Kaiser Permanente Hesperia - Medical Office Building

San Bernardino-Mojave Desert County, Annual

1.0 Project Characteristics

1.1 Land Usage

Land Uses	Size	Metric	Lot Acreage	Floor Surface Area	Population
Medical Office Building	55.00	1000sqft	1.26	55,000.00	0
Parking Lot	275.00	Space	2.47	110,000.00	0
Other Non-Asphalt Surfaces	1.00	Acre	1.00	43,560.00	0

1.2 Other Project Characteristics

Urbanization	Urban	**Wind Speed (m/s)**	2.6	**Precipitation Freq (Days)**	32
Climate Zone	10			**Operational Year**	2020
Utility Company	Southern California Edison				
CO2 Intensity (lb/MWhr)	702.44	**CH4 Intensity (lb/MWhr)**	0.029	**N2O Intensity (lb/MWhr)**	0.006

1.3 User Entered Comments & Non-Default Data

Project Characteristics -

Land Use -

Construction Phase - Default schedule, except assume that architectural coatings applied as part of the building construction process.

Construction Off-road Equipment Mitigation -

Table Name	Column Name	Default Value	New Value
tblConstDustMitigation	WaterUnpavedRoadVehicleSpeed	0	15
tblConstructionPhase	NumDays	18.00	157.00

tblConstructionPhase	PhaseEndDate	2/21/2020	12/5/2019
tblConstructionPhase	PhaseEndDate	1/2/2020	12/5/2019
tblConstructionPhase	PhaseEndDate	2/14/2019	1/17/2019
tblConstructionPhase	PhaseEndDate	1/28/2020	12/31/2019
tblConstructionPhase	PhaseEndDate	2/4/2019	1/7/2019
tblConstructionPhase	PhaseStartDate	1/29/2020	5/1/2019
tblConstructionPhase	PhaseStartDate	2/15/2019	1/18/2019
tblConstructionPhase	PhaseStartDate	2/5/2019	1/8/2019
tblConstructionPhase	PhaseStartDate	1/3/2020	12/6/2019
tblConstructionPhase	PhaseStartDate	1/29/2019	1/1/2019

2.0 Emissions Summary

2.1 Overall Construction

Unmitigated Construction

	ROG	NOx	CO	SO2	Fugitive PM10	Exhaust PM10	PM10 Total	Fugitive PM2.5	Exhaust PM2.5	PM2.5 Total	Bio- CO2	NBio- CO2	Total CO2	CH4	N2O	CO2e
Year	tons/yr										MT/yr					
2019	1.0807	3.4137	2.8157	5.6800e-003	0.1859	0.1801	0.3660	0.0693	0.1696	0.2389	0.0000	508.0970	508.0970	0.0882	0.0000	510.3030
Maximum	**1.0807**	**3.4137**	**2.8157**	**5.6800e-003**	**0.1859**	**0.1801**	**0.3660**	**0.0693**	**0.1696**	**0.2389**	**0.0000**	**508.0970**	**508.0970**	**0.0882**	**0.0000**	**510.3030**

Mitigated Construction

	ROG	NOx	CO	SO2	Fugitive PM10	Exhaust PM10	PM10 Total	Fugitive PM2.5	Exhaust PM2.5	PM2.5 Total	Bio- CO2	NBio- CO2	Total CO2	CH4	N2O	CO2e

Year	tons/yr										MT/yr					
2019	1.0807	3.4137	2.8157	5.6800e-003	0.1466	0.1801	0.3267	0.0482	0.1696	0.2179	0.0000	508.0967	508.0967	0.0882	0.0000	510.3026
Maximum	**1.0807**	**3.4137**	**2.8157**	**5.6800e-003**	**0.1466**	**0.1801**	**0.3267**	**0.0482**	**0.1696**	**0.2179**	**0.0000**	**508.0967**	**508.0967**	**0.0882**	**0.0000**	**510.3026**

	ROG	**NOx**	**CO**	**SO2**	**Fugitive PM10**	**Exhaust PM10**	**PM10 Total**	**Fugitive PM2.5**	**Exhaust PM2.5**	**PM2.5 Total**	**Bio- CO2**	**NBio-CO2**	**Total CO2**	**CH4**	**N20**	**CO2e**
Percent Reduction	**0.00**	**0.00**	**0.00**	**0.00**	**21.12**	**0.00**	**10.73**	**30.40**	**0.00**	**8.81**	**0.00**	**0.00**	**0.00**	**0.00**	**0.00**	**0.00**

Quarter	**Start Date**	**End Date**	**Maximum Unmitigated ROG + NOX (tons/quarter)**	**Maximum Mitigated ROG + NOX (tons/quarter)**
1	**1-1-2019**	**3-31-2019**	0.9711	0.9711
2	**4-1-2019**	**6-30-2019**	1.1569	1.1569
3	**7-1-2019**	**9-30-2019**	1.2890	1.2890
		Highest	1.2890	1.2890

2.2 Overall Operational

Unmitigated Operational

	ROG	NOx	CO	SO2	Fugitive PM10	Exhaust PM10	PM10 Total	Fugitive PM2.5	Exhaust PM2.5	PM2.5 Total	Bio- CO2	NBio- CO2	Total CO2	CH4	N2O	CO2e
Category	tons/yr										MT/yr					
Area	0.2941	3.0000e-005	3.0600e-003	0.0000		1.0000e-005	1.0000e-005		1.0000e-005	1.0000e-005	0.0000	5.9100e-003	5.9100e-003	2.0000e-005	0.0000	6.3100e-003
Energy	1.0300e-003	9.3600e-003	7.8600e-003	6.0000e-005		7.1000e-004	7.1000e-004		7.1000e-004	7.1000e-004	0.0000	189.2816	189.2816	7.5900e-003	1.7200e-003	189.9828
Mobile	0.4745	3.3941	4.8444	0.0165	1.1194	0.0148	1.1342	0.3001	0.0139	0.3140	0.0000	1,524.8033	1,524.8033	0.0992	0.0000	1,527.2820
Waste						0.0000	0.0000		0.0000	0.0000	120.5766	0.0000	120.5766	7.1259	0.0000	298.7235
Water						0.0000	0.0000		0.0000	0.0000	2.1895	33.2858	35.4753	0.2263	5.5900e-003	42.7989
Total	**0.7697**	**3.4035**	**4.8553**	**0.0165**	**1.1194**	**0.0155**	**1.1350**	**0.3001**	**0.0146**	**0.3147**	**122.7661**	**1,747.3766**	**1,870.1428**	**7.4589**	**7.3100e-003**	**2,058.7935**

Mitigated Operational

	ROG	NOx	CO	SO2	Fugitive PM10	Exhaust PM10	PM10 Total	Fugitive PM2.5	Exhaust PM2.5	PM2.5 Total	Bio- CO2	NBio- CO2	Total CO2	CH4	N2O	CO2e
Category	tons/yr										MT/yr					
Area	0.2941	3.0000e-005	3.0600e-003	0.0000		1.0000e-005	1.0000e-005		1.0000e-005	1.0000e-005	0.0000	5.9100e-003	5.9100e-003	2.0000e-005	0.0000	6.3100e-003
Energy	1.0300e-003	9.3600e-003	7.8600e-003	6.0000e-005		7.1000e-004	7.1000e-004		7.1000e-004	7.1000e-004	0.0000	189.2816	189.2816	7.5900e-003	1.7200e-003	189.9828
Mobile	0.4745	3.3941	4.8444	0.0165	1.1194	0.0148	1.1342	0.3001	0.0139	0.3140	0.0000	1,524.8033	1,524.8033	0.0992	0.0000	1,527.2820
Waste						0.0000	0.0000		0.0000	0.0000	120.5766	0.0000	120.5766	7.1259	0.0000	298.7235
Water						0.0000	0.0000		0.0000	0.0000	2.1895	33.2858	35.4753	0.2263	5.5900e-003	42.7989
Total	**0.7697**	**3.4035**	**4.8553**	**0.0165**	**1.1194**	**0.0155**	**1.1350**	**0.3001**	**0.0146**	**0.3147**	**122.7661**	**1,747.3766**	**1,870.1428**	**7.4589**	**7.3100e-003**	**2,058.7935**

	ROG	**NOx**	**CO**	**SO2**	**Fugitive PM10**	**Exhaust PM10**	**PM10 Total**	**Fugitive PM2.5**	**Exhaust PM2.5**	**PM2.5 Total**	**Bio- CO2**	**NBio-CO2**	**Total CO2**	**CH4**	**N20**	**CO2e**
Percent Reduction	**0.00**	**0.00**	**0.00**	**0.00**	**0.00**	**0.00**	**0.00**	**0.00**	**0.00**	**0.00**	**0.00**	**0.00**	**0.00**	**0.00**	**0.00**	**0.00**

3.0 Construction Detail

Construction Phase

Phase Number	Phase Name	Phase Type	Start Date	End Date	Num Days Week	Num Days	Phase Description
1	Site Preparation	Site Preparation	1/1/2019	1/7/2019	5	5	
2	Grading	Grading	1/8/2019	1/17/2019	5	8	
3	Building Construction	Building Construction	1/18/2019	12/5/2019	5	230	
4	Paving	Paving	12/6/2019	12/31/2019	5	18	
5	Architectural Coating	Architectural Coating	5/1/2019	12/5/2019	5	157	

Acres of Grading (Site Preparation Phase): 0

Acres of Grading (Grading Phase): 4

Acres of Paving: 3.47

Residential Indoor: 0; Residential Outdoor: 0; Non-Residential Indoor: 82,500; Non-Residential Outdoor: 27,500; Striped Parking Area:

OffRoad Equipment

Phase Name	Offroad Equipment Type	Amount	Usage Hours	Horse Power	Load Factor
Architectural Coating	Air Compressors	1	6.00	78	0.48
Paving	Cement and Mortar Mixers	2	6.00	9	0.56
Building Construction	Cranes	1	7.00	231	0.29
Building Construction	Forklifts	3	8.00	89	0.20
Grading	Excavators	1	8.00	158	0.38
Paving	Pavers	1	8.00	130	0.42
Paving	Rollers	2	6.00	80	0.38
Grading	Rubber Tired Dozers	1	8.00	247	0.40
Building Construction	Tractors/Loaders/Backhoes	3	7.00	97	0.37
Building Construction	Generator Sets	1	8.00	84	0.74
Grading	Tractors/Loaders/Backhoes	3	8.00	97	0.37
Paving	Tractors/Loaders/Backhoes	1	8.00	97	0.37
Site Preparation	Tractors/Loaders/Backhoes	4	8.00	97	0.37
Grading	Graders	1	8.00	187	0.41
Paving	Paving Equipment	2	6.00	132	0.36
Site Preparation	Rubber Tired Dozers	3	8.00	247	0.40
Building Construction	Welders	1	8.00	46	0.45

Trips and VMT

Phase Name	Offroad Equipment Count	Worker Trip Number	Vendor Trip Number	Hauling Trip Number	Worker Trip Length	Vendor Trip Length	Hauling Trip Length	Worker Vehicle Class	Vendor Vehicle Class	Hauling Vehicle Class
Site Preparation	7	18.00	0.00	0.00	10.80	7.30	20.00	LD_Mix	HDT_Mix	HHDT
Grading	6	15.00	0.00	0.00	10.80	7.30	20.00	LD_Mix	HDT_Mix	HHDT
Building Construction	9	82.00	34.00	0.00	10.80	7.30	20.00	LD_Mix	HDT_Mix	HHDT

Paving	8	20.00	0.00	0.00	10.80	7.30	20.00	LD_Mix	HDT_Mix	HHDT
Architectural Coating	1	16.00	0.00	0.00	10.80	7.30	20.00	LD_Mix	HDT_Mix	HHDT

3.1 Mitigation Measures Construction

Water Exposed Area

Reduce Vehicle Speed on Unpaved Roads

3.2 Site Preparation - 2019

Unmitigated Construction On-Site

	ROG	NOx	CO	SO2	Fugitive PM10	Exhaust PM10	PM10 Total	Fugitive PM2.5	Exhaust PM2.5	PM2.5 Total	Bio- CO2	NBio- CO2	Total CO2	CH4	N2O	CO2e
Category	tons/yr										MT/yr					
Fugitive Dust					0.0452	0.0000	0.0452	0.0248	0.0000	0.0248	0.0000	0.0000	0.0000	0.0000	0.0000	0.0000
Off-Road	0.0108	0.1139	0.0552	9.0000e-005		5.9800e-003	5.9800e-003		5.5000e-003	5.5000e-003	0.0000	8.5422	8.5422	2.7000e-003	0.0000	8.6097
Total	**0.0108**	**0.1139**	**0.0552**	**9.0000e-005**	**0.0452**	**5.9800e-003**	**0.0512**	**0.0248**	**5.5000e-003**	**0.0303**	**0.0000**	**8.5422**	**8.5422**	**2.7000e-003**	**0.0000**	**8.6097**

Unmitigated Construction Off-Site

	ROG	NOx	CO	SO2	Fugitive PM10	Exhaust PM10	PM10 Total	Fugitive PM2.5	Exhaust PM2.5	PM2.5 Total	Bio- CO2	NBio- CO2	Total CO2	CH4	N2O	CO2e
Category	tons/yr										MT/yr					
Hauling	0.0000	0.0000	0.0000	0.0000	0.0000	0.0000	0.0000	0.0000	0.0000	0.0000	0.0000	0.0000	0.0000	0.0000	0.0000	0.0000
Vendor	0.0000	0.0000	0.0000	0.0000	0.0000	0.0000	0.0000	0.0000	0.0000	0.0000	0.0000	0.0000	0.0000	0.0000	0.0000	0.0000
Worker	1.9000e-004	1.5000e-004	1.5000e-003	0.0000	3.6000e-004	0.0000	3.7000e-004	1.0000e-004	0.0000	1.0000e-004	0.0000	0.3232	0.3232	1.0000e-005	0.0000	0.3235

Total	**1.9000e-004**	**1.5000e-004**	**1.5000e-003**	**0.0000**	**3.6000e-004**	**0.0000**	**3.7000e-004**	**1.0000e-004**	**0.0000**	**1.0000e-004**	**0.0000**	**0.3232**	**0.3232**	**1.0000e-005**	**0.0000**	**0.3235**

Mitigated Construction On-Site

	ROG	NOx	CO	SO2	Fugitive PM10	Exhaust PM10	PM10 Total	Fugitive PM2.5	Exhaust PM2.5	PM2.5 Total	Bio- CO2	NBio- CO2	Total CO2	CH4	N2O	CO2e
Category	tons/yr										MT/yr					
Fugitive Dust					0.0203	0.0000	0.0203	0.0112	0.0000	0.0112	0.0000	0.0000	0.0000	0.0000	0.0000	0.0000
Off-Road	0.0108	0.1139	0.0552	9.0000e-005		5.9800e-003	5.9800e-003		5.5000e-003	5.5000e-003	0.0000	8.5422	8.5422	2.7000e-003	0.0000	8.6097
Total	**0.0108**	**0.1139**	**0.0552**	**9.0000e-005**	**0.0203**	**5.9800e-003**	**0.0263**	**0.0112**	**5.5000e-003**	**0.0167**	**0.0000**	**8.5422**	**8.5422**	**2.7000e-003**	**0.0000**	**8.6097**

Mitigated Construction Off-Site

	ROG	NOx	CO	SO2	Fugitive PM10	Exhaust PM10	PM10 Total	Fugitive PM2.5	Exhaust PM2.5	PM2.5 Total	Bio- CO2	NBio- CO2	Total CO2	CH4	N2O	CO2e
Category	tons/yr										MT/yr					
Hauling	0.0000	0.0000	0.0000	0.0000	0.0000	0.0000	0.0000	0.0000	0.0000	0.0000	0.0000	0.0000	0.0000	0.0000	0.0000	0.0000
Vendor	0.0000	0.0000	0.0000	0.0000	0.0000	0.0000	0.0000	0.0000	0.0000	0.0000	0.0000	0.0000	0.0000	0.0000	0.0000	0.0000
Worker	1.9000e-004	1.5000e-004	1.5000e-003	0.0000	3.6000e-004	0.0000	3.7000e-004	1.0000e-004	0.0000	1.0000e-004	0.0000	0.3232	0.3232	1.0000e-005	0.0000	0.3235
Total	**1.9000e-004**	**1.5000e-004**	**1.5000e-003**	**0.0000**	**3.6000e-004**	**0.0000**	**3.7000e-004**	**1.0000e-004**	**0.0000**	**1.0000e-004**	**0.0000**	**0.3232**	**0.3232**	**1.0000e-005**	**0.0000**	**0.3235**

3.3 Grading - 2019

Unmitigated Construction On-Site

	ROG	NOx	CO	SO2	Fugitive PM10	Exhaust PM10	PM10 Total	Fugitive PM2.5	Exhaust PM2.5	PM2.5 Total	Bio- CO2	NBio- CO2	Total CO2	CH4	N2O	CO2e
Category	tons/yr										MT/yr					
Fugitive Dust					0.0262	0.0000	0.0262	0.0135	0.0000	0.0135	0.0000	0.0000	0.0000	0.0000	0.0000	0.0000
Off-Road	0.0103	0.1134	0.0652	1.2000e-004		5.5900e-003	5.5900e-003		5.1400e-003	5.1400e-003	0.0000	10.6569	10.6569	3.3700e-003	0.0000	10.7412
Total	**0.0103**	**0.1134**	**0.0652**	**1.2000e-004**	**0.0262**	**5.5900e-003**	**0.0318**	**0.0135**	**5.1400e-003**	**0.0186**	**0.0000**	**10.6569**	**10.6569**	**3.3700e-003**	**0.0000**	**10.7412**

Unmitigated Construction Off-Site

	ROG	NOx	CO	SO2	Fugitive PM10	Exhaust PM10	PM10 Total	Fugitive PM2.5	Exhaust PM2.5	PM2.5 Total	Bio- CO2	NBio- CO2	Total CO2	CH4	N2O	CO2e
Category	tons/yr										MT/yr					
Hauling	0.0000	0.0000	0.0000	0.0000	0.0000	0.0000	0.0000	0.0000	0.0000	0.0000	0.0000	0.0000	0.0000	0.0000	0.0000	0.0000
Vendor	0.0000	0.0000	0.0000	0.0000	0.0000	0.0000	0.0000	0.0000	0.0000	0.0000	0.0000	0.0000	0.0000	0.0000	0.0000	0.0000
Worker	2.6000e-004	2.0000e-004	2.0000e-003	0.0000	4.8000e-004	0.0000	4.9000e-004	1.3000e-004	0.0000	1.3000e-004	0.0000	0.4310	0.4310	1.0000e-005	0.0000	0.4313
Total	**2.6000e-004**	**2.0000e-004**	**2.0000e-003**	**0.0000**	**4.8000e-004**	**0.0000**	**4.9000e-004**	**1.3000e-004**	**0.0000**	**1.3000e-004**	**0.0000**	**0.4310**	**0.4310**	**1.0000e-005**	**0.0000**	**0.4313**

Mitigated Construction On-Site

	ROG	NOx	CO	SO2	Fugitive PM10	Exhaust PM10	PM10 Total	Fugitive PM2.5	Exhaust PM2.5	PM2.5 Total	Bio- CO2	NBio- CO2	Total CO2	CH4	N2O	CO2e
Category	tons/yr										MT/yr					

Fugitive Dust					0.0118	0.0000	0.0118	6.0600e-003	0.0000	6.0600e-003	0.0000	0.0000	0.0000	0.0000	0.0000	0.0000
Off-Road	0.0103	0.1134	0.0652	1.2000e-004		5.5900e-003	5.5900e-003		5.1400e-003	5.1400e-003	0.0000	10.6569	10.6569	3.3700e-003	0.0000	10.7412
Total	**0.0103**	**0.1134**	**0.0652**	**1.2000e-004**	**0.0118**	**5.5900e-003**	**0.0174**	**6.0600e-003**	**5.1400e-003**	**0.0112**	**0.0000**	**10.6569**	**10.6569**	**3.3700e-003**	**0.0000**	**10.7412**

Mitigated Construction Off-Site

	ROG	NOx	CO	SO2	Fugitive PM10	Exhaust PM10	PM10 Total	Fugitive PM2.5	Exhaust PM2.5	PM2.5 Total	Bio- CO2	NBio- CO2	Total CO2	CH4	N2O	CO2e
Category	tons/yr										MT/yr					
Hauling	0.0000	0.0000	0.0000	0.0000	0.0000	0.0000	0.0000	0.0000	0.0000	0.0000	0.0000	0.0000	0.0000	0.0000	0.0000	0.0000
Vendor	0.0000	0.0000	0.0000	0.0000	0.0000	0.0000	0.0000	0.0000	0.0000	0.0000	0.0000	0.0000	0.0000	0.0000	0.0000	0.0000
Worker	2.6000e-004	2.0000e-004	2.0000e-003	0.0000	4.8000e-004	0.0000	4.9000e-004	1.3000e-004	0.0000	1.3000e-004	0.0000	0.4310	0.4310	1.0000e-005	0.0000	0.4313
Total	**2.6000e-004**	**2.0000e-004**	**2.0000e-003**	**0.0000**	**4.8000e-004**	**0.0000**	**4.9000e-004**	**1.3000e-004**	**0.0000**	**1.3000e-004**	**0.0000**	**0.4310**	**0.4310**	**1.0000e-005**	**0.0000**	**0.4313**

3.4 Building Construction - 2019

Unmitigated Construction On-Site

	ROG	NOx	CO	SO2	Fugitive PM10	Exhaust PM10	PM10 Total	Fugitive PM2.5	Exhaust PM2.5	PM2.5 Total	Bio- CO2	NBio- CO2	Total CO2	CH4	N2O	CO2e
Category	tons/yr										MT/yr					
Off-Road	0.2715	2.4241	1.9738	3.0900e-003		0.1483	0.1483		0.1395	0.1395	0.0000	270.3698	270.3698	0.0659	0.0000	272.0164
Total	**0.2715**	**2.4241**	**1.9738**	**3.0900e-003**		**0.1483**	**0.1483**		**0.1395**	**0.1395**	**0.0000**	**270.3698**	**270.3698**	**0.0659**	**0.0000**	**272.0164**

Unmitigated Construction Off-Site

	ROG	NOx	CO	SO2	Fugitive PM10	Exhaust PM10	PM10 Total	Fugitive PM2.5	Exhaust PM2.5	PM2.5 Total	Bio- CO2	NBio- CO2	Total CO2	CH4	N2O	CO2e
Category	tons/yr										MT/yr					
Hauling	0.0000	0.0000	0.0000	0.0000	0.0000	0.0000	0.0000	0.0000	0.0000	0.0000	0.0000	0.0000	0.0000	0.0000	0.0000	0.0000
Vendor	0.0147	0.4668	0.1011	1.0900e-003	0.0261	2.9900e-003	0.0291	7.5300e-003	2.8600e-003	0.0104	0.0000	104.6356	104.6356	7.3100e-003	0.0000	104.8182
Worker	0.0404	0.0314	0.3138	7.5000e-004	0.0760	5.4000e-004	0.0765	0.0202	5.0000e-004	0.0207	0.0000	67.7312	67.7312	2.3000e-003	0.0000	67.7886
Total	**0.0551**	**0.4982**	**0.4149**	**1.8400e-003**	**0.1021**	**3.5300e-003**	**0.1056**	**0.0277**	**3.3600e-003**	**0.0311**	**0.0000**	**172.3668**	**172.3668**	**9.6100e-003**	**0.0000**	**172.6068**

Mitigated Construction On-Site

	ROG	NOx	CO	SO2	Fugitive PM10	Exhaust PM10	PM10 Total	Fugitive PM2.5	Exhaust PM2.5	PM2.5 Total	Bio- CO2	NBio- CO2	Total CO2	CH4	N2O	CO2e
Category	tons/yr										MT/yr					
Off-Road	0.2715	2.4241	1.9738	3.0900e-003		0.1483	0.1483		0.1395	0.1395	0.0000	270.3695	270.3695	0.0659	0.0000	272.0161
Total	**0.2715**	**2.4241**	**1.9738**	**3.0900e-003**		**0.1483**	**0.1483**		**0.1395**	**0.1395**	**0.0000**	**270.3695**	**270.3695**	**0.0659**	**0.0000**	**272.0161**

Mitigated Construction Off-Site

	ROG	NOx	CO	SO2	Fugitive PM10	Exhaust PM10	PM10 Total	Fugitive PM2.5	Exhaust PM2.5	PM2.5 Total	Bio- CO2	NBio- CO2	Total CO2	CH4	N2O	CO2e

Category	tons/yr										MT/yr					
Hauling	0.0000	0.0000	0.0000	0.0000	0.0000	0.0000	0.0000	0.0000	0.0000	0.0000	0.0000	0.0000	0.0000	0.0000	0.0000	0.0000
Vendor	0.0147	0.4668	0.1011	1.0900e-003	0.0261	2.9900e-003	0.0291	7.5300e-003	2.8600e-003	0.0104	0.0000	104.6356	104.6356	7.3100e-003	0.0000	104.8182
Worker	0.0404	0.0314	0.3138	7.5000e-004	0.0760	5.4000e-004	0.0765	0.0202	5.0000e-004	0.0207	0.0000	67.7312	67.7312	2.3000e-003	0.0000	67.7886
Total	**0.0551**	**0.4982**	**0.4149**	**1.8400e-003**	**0.1021**	**3.5300e-003**	**0.1056**	**0.0277**	**3.3600e-003**	**0.0311**	**0.0000**	**172.3668**	**172.3668**	**9.6100e-003**	**0.0000**	**172.6068**

3.5 Paving - 2019

Unmitigated Construction On-Site

	ROG	NOx	CO	SO2	Fugitive PM10	Exhaust PM10	PM10 Total	Fugitive PM2.5	Exhaust PM2.5	PM2.5 Total	Bio- CO2	NBio- CO2	Total CO2	CH4	N2O	CO2e
Category	tons/yr										MT/yr					
Off-Road	0.0114	0.1148	0.1108	1.7000e-004		6.4800e-003	6.4800e-003		5.9700e-003	5.9700e-003	0.0000	15.0501	15.0501	4.6300e-003	0.0000	15.1658
Paving	3.2400e-003					0.0000	0.0000		0.0000	0.0000	0.0000	0.0000	0.0000	0.0000	0.0000	0.0000
Total	**0.0147**	**0.1148**	**0.1108**	**1.7000e-004**		**6.4800e-003**	**6.4800e-003**		**5.9700e-003**	**5.9700e-003**	**0.0000**	**15.0501**	**15.0501**	**4.6300e-003**	**0.0000**	**15.1658**

Unmitigated Construction Off-Site

	ROG	NOx	CO	SO2	Fugitive PM10	Exhaust PM10	PM10 Total	Fugitive PM2.5	Exhaust PM2.5	PM2.5 Total	Bio- CO2	NBio- CO2	Total CO2	CH4	N2O	CO2e
Category	tons/yr										MT/yr					
Hauling	0.0000	0.0000	0.0000	0.0000	0.0000	0.0000	0.0000	0.0000	0.0000	0.0000	0.0000	0.0000	0.0000	0.0000	0.0000	0.0000
Vendor	0.0000	0.0000	0.0000	0.0000	0.0000	0.0000	0.0000	0.0000	0.0000	0.0000	0.0000	0.0000	0.0000	0.0000	0.0000	0.0000
Worker	7.7000e-004	6.0000e-004	5.9900e-003	1.0000e-005	1.4500e-003	1.0000e-005	1.4600e-003	3.9000e-004	1.0000e-005	3.9000e-004	0.0000	1.2929	1.2929	4.0000e-005	0.0000	1.2940

Total	**7.7000e-004**	**6.0000e-004**	**5.9900e-003**	**1.0000e-005**	**1.4500e-003**	**1.0000e-005**	**1.4600e-003**	**3.9000e-004**	**1.0000e-005**	**3.9000e-004**	**0.0000**	**1.2929**	**1.2929**	**4.0000e-005**	**0.0000**	**1.2940**

Mitigated Construction On-Site

	ROG	NOx	CO	SO2	Fugitive PM10	Exhaust PM10	PM10 Total	Fugitive PM2.5	Exhaust PM2.5	PM2.5 Total	Bio- CO2	NBio- CO2	Total CO2	CH4	N2O	CO2e
Category	tons/yr										MT/yr					
Off-Road	0.0114	0.1148	0.1108	1.7000e-004		6.4800e-003	6.4800e-003		5.9700e-003	5.9700e-003	0.0000	15.0501	15.0501	4.6300e-003	0.0000	15.1658
Paving	3.2400e-003					0.0000	0.0000		0.0000	0.0000	0.0000	0.0000	0.0000	0.0000	0.0000	0.0000
Total	**0.0147**	**0.1148**	**0.1108**	**1.7000e-004**		**6.4800e-003**	**6.4800e-003**		**5.9700e-003**	**5.9700e-003**	**0.0000**	**15.0501**	**15.0501**	**4.6300e-003**	**0.0000**	**15.1658**

Mitigated Construction Off-Site

	ROG	NOx	CO	SO2	Fugitive PM10	Exhaust PM10	PM10 Total	Fugitive PM2.5	Exhaust PM2.5	PM2.5 Total	Bio- CO2	NBio- CO2	Total CO2	CH4	N2O	CO2e
Category	tons/yr										MT/yr					
Hauling	0.0000	0.0000	0.0000	0.0000	0.0000	0.0000	0.0000	0.0000	0.0000	0.0000	0.0000	0.0000	0.0000	0.0000	0.0000	0.0000
Vendor	0.0000	0.0000	0.0000	0.0000	0.0000	0.0000	0.0000	0.0000	0.0000	0.0000	0.0000	0.0000	0.0000	0.0000	0.0000	0.0000
Worker	7.7000e-004	6.0000e-004	5.9900e-003	1.0000e-005	1.4500e-003	1.0000e-005	1.4600e-003	3.9000e-004	1.0000e-005	3.9000e-004	0.0000	1.2929	1.2929	4.0000e-005	0.0000	1.2940
Total	**7.7000e-004**	**6.0000e-004**	**5.9900e-003**	**1.0000e-005**	**1.4500e-003**	**1.0000e-005**	**1.4600e-003**	**3.9000e-004**	**1.0000e-005**	**3.9000e-004**	**0.0000**	**1.2929**	**1.2929**	**4.0000e-005**	**0.0000**	**1.2940**

3.6 Architectural Coating - 2019

Unmitigated Construction On-Site

	ROG	NOx	CO	SO2	Fugitive PM10	Exhaust PM10	PM10 Total	Fugitive PM2.5	Exhaust PM2.5	PM2.5 Total	Bio- CO2	NBio- CO2	Total CO2	CH4	N2O	CO2e
Category	tons/yr										MT/yr					
Archit. Coating	0.6907					0.0000	0.0000		0.0000	0.0000	0.0000	0.0000	0.0000	0.0000	0.0000	0.0000
Off-Road	0.0209	0.1441	0.1445	2.3000e-004		0.0101	0.0101		0.0101	0.0101	0.0000	20.0430	20.0430	1.6900e-003	0.0000	20.0854
Total	**0.7116**	**0.1441**	**0.1445**	**2.3000e-004**		**0.0101**	**0.0101**		**0.0101**	**0.0101**	**0.0000**	**20.0430**	**20.0430**	**1.6900e-003**	**0.0000**	**20.0854**

Unmitigated Construction Off-Site

	ROG	NOx	CO	SO2	Fugitive PM10	Exhaust PM10	PM10 Total	Fugitive PM2.5	Exhaust PM2.5	PM2.5 Total	Bio- CO2	NBio- CO2	Total CO2	CH4	N2O	CO2e
Category	tons/yr										MT/yr					
Hauling	0.0000	0.0000	0.0000	0.0000	0.0000	0.0000	0.0000	0.0000	0.0000	0.0000	0.0000	0.0000	0.0000	0.0000	0.0000	0.0000
Vendor	0.0000	0.0000	0.0000	0.0000	0.0000	0.0000	0.0000	0.0000	0.0000	0.0000	0.0000	0.0000	0.0000	0.0000	0.0000	0.0000
Worker	5.3800e-003	4.1800e-003	0.0418	1.0000e-004	0.0101	7.0000e-005	0.0102	2.6900e-003	7.0000e-005	2.7500e-003	0.0000	9.0213	9.0213	3.1000e-004	0.0000	9.0289
Total	**5.3800e-003**	**4.1800e-003**	**0.0418**	**1.0000e-004**	**0.0101**	**7.0000e-005**	**0.0102**	**2.6900e-003**	**7.0000e-005**	**2.7500e-003**	**0.0000**	**9.0213**	**9.0213**	**3.1000e-004**	**0.0000**	**9.0289**

Mitigated Construction On-Site

	ROG	NOx	CO	SO2	Fugitive PM10	Exhaust PM10	PM10 Total	Fugitive PM2.5	Exhaust PM2.5	PM2.5 Total	Bio- CO2	NBio- CO2	Total CO2	CH4	N2O	CO2e
Category	tons/yr										MT/yr					

Archit. Coating	0.6907					0.0000	0.0000		0.0000	0.0000	0.0000	0.0000	0.0000	0.0000	0.0000	0.0000
Off-Road	0.0209	0.1441	0.1445	2.3000e-004		0.0101	0.0101		0.0101	0.0101	0.0000	20.0430	20.0430	1.6900e-003	0.0000	20.0853
Total	**0.7116**	**0.1441**	**0.1445**	**2.3000e-004**		**0.0101**	**0.0101**		**0.0101**	**0.0101**	**0.0000**	**20.0430**	**20.0430**	**1.6900e-003**	**0.0000**	**20.0853**

Mitigated Construction Off-Site

	ROG	NOx	CO	SO2	Fugitive PM10	Exhaust PM10	PM10 Total	Fugitive PM2.5	Exhaust PM2.5	PM2.5 Total	Bio- CO2	NBio- CO2	Total CO2	CH4	N2O	CO2e
Category	tons/yr										MT/yr					
Hauling	0.0000	0.0000	0.0000	0.0000	0.0000	0.0000	0.0000	0.0000	0.0000	0.0000	0.0000	0.0000	0.0000	0.0000	0.0000	0.0000
Vendor	0.0000	0.0000	0.0000	0.0000	0.0000	0.0000	0.0000	0.0000	0.0000	0.0000	0.0000	0.0000	0.0000	0.0000	0.0000	0.0000
Worker	5.3800e-003	4.1800e-003	0.0418	1.0000e-004	0.0101	7.0000e-005	0.0102	2.6900e-003	7.0000e-005	2.7500e-003	0.0000	9.0213	9.0213	3.1000e-004	0.0000	9.0289
Total	**5.3800e-003**	**4.1800e-003**	**0.0418**	**1.0000e-004**	**0.0101**	**7.0000e-005**	**0.0102**	**2.6900e-003**	**7.0000e-005**	**2.7500e-003**	**0.0000**	**9.0213**	**9.0213**	**3.1000e-004**	**0.0000**	**9.0289**

4.0 Operational Detail - Mobile

4.1 Mitigation Measures Mobile

	ROG	NOx	CO	SO2	Fugitive PM10	Exhaust PM10	PM10 Total	Fugitive PM2.5	Exhaust PM2.5	PM2.5 Total	Bio- CO2	NBio- CO2	Total CO2	CH4	N2O	CO2e
Category	tons/yr										MT/yr					
Mitigated	0.4745	3.3941	4.8444	0.0165	1.1194	0.0148	1.1342	0.3001	0.0139	0.3140	0.0000	1,524.8033	1,524.8033	0.0992	0.0000	1,527.2820

Unmitigated	0.4745	3.3941	4.8444	0.0165	1.1194	0.0148	1.1342	0.3001	0.0139	0.3140	0.0000	1,524.8033	1,524.8033	0.0992	0.0000	1,527.2820

4.2 Trip Summary Information

	Average Daily Trip Rate			Unmitigated	Mitigated
Land Use	Weekday	Saturday	Sunday	Annual VMT	Annual VMT
Medical Office Building	1,987.15	492.80	85.25	2,939,733	2,939,733
Other Non-Asphalt Surfaces	0.00	0.00	0.00		
Parking Lot	0.00	0.00	0.00		
Total	1,987.15	492.80	85.25	2,939,733	2,939,733

4.3 Trip Type Information

	Miles			Trip %			Trip Purpose %		
Land Use	H-W or C-W	H-S or C-C	H-O or C-NW	H-W or C-W	H-S or C-C	H-O or C-NW	Primary	Diverted	Pass-by
Medical Office Building	9.50	7.30	7.30	29.60	51.40	19.00	60	30	10
Other Non-Asphalt Surfaces	9.50	7.30	7.30	0.00	0.00	0.00	0	0	0
Parking Lot	9.50	7.30	7.30	0.00	0.00	0.00	0	0	0

4.4 Fleet Mix

Land Use	LDA	LDT1	LDT2	MDV	LHD1	LHD2	MHD	HHD	OBUS	UBUS	MCY	SBUS	MH
Medical Office Building	0.546179	0.037976	0.179086	0.122965	0.018430	0.005460	0.017497	0.061396	0.001337	0.001657	0.006117	0.000817	0.001082
Other Non-Asphalt Surfaces	0.546179	0.037976	0.179086	0.122965	0.018430	0.005460	0.017497	0.061396	0.001337	0.001657	0.006117	0.000817	0.001082
Parking Lot	0.546179	0.037976	0.179086	0.122965	0.018430	0.005460	0.017497	0.061396	0.001337	0.001657	0.006117	0.000817	0.001082

5.0 Energy Detail

Historical Energy Use: N

5.1 Mitigation Measures Energy

	ROG	NOx	CO	SO2	Fugitive PM10	Exhaust PM10	PM10 Total	Fugitive PM2.5	Exhaust PM2.5	PM2.5 Total	Bio- CO2	NBio- CO2	Total CO2	CH4	N2O	CO2e
Category	tons/yr										MT/yr					
Electricity Mitigated						0.0000	0.0000		0.0000	0.0000	0.0000	179.0971	179.0971	7.3900e-003	1.5300e-003	179.7378
Electricity Unmitigated						0.0000	0.0000		0.0000	0.0000	0.0000	179.0971	179.0971	7.3900e-003	1.5300e-003	179.7378
NaturalGas Mitigated	1.0300e-003	9.3600e-003	7.8600e-003	6.0000e-005		7.1000e-004	7.1000e-004		7.1000e-004	7.1000e-004	0.0000	10.1845	10.1845	2.0000e-004	1.9000e-004	10.2450
NaturalGas Unmitigated	1.0300e-003	9.3600e-003	7.8600e-003	6.0000e-005		7.1000e-004	7.1000e-004		7.1000e-004	7.1000e-004	0.0000	10.1845	10.1845	2.0000e-004	1.9000e-004	10.2450

5.2 Energy by Land Use - NaturalGas

Unmitigated

	NaturalGas Use	ROG	NOx	CO	SO2	Fugitive PM10	Exhaust PM10	PM10 Total	Fugitive PM2.5	Exhaust PM2.5	PM2.5 Total	Bio- CO2	NBio- CO2	Total CO2	CH4	N2O	CO2e
Land Use	kBTU/yr	tons/yr										MT/yr					
Medical Office Building	190850	1.0300e-003	9.3600e-003	7.8600e-003	6.0000e-005		7.1000e-004	7.1000e-004		7.1000e-004	7.1000e-004	0.0000	10.1845	10.1845	2.0000e-004	1.9000e-004	10.2450
Other Non-Asphalt Surfaces	0	0.0000	0.0000	0.0000	0.0000		0.0000	0.0000		0.0000	0.0000	0.0000	0.0000	0.0000	0.0000	0.0000	0.0000
Parking Lot	0	0.0000	0.0000	0.0000	0.0000		0.0000	0.0000		0.0000	0.0000	0.0000	0.0000	0.0000	0.0000	0.0000	0.0000
Total		**1.0300e-003**	**9.3600e-003**	**7.8600e-003**	**6.0000e-005**		**7.1000e-004**	**7.1000e-004**		**7.1000e-004**	**7.1000e-004**	**0.0000**	**10.1845**	**10.1845**	**2.0000e-004**	**1.9000e-004**	**10.2450**

Mitigated

	NaturalGas Use	ROG	NOx	CO	SO2	Fugitive PM10	Exhaust PM10	PM10 Total	Fugitive PM2.5	Exhaust PM2.5	PM2.5 Total	Bio- CO2	NBio- CO2	Total CO2	CH4	N2O	CO2e
Land Use	kBTU/yr	tons/yr										MT/yr					
Medical Office Building	190850	1.0300e-003	9.3600e-003	7.8600e-003	6.0000e-005		7.1000e-004	7.1000e-004		7.1000e-004	7.1000e-004	0.0000	10.1845	10.1845	2.0000e-004	1.9000e-004	10.2450

Other Non-Asphalt Surfaces	0	0.0000	0.0000	0.0000	0.0000		0.0000	0.0000		0.0000	0.0000	0.0000	0.0000	0.0000	0.0000	0.0000	0.0000
Parking Lot	0	0.0000	0.0000	0.0000	0.0000		0.0000	0.0000		0.0000	0.0000	0.0000	0.0000	0.0000	0.0000	0.0000	0.0000
Total		**1.0300e-003**	**9.3600e-003**	**7.8600e-003**	**6.0000e-005**		**7.1000e-004**	**7.1000e-004**		**7.1000e-004**	**7.1000e-004**	**0.0000**	**10.1845**	**10.1845**	**2.0000e-004**	**1.9000e-004**	**10.2450**

5.3 Energy by Land Use - Electricity

Unmitigated

	Electricity Use	Total CO2	CH4	N2O	CO2e
Land Use	kWh/yr	MT/yr			
Medical Office Building	523600	166.8302	6.8900e-003	1.4300e-003	167.4270
Other Non-Asphalt Surfaces	0	0.0000	0.0000	0.0000	0.0000
Parking Lot	38500	12.2669	5.1000e-004	1.0000e-004	12.3108
Total		**179.0971**	**7.4000e-003**	**1.5300e-003**	**179.7378**

Mitigated

	Electricity Use	Total CO2	CH4	N2O	CO2e
Land Use	kWh/yr	MT/yr			
Medical Office Building	523600	166.8302	6.8900e-003	1.4300e-003	167.4270
Other Non-Asphalt Surfaces	0	0.0000	0.0000	0.0000	0.0000
Parking Lot	38500	12.2669	5.1000e-004	1.0000e-004	12.3108
Total		**179.0971**	**7.4000e-003**	**1.5300e-003**	**179.7378**

6.0 Area Detail

6.1 Mitigation Measures Area

	ROG	NOx	CO	SO2	Fugitive PM10	Exhaust PM10	PM10 Total	Fugitive PM2.5	Exhaust PM2.5	PM2.5 Total	Bio- CO2	NBio- CO2	Total CO2	CH4	N2O	CO2e
Category	tons/yr										MT/yr					
Mitigated	0.2941	3.0000e-005	3.0600e-003	0.0000		1.0000e-005	1.0000e-005		1.0000e-005	1.0000e-005	0.0000	5.9100e-003	5.9100e-003	2.0000e-005	0.0000	6.3100e-003
Unmitigated	0.2941	3.0000e-005	3.0600e-003	0.0000		1.0000e-005	1.0000e-005		1.0000e-005	1.0000e-005	0.0000	5.9100e-003	5.9100e-003	2.0000e-005	0.0000	6.3100e-003

6.2 Area by SubCategory

Unmitigated

	ROG	NOx	CO	SO2	Fugitive PM10	Exhaust PM10	PM10 Total	Fugitive PM2.5	Exhaust PM2.5	PM2.5 Total	Bio- CO2	NBio- CO2	Total CO2	CH4	N2O	CO2e
SubCategory	tons/yr										MT/yr					
Architectural Coating	0.0691					0.0000	0.0000		0.0000	0.0000	0.0000	0.0000	0.0000	0.0000	0.0000	0.0000
Consumer Products	0.2247					0.0000	0.0000		0.0000	0.0000	0.0000	0.0000	0.0000	0.0000	0.0000	0.0000
Landscaping	2.9000e-004	3.0000e-005	3.0600e-003	0.0000		1.0000e-005	1.0000e-005		1.0000e-005	1.0000e-005	0.0000	5.9100e-003	5.9100e-003	2.0000e-005	0.0000	6.3100e-003
Total	**0.2941**	**3.0000e-005**	**3.0600e-003**	**0.0000**		**1.0000e-005**	**1.0000e-005**		**1.0000e-005**	**1.0000e-005**	**0.0000**	**5.9100e-003**	**5.9100e-003**	**2.0000e-005**	**0.0000**	**6.3100e-003**

Mitigated

	ROG	NOx	CO	SO2	Fugitive PM10	Exhaust PM10	PM10 Total	Fugitive PM2.5	Exhaust PM2.5	PM2.5 Total	Bio- CO2	NBio- CO2	Total CO2	CH4	N2O	CO2e
SubCategory	tons/yr										MT/yr					
Architectural Coating	0.0691					0.0000	0.0000		0.0000	0.0000	0.0000	0.0000	0.0000	0.0000	0.0000	0.0000
Consumer Products	0.2247					0.0000	0.0000		0.0000	0.0000	0.0000	0.0000	0.0000	0.0000	0.0000	0.0000
Landscaping	2.9000e-004	3.0000e-005	3.0600e-003	0.0000		1.0000e-005	1.0000e-005		1.0000e-005	1.0000e-005	0.0000	5.9100e-003	5.9100e-003	2.0000e-005	0.0000	6.3100e-003
Total	**0.2941**	**3.0000e-005**	**3.0600e-003**	**0.0000**		**1.0000e-005**	**1.0000e-005**		**1.0000e-005**	**1.0000e-005**	**0.0000**	**5.9100e-003**	**5.9100e-003**	**2.0000e-005**	**0.0000**	**6.3100e-003**

7.0 Water Detail

7.1 Mitigation Measures Water

	Total CO2	CH4	N2O	CO2e
Category	MT/yr			
Mitigated	35.4753	0.2263	5.5900e-003	42.7989
Unmitigated	35.4753	0.2263	5.5900e-003	42.7989

7.2 Water by Land Use

Unmitigated

	Indoor/Outdoor Use	Total CO2	CH4	N2O	CO2e
Land Use	Mgal	MT/yr			
Medical Office Building	6.90143 / 1.31456	35.4753	0.2263	5.5900e-003	42.7989
Other Non-Asphalt Surfaces	0 / 0	0.0000	0.0000	0.0000	0.0000
Parking Lot	0 / 0	0.0000	0.0000	0.0000	0.0000
Total		**35.4753**	**0.2263**	**5.5900e-003**	**42.7989**

Mitigated

	Indoor/Outdoor Use	Total CO2	CH4	N2O	CO2e
Land Use	Mgal	MT/yr			
Medical Office Building	6.90143 / 1.31456	35.4753	0.2263	5.5900e-003	42.7989
Other Non-Asphalt Surfaces	0 / 0	0.0000	0.0000	0.0000	0.0000
Parking Lot	0 / 0	0.0000	0.0000	0.0000	0.0000
Total		**35.4753**	**0.2263**	**5.5900e-003**	**42.7989**

8.0 Waste Detail

8.1 Mitigation Measures Waste

Category/Year

	Total CO2	CH4	N2O	CO2e
	MT/yr			
Mitigated	120.5766	7.1259	0.0000	298.7235
Unmitigated	120.5766	7.1259	0.0000	298.7235

8.2 Waste by Land Use

Unmitigated

	Waste Disposed	Total CO2	CH4	N2O	CO2e
Land Use	tons	MT/yr			
Medical Office Building	594	120.5766	7.1259	0.0000	298.7235
Other Non-Asphalt Surfaces	0	0.0000	0.0000	0.0000	0.0000
Parking Lot	0	0.0000	0.0000	0.0000	0.0000
Total		**120.5766**	**7.1259**	**0.0000**	**298.7235**

Mitigated

	Waste Disposed	Total CO2	CH4	N2O	CO2e
Land Use	tons	MT/yr			
Medical Office Building	594	120.5766	7.1259	0.0000	298.7235
Other Non-Asphalt Surfaces	0	0.0000	0.0000	0.0000	0.0000

Parking Lot	0	0.0000	0.0000	0.0000	0.0000
Total		**120.5766**	**7.1259**	**0.0000**	**298.7235**

9.0 Operational Offroad

Equipment Type	Number	Hours/Day	Days/Year	Horse Power	Load Factor	Fuel Type

10.0 Stationary Equipment

Fire Pumps and Emergency Generators

Equipment Type	Number	Hours/Day	Hours/Year	Horse Power	Load Factor	Fuel Type

Boilers

Equipment Type	Number	Heat Input/Day	Heat Input/Year	Boiler Rating	Fuel Type

User Defined Equipment

Equipment Type	Number

11.0 Vegetation

Kaiser Permanente Hesperia - Medical Office Building

San Bernardino-Mojave Desert County, Summer

1.0 Project Characteristics

1.1 Land Usage

Land Uses	Size	Metric	Lot Acreage	Floor Surface Area	Population
Medical Office Building	55.00	1000sqft	1.26	55,000.00	0
Parking Lot	275.00	Space	2.47	110,000.00	0
Other Non-Asphalt Surfaces	1.00	Acre	1.00	43,560.00	0

1.2 Other Project Characteristics

Urbanization	Urban	**Wind Speed (m/s)**	2.6	**Precipitation Freq (Days)**	32
Climate Zone	10			**Operational Year**	2020
Utility Company	Southern California Edison				
CO2 Intensity (lb/MWhr)	702.44	**CH4 Intensity (lb/MWhr)**	0.029	**N2O Intensity (lb/MWhr)**	0.006

1.3 User Entered Comments & Non-Default Data

Project Characteristics -

Land Use -

Construction Phase - Default schedule, except assume that architectural coatings applied as part of the building construction process.

Construction Off-road Equipment Mitigation -

Table Name	Column Name	Default Value	New Value
tblConstDustMitigation	WaterUnpavedRoadVehicleSpeed	0	15
tblConstructionPhase	NumDays	18.00	157.00

tblConstructionPhase	PhaseEndDate	2/21/2020	12/5/2019
tblConstructionPhase	PhaseEndDate	1/2/2020	12/5/2019
tblConstructionPhase	PhaseEndDate	2/14/2019	1/17/2019
tblConstructionPhase	PhaseEndDate	1/28/2020	12/31/2019
tblConstructionPhase	PhaseEndDate	2/4/2019	1/7/2019
tblConstructionPhase	PhaseStartDate	1/29/2020	5/1/2019
tblConstructionPhase	PhaseStartDate	2/15/2019	1/18/2019
tblConstructionPhase	PhaseStartDate	2/5/2019	1/8/2019
tblConstructionPhase	PhaseStartDate	1/3/2020	12/6/2019
tblConstructionPhase	PhaseStartDate	1/29/2019	1/1/2019

2.0 Emissions Summary

2.1 Overall Construction (Maximum Daily Emission)

Unmitigated Construction

	ROG	NOx	CO	SO2	Fugitive PM10	Exhaust PM10	PM10 Total	Fugitive PM2.5	Exhaust PM2.5	PM2.5 Total	Bio- CO2	NBio- CO2	Total CO2	CH4	N2O	CO2e
Year	lb/day										lb/day					
2019	12.0246	45.6268	23.5431	0.0481	18.2141	2.3914	20.6055	9.9699	2.2001	12.1700	0.0000	4,737.8288	4,737.8288	1.1970	0.0000	4,756.6016
Maximum	**12.0246**	**45.6268**	**23.5431**	**0.0481**	**18.2141**	**2.3914**	**20.6055**	**9.9699**	**2.2001**	**12.1700**	**0.0000**	**4,737.8288**	**4,737.8288**	**1.1970**	**0.0000**	**4,756.6016**

Mitigated Construction

	ROG	NOx	CO	SO2	Fugitive PM10	Exhaust PM10	PM10 Total	Fugitive PM2.5	Exhaust PM2.5	PM2.5 Total	Bio- CO2	NBio- CO2	Total CO2	CH4	N2O	CO2e

Year	lb/day										lb/day					
2019	12.0246	45.6268	23.5431	0.0481	8.2777	2.3914	10.6691	4.5080	2.2001	6.7081	0.0000	4,737.8288	4,737.8288	1.1970	0.0000	4,756.6016
Maximum	**12.0246**	**45.6268**	**23.5431**	**0.0481**	**8.2777**	**2.3914**	**10.6691**	**4.5080**	**2.2001**	**6.7081**	**0.0000**	**4,737.8288**	**4,737.8288**	**1.1970**	**0.0000**	**4,756.6016**

	ROG	**NOx**	**CO**	**SO2**	**Fugitive PM10**	**Exhaust PM10**	**PM10 Total**	**Fugitive PM2.5**	**Exhaust PM2.5**	**PM2.5 Total**	**Bio- CO2**	**NBio-CO2**	**Total CO2**	**CH4**	**N20**	**CO2e**
Percent Reduction	**0.00**	**0.00**	**0.00**	**0.00**	**54.55**	**0.00**	**48.22**	**54.78**	**0.00**	**44.88**	**0.00**	**0.00**	**0.00**	**0.00**	**0.00**	**0.00**

2.2 Overall Operational

Unmitigated Operational

	ROG	NOx	CO	SO2	Fugitive PM10	Exhaust PM10	PM10 Total	Fugitive PM2.5	Exhaust PM2.5	PM2.5 Total	Bio- CO2	NBio- CO2	Total CO2	CH4	N2O	CO2e
Category	lb/day										lb/day					
Area	1.6131	3.1000e-004	0.0340	0.0000		1.2000e-004	1.2000e-004		1.2000e-004	1.2000e-004		0.0724	0.0724	1.9000e-004		0.0773
Energy	5.6400e-003	0.0513	0.0431	3.1000e-004		3.9000e-003	3.9000e-003		3.9000e-003	3.9000e-003		61.5149	61.5149	1.1800e-003	1.1300e-003	61.8805
Mobile	4.1176	24.2475	37.6120	0.1272	8.2924	0.1072	8.3995	2.2192	0.1008	2.3200		12,978.3530	12,978.3530	0.7870		12,998.0272
Total	**5.7363**	**24.2991**	**37.6891**	**0.1275**	**8.2924**	**0.1112**	**8.4035**	**2.2192**	**0.1048**	**2.3240**		**13,039.9404**	**13,039.9404**	**0.7883**	**1.1300e-003**	**13,059.9849**

Mitigated Operational

	ROG	NOx	CO	SO2	Fugitive PM10	Exhaust PM10	PM10 Total	Fugitive PM2.5	Exhaust PM2.5	PM2.5 Total	Bio- CO2	NBio- CO2	Total CO2	CH4	N2O	CO2e
Category	lb/day										lb/day					

Area	1.6131	3.1000e-004	0.0340	0.0000		1.2000e-004	1.2000e-004		1.2000e-004	1.2000e-004		0.0724	0.0724	1.9000e-004		0.0773
Energy	5.6400e-003	0.0513	0.0431	3.1000e-004		3.9000e-003	3.9000e-003		3.9000e-003	3.9000e-003		61.5149	61.5149	1.1800e-003	1.1300e-003	61.8805
Mobile	4.1176	24.2475	37.6120	0.1272	8.2924	0.1072	8.3995	2.2192	0.1008	2.3200		12,978.3530	12,978.3530	0.7870		12,998.0272
Total	**5.7363**	**24.2991**	**37.6891**	**0.1275**	**8.2924**	**0.1112**	**8.4035**	**2.2192**	**0.1048**	**2.3240**		**13,039.9404**	**13,039.9404**	**0.7883**	**1.1300e-003**	**13,059.9849**

	ROG	NOx	CO	SO2	Fugitive PM10	Exhaust PM10	PM10 Total	Fugitive PM2.5	Exhaust PM2.5	PM2.5 Total	Bio- CO2	NBio-CO2	Total CO2	CH4	N20	CO2e
Percent Reduction	**0.00**	**0.00**	**0.00**	**0.00**	**0.00**	**0.00**	**0.00**	**0.00**	**0.00**	**0.00**	**0.00**	**0.00**	**0.00**	**0.00**	**0.00**	**0.00**

3.0 Construction Detail

Construction Phase

Phase Number	Phase Name	Phase Type	Start Date	End Date	Num Days Week	Num Days	Phase Description
1	Site Preparation	Site Preparation	1/1/2019	1/7/2019	5	5	
2	Grading	Grading	1/8/2019	1/17/2019	5	8	
3	Building Construction	Building Construction	1/18/2019	12/5/2019	5	230	
4	Paving	Paving	12/6/2019	12/31/2019	5	18	
5	Architectural Coating	Architectural Coating	5/1/2019	12/5/2019	5	157	

Acres of Grading (Site Preparation Phase): 0

Acres of Grading (Grading Phase): 4

Acres of Paving: 3.47

Residential Indoor: 0; Residential Outdoor: 0; Non-Residential Indoor: 82,500; Non-Residential Outdoor: 27,500; Striped Parking Area:

OffRoad Equipment

Phase Name	Offroad Equipment Type	Amount	Usage Hours	Horse Power	Load Factor
Architectural Coating	Air Compressors	1	6.00	78	0.48
Paving	Cement and Mortar Mixers	2	6.00	9	0.56
Building Construction	Cranes	1	7.00	231	0.29

Building Construction	Forklifts	3	8.00	89	0.20
Grading	Excavators	1	8.00	158	0.38
Paving	Pavers	1	8.00	130	0.42
Paving	Rollers	2	6.00	80	0.38
Grading	Rubber Tired Dozers	1	8.00	247	0.40
Building Construction	Tractors/Loaders/Backhoes	3	7.00	97	0.37
Building Construction	Generator Sets	1	8.00	84	0.74
Grading	Tractors/Loaders/Backhoes	3	8.00	97	0.37
Paving	Tractors/Loaders/Backhoes	1	8.00	97	0.37
Site Preparation	Tractors/Loaders/Backhoes	4	8.00	97	0.37
Grading	Graders	1	8.00	187	0.41
Paving	Paving Equipment	2	6.00	132	0.36
Site Preparation	Rubber Tired Dozers	3	8.00	247	0.40
Building Construction	Welders	1	8.00	46	0.45

Trips and VMT

Phase Name	Offroad Equipment Count	Worker Trip Number	Vendor Trip Number	Hauling Trip Number	Worker Trip Length	Vendor Trip Length	Hauling Trip Length	Worker Vehicle Class	Vendor Vehicle Class	Hauling Vehicle Class
Site Preparation	7	18.00	0.00	0.00	10.80	7.30	20.00	LD_Mix	HDT_Mix	HHDT
Grading	6	15.00	0.00	0.00	10.80	7.30	20.00	LD_Mix	HDT_Mix	HHDT
Building Construction	9	82.00	34.00	0.00	10.80	7.30	20.00	LD_Mix	HDT_Mix	HHDT
Paving	8	20.00	0.00	0.00	10.80	7.30	20.00	LD_Mix	HDT_Mix	HHDT
Architectural Coating	1	16.00	0.00	0.00	10.80	7.30	20.00	LD_Mix	HDT_Mix	HHDT

3.1 Mitigation Measures Construction

Water Exposed Area

Reduce Vehicle Speed on Unpaved Roads

3.2 Site Preparation - 2019

Unmitigated Construction On-Site

	ROG	NOx	CO	SO2	Fugitive PM10	Exhaust PM10	PM10 Total	Fugitive PM2.5	Exhaust PM2.5	PM2.5 Total	Bio- CO2	NBio- CO2	Total CO2	CH4	N2O	CO2e
Category	lb/day										lb/day					
Fugitive Dust					18.0663	0.0000	18.0663	9.9307	0.0000	9.9307			0.0000			0.0000
Off-Road	4.3350	45.5727	22.0630	0.0380		2.3904	2.3904		2.1991	2.1991		3,766.4529	3,766.4529	1.1917		3,796.2445
Total	**4.3350**	**45.5727**	**22.0630**	**0.0380**	**18.0663**	**2.3904**	**20.4566**	**9.9307**	**2.1991**	**12.1298**		**3,766.4529**	**3,766.4529**	**1.1917**		**3,796.2445**

Unmitigated Construction Off-Site

	ROG	NOx	CO	SO2	Fugitive PM10	Exhaust PM10	PM10 Total	Fugitive PM2.5	Exhaust PM2.5	PM2.5 Total	Bio- CO2	NBio- CO2	Total CO2	CH4	N2O	CO2e
Category	lb/day										lb/day					
Hauling	0.0000	0.0000	0.0000	0.0000	0.0000	0.0000	0.0000	0.0000	0.0000	0.0000		0.0000	0.0000	0.0000		0.0000
Vendor	0.0000	0.0000	0.0000	0.0000	0.0000	0.0000	0.0000	0.0000	0.0000	0.0000		0.0000	0.0000	0.0000		0.0000
Worker	0.0868	0.0541	0.6838	1.5600e-003	0.1479	1.0300e-003	0.1489	0.0392	9.5000e-004	0.0402		155.3854	155.3854	5.3100e-003		155.5181
Total	**0.0868**	**0.0541**	**0.6838**	**1.5600e-003**	**0.1479**	**1.0300e-003**	**0.1489**	**0.0392**	**9.5000e-004**	**0.0402**		**155.3854**	**155.3854**	**5.3100e-003**		**155.5181**

Mitigated Construction On-Site

	ROG	NOx	CO	SO2	Fugitive PM10	Exhaust PM10	PM10 Total	Fugitive PM2.5	Exhaust PM2.5	PM2.5 Total	Bio- CO2	NBio- CO2	Total CO2	CH4	N2O	CO2e
Category	lb/day										lb/day					

Fugitive Dust					8.1298	0.0000	8.1298	4.4688	0.0000	4.4688			0.0000			0.0000
Off-Road	4.3350	45.5727	22.0630	0.0380		2.3904	2.3904		2.1991	2.1991	0.0000	3,766.4529	3,766.4529	1.1917		3,796.2445
Total	**4.3350**	**45.5727**	**22.0630**	**0.0380**	**8.1298**	**2.3904**	**10.5202**	**4.4688**	**2.1991**	**6.6679**	**0.0000**	**3,766.4529**	**3,766.4529**	**1.1917**		**3,796.2445**

Mitigated Construction Off-Site

	ROG	NOx	CO	SO2	Fugitive PM10	Exhaust PM10	PM10 Total	Fugitive PM2.5	Exhaust PM2.5	PM2.5 Total	Bio- CO2	NBio- CO2	Total CO2	CH4	N2O	CO2e
Category	lb/day										lb/day					
Hauling	0.0000	0.0000	0.0000	0.0000	0.0000	0.0000	0.0000	0.0000	0.0000	0.0000		0.0000	0.0000	0.0000		0.0000
Vendor	0.0000	0.0000	0.0000	0.0000	0.0000	0.0000	0.0000	0.0000	0.0000	0.0000		0.0000	0.0000	0.0000		0.0000
Worker	0.0868	0.0541	0.6838	1.5600e-003	0.1479	1.0300e-003	0.1489	0.0392	9.5000e-004	0.0402		155.3854	155.3854	5.3100e-003		155.5181
Total	**0.0868**	**0.0541**	**0.6838**	**1.5600e-003**	**0.1479**	**1.0300e-003**	**0.1489**	**0.0392**	**9.5000e-004**	**0.0402**		**155.3854**	**155.3854**	**5.3100e-003**		**155.5181**

3.3 Grading - 2019

Unmitigated Construction On-Site

	ROG	NOx	CO	SO2	Fugitive PM10	Exhaust PM10	PM10 Total	Fugitive PM2.5	Exhaust PM2.5	PM2.5 Total	Bio- CO2	NBio- CO2	Total CO2	CH4	N2O	CO2e
Category	lb/day										lb/day					
Fugitive Dust					6.5523	0.0000	6.5523	3.3675	0.0000	3.3675			0.0000			0.0000
Off-Road	2.5805	28.3480	16.2934	0.0297		1.3974	1.3974		1.2856	1.2856		2,936.8068	2,936.8068	0.9292		2,960.0361
Total	**2.5805**	**28.3480**	**16.2934**	**0.0297**	**6.5523**	**1.3974**	**7.9497**	**3.3675**	**1.2856**	**4.6531**		**2,936.8068**	**2,936.8068**	**0.9292**		**2,960.0361**

Unmitigated Construction Off-Site

	ROG	NOx	CO	SO2	Fugitive PM10	Exhaust PM10	PM10 Total	Fugitive PM2.5	Exhaust PM2.5	PM2.5 Total	Bio- CO2	NBio- CO2	Total CO2	CH4	N2O	CO2e
Category	lb/day										lb/day					
Hauling	0.0000	0.0000	0.0000	0.0000	0.0000	0.0000	0.0000	0.0000	0.0000	0.0000		0.0000	0.0000	0.0000		0.0000
Vendor	0.0000	0.0000	0.0000	0.0000	0.0000	0.0000	0.0000	0.0000	0.0000	0.0000		0.0000	0.0000	0.0000		0.0000
Worker	0.0724	0.0451	0.5698	1.3000e-003	0.1232	8.6000e-004	0.1241	0.0327	7.9000e-004	0.0335		129.4878	129.4878	4.4200e-003		129.5984
Total	**0.0724**	**0.0451**	**0.5698**	**1.3000e-003**	**0.1232**	**8.6000e-004**	**0.1241**	**0.0327**	**7.9000e-004**	**0.0335**		**129.4878**	**129.4878**	**4.4200e-003**		**129.5984**

Mitigated Construction On-Site

	ROG	NOx	CO	SO2	Fugitive PM10	Exhaust PM10	PM10 Total	Fugitive PM2.5	Exhaust PM2.5	PM2.5 Total	Bio- CO2	NBio- CO2	Total CO2	CH4	N2O	CO2e
Category	lb/day										lb/day					
Fugitive Dust					2.9486	0.0000	2.9486	1.5154	0.0000	1.5154			0.0000			0.0000
Off-Road	2.5805	28.3480	16.2934	0.0297		1.3974	1.3974		1.2856	1.2856	0.0000	2,936.8068	2,936.8068	0.9292		2,960.0361
Total	**2.5805**	**28.3480**	**16.2934**	**0.0297**	**2.9486**	**1.3974**	**4.3459**	**1.5154**	**1.2856**	**2.8009**	**0.0000**	**2,936.8068**	**2,936.8068**	**0.9292**		**2,960.0361**

Mitigated Construction Off-Site

	ROG	NOx	CO	SO2	Fugitive PM10	Exhaust PM10	PM10 Total	Fugitive PM2.5	Exhaust PM2.5	PM2.5 Total	Bio- CO2	NBio- CO2	Total CO2	CH4	N2O	CO2e

Category	lb/day										lb/day					
Hauling	0.0000	0.0000	0.0000	0.0000	0.0000	0.0000	0.0000	0.0000	0.0000	0.0000		0.0000	0.0000	0.0000		0.0000
Vendor	0.0000	0.0000	0.0000	0.0000	0.0000	0.0000	0.0000	0.0000	0.0000	0.0000		0.0000	0.0000	0.0000		0.0000
Worker	0.0724	0.0451	0.5698	1.3000e-003	0.1232	8.6000e-004	0.1241	0.0327	7.9000e-004	0.0335		129.4878	129.4878	4.4200e-003		129.5984
Total	**0.0724**	**0.0451**	**0.5698**	**1.3000e-003**	**0.1232**	**8.6000e-004**	**0.1241**	**0.0327**	**7.9000e-004**	**0.0335**		**129.4878**	**129.4878**	**4.4200e-003**		**129.5984**

3.4 Building Construction - 2019

Unmitigated Construction On-Site

	ROG	NOx	CO	SO2	Fugitive PM10	Exhaust PM10	PM10 Total	Fugitive PM2.5	Exhaust PM2.5	PM2.5 Total	Bio- CO2	NBio- CO2	Total CO2	CH4	N2O	CO2e
Category	lb/day										lb/day					
Off-Road	2.3612	21.0788	17.1638	0.0269		1.2899	1.2899		1.2127	1.2127		2,591.5802	2,591.5802	0.6313		2,607.3635
Total	**2.3612**	**21.0788**	**17.1638**	**0.0269**		**1.2899**	**1.2899**		**1.2127**	**1.2127**		**2,591.5802**	**2,591.5802**	**0.6313**		**2,607.3635**

Unmitigated Construction Off-Site

	ROG	NOx	CO	SO2	Fugitive PM10	Exhaust PM10	PM10 Total	Fugitive PM2.5	Exhaust PM2.5	PM2.5 Total	Bio- CO2	NBio- CO2	Total CO2	CH4	N2O	CO2e
Category	lb/day										lb/day					
Hauling	0.0000	0.0000	0.0000	0.0000	0.0000	0.0000	0.0000	0.0000	0.0000	0.0000		0.0000	0.0000	0.0000		0.0000
Vendor	0.1255	3.9985	0.8152	9.6700e-003	0.2303	0.0258	0.2562	0.0663	0.0247	0.0910		1,018.8136	1,018.8136	0.0669		1,020.4862
Worker	0.3956	0.2465	3.1150	7.1200e-003	0.6736	4.6800e-003	0.6783	0.1787	4.3100e-003	0.1830		707.8667	707.8667	0.0242		708.4712

Total	**0.5211**	**4.2450**	**3.9302**	**0.0168**	**0.9040**	**0.0305**	**0.9345**	**0.2450**	**0.0290**	**0.2740**		**1,726.6803**	**1,726.6803**	**0.0911**		**1,728.9574**

Mitigated Construction On-Site

	ROG	NOx	CO	SO2	Fugitive PM10	Exhaust PM10	PM10 Total	Fugitive PM2.5	Exhaust PM2.5	PM2.5 Total	Bio- CO2	NBio- CO2	Total CO2	CH4	N2O	CO2e
Category	lb/day										lb/day					
Off-Road	2.3612	21.0788	17.1638	0.0269		1.2899	1.2899		1.2127	1.2127	0.0000	2,591.5802	2,591.5802	0.6313		2,607.3635
Total	**2.3612**	**21.0788**	**17.1638**	**0.0269**		**1.2899**	**1.2899**		**1.2127**	**1.2127**	**0.0000**	**2,591.5802**	**2,591.5802**	**0.6313**		**2,607.3635**

Mitigated Construction Off-Site

	ROG	NOx	CO	SO2	Fugitive PM10	Exhaust PM10	PM10 Total	Fugitive PM2.5	Exhaust PM2.5	PM2.5 Total	Bio- CO2	NBio- CO2	Total CO2	CH4	N2O	CO2e
Category	lb/day										lb/day					
Hauling	0.0000	0.0000	0.0000	0.0000	0.0000	0.0000	0.0000	0.0000	0.0000	0.0000		0.0000	0.0000	0.0000		0.0000
Vendor	0.1255	3.9985	0.8152	9.6700e-003	0.2303	0.0258	0.2562	0.0663	0.0247	0.0910		1,018.8136	1,018.8136	0.0669		1,020.4862
Worker	0.3956	0.2465	3.1150	7.1200e-003	0.6736	4.6800e-003	0.6783	0.1787	4.3100e-003	0.1830		707.8667	707.8667	0.0242		708.4712
Total	**0.5211**	**4.2450**	**3.9302**	**0.0168**	**0.9040**	**0.0305**	**0.9345**	**0.2450**	**0.0290**	**0.2740**		**1,726.6803**	**1,726.6803**	**0.0911**		**1,728.9574**

3.5 Paving - 2019

Unmitigated Construction On-Site

	ROG	NOx	CO	SO2	Fugitive PM10	Exhaust PM10	PM10 Total	Fugitive PM2.5	Exhaust PM2.5	PM2.5 Total	Bio- CO2	NBio- CO2	Total CO2	CH4	N2O	CO2e
Category	lb/day										lb/day					
Off-Road	1.2679	12.7604	12.3130	0.0189		0.7196	0.7196		0.6637	0.6637		1,843.3191	1,843.3191	0.5671		1,857.4966
Paving	0.3595					0.0000	0.0000		0.0000	0.0000			0.0000			0.0000
Total	**1.6274**	**12.7604**	**12.3130**	**0.0189**		**0.7196**	**0.7196**		**0.6637**	**0.6637**		**1,843.3191**	**1,843.3191**	**0.5671**		**1,857.4966**

Unmitigated Construction Off-Site

	ROG	NOx	CO	SO2	Fugitive PM10	Exhaust PM10	PM10 Total	Fugitive PM2.5	Exhaust PM2.5	PM2.5 Total	Bio- CO2	NBio- CO2	Total CO2	CH4	N2O	CO2e
Category	lb/day										lb/day					
Hauling	0.0000	0.0000	0.0000	0.0000	0.0000	0.0000	0.0000	0.0000	0.0000	0.0000		0.0000	0.0000	0.0000		0.0000
Vendor	0.0000	0.0000	0.0000	0.0000	0.0000	0.0000	0.0000	0.0000	0.0000	0.0000		0.0000	0.0000	0.0000		0.0000
Worker	0.0965	0.0601	0.7598	1.7400e-003	0.1643	1.1400e-003	0.1654	0.0436	1.0500e-003	0.0446		172.6504	172.6504	5.9000e-003		172.7979
Total	**0.0965**	**0.0601**	**0.7598**	**1.7400e-003**	**0.1643**	**1.1400e-003**	**0.1654**	**0.0436**	**1.0500e-003**	**0.0446**		**172.6504**	**172.6504**	**5.9000e-003**		**172.7979**

Mitigated Construction On-Site

	ROG	NOx	CO	SO2	Fugitive PM10	Exhaust PM10	PM10 Total	Fugitive PM2.5	Exhaust PM2.5	PM2.5 Total	Bio- CO2	NBio- CO2	Total CO2	CH4	N2O	CO2e
Category	lb/day										lb/day					

Off-Road	1.2679	12.7604	12.3130	0.0189		0.7196	0.7196		0.6637	0.6637	0.0000	1,843.3191	1,843.3191	0.5671		1,857.4966
Paving	0.3595					0.0000	0.0000		0.0000	0.0000			0.0000			0.0000
Total	**1.6274**	**12.7604**	**12.3130**	**0.0189**		**0.7196**	**0.7196**		**0.6637**	**0.6637**	**0.0000**	**1,843.3191**	**1,843.3191**	**0.5671**		**1,857.4966**

Mitigated Construction Off-Site

	ROG	NOx	CO	SO2	Fugitive PM10	Exhaust PM10	PM10 Total	Fugitive PM2.5	Exhaust PM2.5	PM2.5 Total	Bio- CO2	NBio- CO2	Total CO2	CH4	N2O	CO2e
Category	lb/day										lb/day					
Hauling	0.0000	0.0000	0.0000	0.0000	0.0000	0.0000	0.0000	0.0000	0.0000	0.0000		0.0000	0.0000	0.0000		0.0000
Vendor	0.0000	0.0000	0.0000	0.0000	0.0000	0.0000	0.0000	0.0000	0.0000	0.0000		0.0000	0.0000	0.0000		0.0000
Worker	0.0965	0.0601	0.7598	1.7400e-003	0.1643	1.1400e-003	0.1654	0.0436	1.0500e-003	0.0446		172.6504	172.6504	5.9000e-003		172.7979
Total	**0.0965**	**0.0601**	**0.7598**	**1.7400e-003**	**0.1643**	**1.1400e-003**	**0.1654**	**0.0436**	**1.0500e-003**	**0.0446**		**172.6504**	**172.6504**	**5.9000e-003**		**172.7979**

3.6 Architectural Coating - 2019

Unmitigated Construction On-Site

	ROG	NOx	CO	SO2	Fugitive PM10	Exhaust PM10	PM10 Total	Fugitive PM2.5	Exhaust PM2.5	PM2.5 Total	Bio- CO2	NBio- CO2	Total CO2	CH4	N2O	CO2e
Category	lb/day										lb/day					
Archit. Coating	8.7987					0.0000	0.0000		0.0000	0.0000			0.0000			0.0000
Off-Road	0.2664	1.8354	1.8413	2.9700e-003		0.1288	0.1288		0.1288	0.1288		281.4481	281.4481	0.0238		282.0423
Total	**9.0651**	**1.8354**	**1.8413**	**2.9700e-003**		**0.1288**	**0.1288**		**0.1288**	**0.1288**		**281.4481**	**281.4481**	**0.0238**		**282.0423**

Unmitigated Construction Off-Site

	ROG	NOx	CO	SO2	Fugitive PM10	Exhaust PM10	PM10 Total	Fugitive PM2.5	Exhaust PM2.5	PM2.5 Total	Bio- CO2	NBio- CO2	Total CO2	CH4	N2O	CO2e
Category	lb/day										lb/day					
Hauling	0.0000	0.0000	0.0000	0.0000	0.0000	0.0000	0.0000	0.0000	0.0000	0.0000		0.0000	0.0000	0.0000		0.0000
Vendor	0.0000	0.0000	0.0000	0.0000	0.0000	0.0000	0.0000	0.0000	0.0000	0.0000		0.0000	0.0000	0.0000		0.0000
Worker	0.0772	0.0481	0.6078	1.3900e-003	0.1314	9.1000e-004	0.1324	0.0349	8.4000e-004	0.0357		138.1203	138.1203	4.7200e-003		138.2383
Total	**0.0772**	**0.0481**	**0.6078**	**1.3900e-003**	**0.1314**	**9.1000e-004**	**0.1324**	**0.0349**	**8.4000e-004**	**0.0357**		**138.1203**	**138.1203**	**4.7200e-003**		**138.2383**

Mitigated Construction On-Site

	ROG	NOx	CO	SO2	Fugitive PM10	Exhaust PM10	PM10 Total	Fugitive PM2.5	Exhaust PM2.5	PM2.5 Total	Bio- CO2	NBio- CO2	Total CO2	CH4	N2O	CO2e
Category	lb/day										lb/day					
Archit. Coating	8.7987					0.0000	0.0000		0.0000	0.0000			0.0000			0.0000
Off-Road	0.2664	1.8354	1.8413	2.9700e-003		0.1288	0.1288		0.1288	0.1288	0.0000	281.4481	281.4481	0.0238		282.0423
Total	**9.0651**	**1.8354**	**1.8413**	**2.9700e-003**		**0.1288**	**0.1288**		**0.1288**	**0.1288**	**0.0000**	**281.4481**	**281.4481**	**0.0238**		**282.0423**

Mitigated Construction Off-Site

	ROG	NOx	CO	SO2	Fugitive PM10	Exhaust PM10	PM10 Total	Fugitive PM2.5	Exhaust PM2.5	PM2.5 Total	Bio- CO2	NBio- CO2	Total CO2	CH4	N2O	CO2e

Category	lb/day										lb/day					
Hauling	0.0000	0.0000	0.0000	0.0000	0.0000	0.0000	0.0000	0.0000	0.0000	0.0000		0.0000	0.0000	0.0000		0.0000
Vendor	0.0000	0.0000	0.0000	0.0000	0.0000	0.0000	0.0000	0.0000	0.0000	0.0000		0.0000	0.0000	0.0000		0.0000
Worker	0.0772	0.0481	0.6078	1.3900e-003	0.1314	9.1000e-004	0.1324	0.0349	8.4000e-004	0.0357		138.1203	138.1203	4.7200e-003		138.2383
Total	**0.0772**	**0.0481**	**0.6078**	**1.3900e-003**	**0.1314**	**9.1000e-004**	**0.1324**	**0.0349**	**8.4000e-004**	**0.0357**		**138.1203**	**138.1203**	**4.7200e-003**		**138.2383**

4.0 Operational Detail - Mobile

4.1 Mitigation Measures Mobile

	ROG	NOx	CO	SO2	Fugitive PM10	Exhaust PM10	PM10 Total	Fugitive PM2.5	Exhaust PM2.5	PM2.5 Total	Bio- CO2	NBio- CO2	Total CO2	CH4	N2O	CO2e
Category	lb/day										lb/day					
Mitigated	4.1176	24.2475	37.6120	0.1272	8.2924	0.1072	8.3995	2.2192	0.1008	2.3200		12,978.3530	12,978.3530	0.7870		12,998.0272
Unmitigated	4.1176	24.2475	37.6120	0.1272	8.2924	0.1072	8.3995	2.2192	0.1008	2.3200		12,978.3530	12,978.3530	0.7870		12,998.0272

4.2 Trip Summary Information

	Average Daily Trip Rate			Unmitigated	Mitigated
Land Use	Weekday	Saturday	Sunday	Annual VMT	Annual VMT
Medical Office Building	1,987.15	492.80	85.25	2,939,733	2,939,733
Other Non-Asphalt Surfaces	0.00	0.00	0.00		
Parking Lot	0.00	0.00	0.00		
Total	1,987.15	492.80	85.25	2,939,733	2,939,733

4.3 Trip Type Information

	Miles			Trip %			Trip Purpose %		
Land Use	H-W or C-W	H-S or C-C	H-O or C-NW	H-W or C-W	H-S or C-C	H-O or C-NW	Primary	Diverted	Pass-by
Medical Office Building	9.50	7.30	7.30	29.60	51.40	19.00	60	30	10
Other Non-Asphalt Surfaces	9.50	7.30	7.30	0.00	0.00	0.00	0	0	0
Parking Lot	9.50	7.30	7.30	0.00	0.00	0.00	0	0	0

4.4 Fleet Mix

Land Use	LDA	LDT1	LDT2	MDV	LHD1	LHD2	MHD	HHD	OBUS	UBUS	MCY	SBUS	MH
Medical Office Building	0.546179	0.037976	0.179086	0.122965	0.018430	0.005460	0.017497	0.061396	0.001337	0.001657	0.006117	0.000817	0.001082
Other Non-Asphalt Surfaces	0.546179	0.037976	0.179086	0.122965	0.018430	0.005460	0.017497	0.061396	0.001337	0.001657	0.006117	0.000817	0.001082
Parking Lot	0.546179	0.037976	0.179086	0.122965	0.018430	0.005460	0.017497	0.061396	0.001337	0.001657	0.006117	0.000817	0.001082

5.0 Energy Detail

Historical Energy Use: N

5.1 Mitigation Measures Energy

	ROG	NOx	CO	SO2	Fugitive PM10	Exhaust PM10	PM10 Total	Fugitive PM2.5	Exhaust PM2.5	PM2.5 Total	Bio- CO2	NBio- CO2	Total CO2	CH4	N2O	CO2e
Category	lb/day										lb/day					
NaturalGas Mitigated	5.6400e-003	0.0513	0.0431	3.1000e-004		3.9000e-003	3.9000e-003		3.9000e-003	3.9000e-003		61.5149	61.5149	1.1800e-003	1.1300e-003	61.8805
NaturalGas Unmitigated	5.6400e-003	0.0513	0.0431	3.1000e-004		3.9000e-003	3.9000e-003		3.9000e-003	3.9000e-003		61.5149	61.5149	1.1800e-003	1.1300e-003	61.8805

5.2 Energy by Land Use - NaturalGas

Unmitigated

	NaturalGas Use	ROG	NOx	CO	SO2	Fugitive PM10	Exhaust PM10	PM10 Total	Fugitive PM2.5	Exhaust PM2.5	PM2.5 Total	Bio- CO2	NBio- CO2	Total CO2	CH4	N2O	CO2e
Land Use	kBTU/yr	lb/day										lb/day					
Medical Office Building	522.877	5.6400e-003	0.0513	0.0431	3.1000e-004		3.9000e-003	3.9000e-003		3.9000e-003	3.9000e-003		61.5149	61.5149	1.1800e-003	1.1300e-003	61.8805
Other Non-Asphalt Surfaces	0	0.0000	0.0000	0.0000	0.0000		0.0000	0.0000		0.0000	0.0000		0.0000	0.0000	0.0000	0.0000	0.0000
Parking Lot	0	0.0000	0.0000	0.0000	0.0000		0.0000	0.0000		0.0000	0.0000		0.0000	0.0000	0.0000	0.0000	0.0000
Total		**5.6400e-003**	**0.0513**	**0.0431**	**3.1000e-004**		**3.9000e-003**	**3.9000e-003**		**3.9000e-003**	**3.9000e-003**		**61.5149**	**61.5149**	**1.1800e-003**	**1.1300e-003**	**61.8805**

Mitigated

	NaturalGas Use	ROG	NOx	CO	SO2	Fugitive PM10	Exhaust PM10	PM10 Total	Fugitive PM2.5	Exhaust PM2.5	PM2.5 Total	Bio- CO2	NBio- CO2	Total CO2	CH4	N2O	CO2e
Land Use	kBTU/yr	lb/day										lb/day					
Medical Office Building	0.522877	5.6400e-003	0.0513	0.0431	3.1000e-004		3.9000e-003	3.9000e-003		3.9000e-003	3.9000e-003		61.5149	61.5149	1.1800e-003	1.1300e-003	61.8805
Other Non-Asphalt Surfaces	0	0.0000	0.0000	0.0000	0.0000		0.0000	0.0000		0.0000	0.0000		0.0000	0.0000	0.0000	0.0000	0.0000
Parking Lot	0	0.0000	0.0000	0.0000	0.0000		0.0000	0.0000		0.0000	0.0000		0.0000	0.0000	0.0000	0.0000	0.0000
Total		**5.6400e-003**	**0.0513**	**0.0431**	**3.1000e-004**		**3.9000e-003**	**3.9000e-003**		**3.9000e-003**	**3.9000e-003**		**61.5149**	**61.5149**	**1.1800e-003**	**1.1300e-003**	**61.8805**

6.0 Area Detail

6.1 Mitigation Measures Area

	ROG	NOx	CO	SO2	Fugitive PM10	Exhaust PM10	PM10 Total	Fugitive PM2.5	Exhaust PM2.5	PM2.5 Total	Bio- CO2	NBio- CO2	Total CO2	CH4	N2O	CO2e
Category	lb/day										lb/day					
Mitigated	1.6131	3.1000e-004	0.0340	0.0000		1.2000e-004	1.2000e-004		1.2000e-004	1.2000e-004		0.0724	0.0724	1.9000e-004		0.0773
Unmitigated	1.6131	3.1000e-004	0.0340	0.0000		1.2000e-004	1.2000e-004		1.2000e-004	1.2000e-004		0.0724	0.0724	1.9000e-004		0.0773

6.2 Area by SubCategory

Unmitigated

	ROG	NOx	CO	SO2	Fugitive PM10	Exhaust PM10	PM10 Total	Fugitive PM2.5	Exhaust PM2.5	PM2.5 Total	Bio- CO2	NBio- CO2	Total CO2	CH4	N2O	CO2e
SubCategory	lb/day										lb/day					
Architectural Coating	0.3785					0.0000	0.0000		0.0000	0.0000			0.0000			0.0000
Consumer Products	1.2314					0.0000	0.0000		0.0000	0.0000			0.0000			0.0000
Landscaping	3.2000e-003	3.1000e-004	0.0340	0.0000		1.2000e-004	1.2000e-004		1.2000e-004	1.2000e-004		0.0724	0.0724	1.9000e-004		0.0773
Total	**1.6131**	**3.1000e-004**	**0.0340**	**0.0000**		**1.2000e-004**	**1.2000e-004**		**1.2000e-004**	**1.2000e-004**		**0.0724**	**0.0724**	**1.9000e-004**		**0.0773**

Mitigated

	ROG	NOx	CO	SO2	Fugitive PM10	Exhaust PM10	PM10 Total	Fugitive PM2.5	Exhaust PM2.5	PM2.5 Total	Bio- CO2	NBio- CO2	Total CO2	CH4	N2O	CO2e

SubCategory	lb/day										lb/day					
Architectural Coating	0.3785					0.0000	0.0000		0.0000	0.0000			0.0000			0.0000
Consumer Products	1.2314					0.0000	0.0000		0.0000	0.0000			0.0000			0.0000
Landscaping	3.2000e-003	3.1000e-004	0.0340	0.0000		1.2000e-004	1.2000e-004		1.2000e-004	1.2000e-004		0.0724	0.0724	1.9000e-004		0.0773
Total	**1.6131**	**3.1000e-004**	**0.0340**	**0.0000**		**1.2000e-004**	**1.2000e-004**		**1.2000e-004**	**1.2000e-004**		**0.0724**	**0.0724**	**1.9000e-004**		**0.0773**

7.0 Water Detail

7.1 Mitigation Measures Water

8.0 Waste Detail

8.1 Mitigation Measures Waste

9.0 Operational Offroad

Equipment Type	Number	Hours/Day	Days/Year	Horse Power	Load Factor	Fuel Type

10.0 Stationary Equipment

Fire Pumps and Emergency Generators

Equipment Type	Number	Hours/Day	Hours/Year	Horse Power	Load Factor	Fuel Type

Boilers

Equipment Type	Number	Heat Input/Day	Heat Input/Year	Boiler Rating	Fuel Type

User Defined Equipment

Equipment Type	Number

11.0 Vegetation

Kaiser Permanente Hesperia - Medical Office Building

San Bernardino-Mojave Desert County, Winter

1.0 Project Characteristics

1.1 Land Usage

Land Uses	Size	Metric	Lot Acreage	Floor Surface Area	Population
Medical Office Building	55.00	1000sqft	1.26	55,000.00	0
Parking Lot	275.00	Space	2.47	110,000.00	0
Other Non-Asphalt Surfaces	1.00	Acre	1.00	43,560.00	0

1.2 Other Project Characteristics

Urbanization	Urban	**Wind Speed (m/s)**	2.6	**Precipitation Freq (Days)**	32
Climate Zone	10			**Operational Year**	2020
Utility Company	Southern California Edison				
CO2 Intensity (lb/MWhr)	702.44	**CH4 Intensity (lb/MWhr)**	0.029	**N2O Intensity (lb/MWhr)**	0.006

1.3 User Entered Comments & Non-Default Data

Project Characteristics -

Land Use -

Construction Phase - Default schedule, except assume that architectural coatings applied as part of the building construction process.

Construction Off-road Equipment Mitigation -

Table Name	Column Name	Default Value	New Value
tblConstDustMitigation	WaterUnpavedRoadVehicleSpeed	0	15
tblConstructionPhase	NumDays	18.00	157.00

tblConstructionPhase	PhaseEndDate	2/21/2020	12/5/2019
tblConstructionPhase	PhaseEndDate	1/2/2020	12/5/2019
tblConstructionPhase	PhaseEndDate	2/14/2019	1/17/2019
tblConstructionPhase	PhaseEndDate	1/28/2020	12/31/2019
tblConstructionPhase	PhaseEndDate	2/4/2019	1/7/2019
tblConstructionPhase	PhaseStartDate	1/29/2020	5/1/2019
tblConstructionPhase	PhaseStartDate	2/15/2019	1/18/2019
tblConstructionPhase	PhaseStartDate	2/5/2019	1/8/2019
tblConstructionPhase	PhaseStartDate	1/3/2020	12/6/2019
tblConstructionPhase	PhaseStartDate	1/29/2019	1/1/2019

2.0 Emissions Summary

2.1 Overall Construction (Maximum Daily Emission)

Unmitigated Construction

	ROG	NOx	CO	SO2	Fugitive PM10	Exhaust PM10	PM10 Total	Fugitive PM2.5	Exhaust PM2.5	PM2.5 Total	Bio- CO2	NBio- CO2	Total CO2	CH4	N2O	CO2e
Year	lb/day										lb/day					
2019	12.0195	45.6297	23.0509	0.0468	18.2141	2.3914	20.6055	9.9699	2.2001	12.1700	0.0000	4,613.4570	4,613.4570	1.1964	0.0000	4,632.3173
Maximum	**12.0195**	**45.6297**	**23.0509**	**0.0468**	**18.2141**	**2.3914**	**20.6055**	**9.9699**	**2.2001**	**12.1700**	**0.0000**	**4,613.4570**	**4,613.4570**	**1.1964**	**0.0000**	**4,632.3173**

Mitigated Construction

	ROG	NOx	CO	SO2	Fugitive PM10	Exhaust PM10	PM10 Total	Fugitive PM2.5	Exhaust PM2.5	PM2.5 Total	Bio- CO2	NBio- CO2	Total CO2	CH4	N2O	CO2e

Year	lb/day										lb/day					
2019	12.0195	45.6297	23.0509	0.0468	8.2777	2.3914	10.6691	4.5080	2.2001	6.7081	0.0000	4,613.4570	4,613.4570	1.1964	0.0000	4,632.3173
Maximum	**12.0195**	**45.6297**	**23.0509**	**0.0468**	**8.2777**	**2.3914**	**10.6691**	**4.5080**	**2.2001**	**6.7081**	**0.0000**	**4,613.4570**	**4,613.4570**	**1.1964**	**0.0000**	**4,632.3173**

	ROG	**NOx**	**CO**	**SO2**	**Fugitive PM10**	**Exhaust PM10**	**PM10 Total**	**Fugitive PM2.5**	**Exhaust PM2.5**	**PM2.5 Total**	**Bio- CO2**	**NBio-CO2**	**Total CO2**	**CH4**	**N20**	**CO2e**
Percent Reduction	**0.00**	**0.00**	**0.00**	**0.00**	**54.55**	**0.00**	**48.22**	**54.78**	**0.00**	**44.88**	**0.00**	**0.00**	**0.00**	**0.00**	**0.00**	**0.00**

2.2 Overall Operational

Unmitigated Operational

	ROG	NOx	CO	SO2	Fugitive PM10	Exhaust PM10	PM10 Total	Fugitive PM2.5	Exhaust PM2.5	PM2.5 Total	Bio- CO2	NBio- CO2	Total CO2	CH4	N2O	CO2e
Category	lb/day										lb/day					
Area	1.6131	3.1000e-004	0.0340	0.0000		1.2000e-004	1.2000e-004		1.2000e-004	1.2000e-004		0.0724	0.0724	1.9000e-004		0.0773
Energy	5.6400e-003	0.0513	0.0431	3.1000e-004		3.9000e-003	3.9000e-003		3.9000e-003	3.9000e-003		61.5149	61.5149	1.1800e-003	1.1300e-003	61.8805
Mobile	3.5574	24.1053	34.3074	0.1168	8.2924	0.1085	8.4008	2.2192	0.1021	2.3212		11,928.7951	11,928.7951	0.8156		11,949.1844
Total	**5.1761**	**24.1569**	**34.3845**	**0.1171**	**8.2924**	**0.1125**	**8.4049**	**2.2192**	**0.1061**	**2.3253**		**11,990.3824**	**11,990.3824**	**0.8169**	**1.1300e-003**	**12,011.1421**

Mitigated Operational

	ROG	NOx	CO	SO2	Fugitive PM10	Exhaust PM10	PM10 Total	Fugitive PM2.5	Exhaust PM2.5	PM2.5 Total	Bio- CO2	NBio- CO2	Total CO2	CH4	N2O	CO2e
Category	lb/day										lb/day					

Area	1.6131	3.1000e-004	0.0340	0.0000		1.2000e-004	1.2000e-004		1.2000e-004	1.2000e-004		0.0724	0.0724	1.9000e-004		0.0773
Energy	5.6400e-003	0.0513	0.0431	3.1000e-004		3.9000e-003	3.9000e-003		3.9000e-003	3.9000e-003		61.5149	61.5149	1.1800e-003	1.1300e-003	61.8805
Mobile	3.5574	24.1053	34.3074	0.1168	8.2924	0.1085	8.4008	2.2192	0.1021	2.3212		11,928.7951	11,928.7951	0.8156		11,949.1844
Total	**5.1761**	**24.1569**	**34.3845**	**0.1171**	**8.2924**	**0.1125**	**8.4049**	**2.2192**	**0.1061**	**2.3253**		**11,990.3824**	**11,990.3824**	**0.8169**	**1.1300e-003**	**12,011.1421**

	ROG	NOx	CO	SO2	Fugitive PM10	Exhaust PM10	PM10 Total	Fugitive PM2.5	Exhaust PM2.5	PM2.5 Total	Bio- CO2	NBio-CO2	Total CO2	CH4	N20	CO2e
Percent Reduction	**0.00**	**0.00**	**0.00**	**0.00**	**0.00**	**0.00**	**0.00**	**0.00**	**0.00**	**0.00**	**0.00**	**0.00**	**0.00**	**0.00**	**0.00**	**0.00**

3.0 Construction Detail

Construction Phase

Phase Number	Phase Name	Phase Type	Start Date	End Date	Num Days Week	Num Days	Phase Description
1	Site Preparation	Site Preparation	1/1/2019	1/7/2019	5	5	
2	Grading	Grading	1/8/2019	1/17/2019	5	8	
3	Building Construction	Building Construction	1/18/2019	12/5/2019	5	230	
4	Paving	Paving	12/6/2019	12/31/2019	5	18	
5	Architectural Coating	Architectural Coating	5/1/2019	12/5/2019	5	157	

Acres of Grading (Site Preparation Phase): 0

Acres of Grading (Grading Phase): 4

Acres of Paving: 3.47

Residential Indoor: 0; Residential Outdoor: 0; Non-Residential Indoor: 82,500; Non-Residential Outdoor: 27,500; Striped Parking Area:

OffRoad Equipment

Phase Name	Offroad Equipment Type	Amount	Usage Hours	Horse Power	Load Factor
Architectural Coating	Air Compressors	1	6.00	78	0.48
Paving	Cement and Mortar Mixers	2	6.00	9	0.56
Building Construction	Cranes	1	7.00	231	0.29

Building Construction	Forklifts	3	8.00	89	0.20
Grading	Excavators	1	8.00	158	0.38
Paving	Pavers	1	8.00	130	0.42
Paving	Rollers	2	6.00	80	0.38
Grading	Rubber Tired Dozers	1	8.00	247	0.40
Building Construction	Tractors/Loaders/Backhoes	3	7.00	97	0.37
Building Construction	Generator Sets	1	8.00	84	0.74
Grading	Tractors/Loaders/Backhoes	3	8.00	97	0.37
Paving	Tractors/Loaders/Backhoes	1	8.00	97	0.37
Site Preparation	Tractors/Loaders/Backhoes	4	8.00	97	0.37
Grading	Graders	1	8.00	187	0.41
Paving	Paving Equipment	2	6.00	132	0.36
Site Preparation	Rubber Tired Dozers	3	8.00	247	0.40
Building Construction	Welders	1	8.00	46	0.45

Trips and VMT

Phase Name	Offroad Equipment Count	Worker Trip Number	Vendor Trip Number	Hauling Trip Number	Worker Trip Length	Vendor Trip Length	Hauling Trip Length	Worker Vehicle Class	Vendor Vehicle Class	Hauling Vehicle Class
Site Preparation	7	18.00	0.00	0.00	10.80	7.30	20.00	LD_Mix	HDT_Mix	HHDT
Grading	6	15.00	0.00	0.00	10.80	7.30	20.00	LD_Mix	HDT_Mix	HHDT
Building Construction	9	82.00	34.00	0.00	10.80	7.30	20.00	LD_Mix	HDT_Mix	HHDT
Paving	8	20.00	0.00	0.00	10.80	7.30	20.00	LD_Mix	HDT_Mix	HHDT
Architectural Coating	1	16.00	0.00	0.00	10.80	7.30	20.00	LD_Mix	HDT_Mix	HHDT

3.1 Mitigation Measures Construction

Water Exposed Area

Reduce Vehicle Speed on Unpaved Roads

3.2 Site Preparation - 2019

Unmitigated Construction On-Site

	ROG	NOx	CO	SO2	Fugitive PM10	Exhaust PM10	PM10 Total	Fugitive PM2.5	Exhaust PM2.5	PM2.5 Total	Bio- CO2	NBio- CO2	Total CO2	CH4	N2O	CO2e
Category	lb/day										lb/day					
Fugitive Dust					18.0663	0.0000	18.0663	9.9307	0.0000	9.9307			0.0000			0.0000
Off-Road	4.3350	45.5727	22.0630	0.0380		2.3904	2.3904		2.1991	2.1991		3,766.4529	3,766.4529	1.1917		3,796.2445
Total	**4.3350**	**45.5727**	**22.0630**	**0.0380**	**18.0663**	**2.3904**	**20.4566**	**9.9307**	**2.1991**	**12.1298**		**3,766.4529**	**3,766.4529**	**1.1917**		**3,796.2445**

Unmitigated Construction Off-Site

	ROG	NOx	CO	SO2	Fugitive PM10	Exhaust PM10	PM10 Total	Fugitive PM2.5	Exhaust PM2.5	PM2.5 Total	Bio- CO2	NBio- CO2	Total CO2	CH4	N2O	CO2e
Category	lb/day										lb/day					
Hauling	0.0000	0.0000	0.0000	0.0000	0.0000	0.0000	0.0000	0.0000	0.0000	0.0000		0.0000	0.0000	0.0000		0.0000
Vendor	0.0000	0.0000	0.0000	0.0000	0.0000	0.0000	0.0000	0.0000	0.0000	0.0000		0.0000	0.0000	0.0000		0.0000
Worker	0.0848	0.0570	0.5715	1.4000e-003	0.1479	1.0300e-003	0.1489	0.0392	9.5000e-004	0.0402		139.4726	139.4726	4.7000e-003		139.5900
Total	**0.0848**	**0.0570**	**0.5715**	**1.4000e-003**	**0.1479**	**1.0300e-003**	**0.1489**	**0.0392**	**9.5000e-004**	**0.0402**		**139.4726**	**139.4726**	**4.7000e-003**		**139.5900**

Mitigated Construction On-Site

	ROG	NOx	CO	SO2	Fugitive PM10	Exhaust PM10	PM10 Total	Fugitive PM2.5	Exhaust PM2.5	PM2.5 Total	Bio- CO2	NBio- CO2	Total CO2	CH4	N2O	CO2e
Category	lb/day										lb/day					

Fugitive Dust					8.1298	0.0000	8.1298	4.4688	0.0000	4.4688			0.0000			0.0000
Off-Road	4.3350	45.5727	22.0630	0.0380		2.3904	2.3904		2.1991	2.1991	0.0000	3,766.4529	3,766.4529	1.1917		3,796.2445
Total	**4.3350**	**45.5727**	**22.0630**	**0.0380**	**8.1298**	**2.3904**	**10.5202**	**4.4688**	**2.1991**	**6.6679**	**0.0000**	**3,766.4529**	**3,766.4529**	**1.1917**		**3,796.2445**

Mitigated Construction Off-Site

	ROG	NOx	CO	SO2	Fugitive PM10	Exhaust PM10	PM10 Total	Fugitive PM2.5	Exhaust PM2.5	PM2.5 Total	Bio- CO2	NBio- CO2	Total CO2	CH4	N2O	CO2e
Category	lb/day										lb/day					
Hauling	0.0000	0.0000	0.0000	0.0000	0.0000	0.0000	0.0000	0.0000	0.0000	0.0000		0.0000	0.0000	0.0000		0.0000
Vendor	0.0000	0.0000	0.0000	0.0000	0.0000	0.0000	0.0000	0.0000	0.0000	0.0000		0.0000	0.0000	0.0000		0.0000
Worker	0.0848	0.0570	0.5715	1.4000e-003	0.1479	1.0300e-003	0.1489	0.0392	9.5000e-004	0.0402		139.4726	139.4726	4.7000e-003		139.5900
Total	**0.0848**	**0.0570**	**0.5715**	**1.4000e-003**	**0.1479**	**1.0300e-003**	**0.1489**	**0.0392**	**9.5000e-004**	**0.0402**		**139.4726**	**139.4726**	**4.7000e-003**		**139.5900**

3.3 Grading - 2019

Unmitigated Construction On-Site

	ROG	NOx	CO	SO2	Fugitive PM10	Exhaust PM10	PM10 Total	Fugitive PM2.5	Exhaust PM2.5	PM2.5 Total	Bio- CO2	NBio- CO2	Total CO2	CH4	N2O	CO2e
Category	lb/day										lb/day					
Fugitive Dust					6.5523	0.0000	6.5523	3.3675	0.0000	3.3675			0.0000			0.0000
Off-Road	2.5805	28.3480	16.2934	0.0297		1.3974	1.3974		1.2856	1.2856		2,936.8068	2,936.8068	0.9292		2,960.0361
Total	**2.5805**	**28.3480**	**16.2934**	**0.0297**	**6.5523**	**1.3974**	**7.9497**	**3.3675**	**1.2856**	**4.6531**		**2,936.8068**	**2,936.8068**	**0.9292**		**2,960.0361**

Unmitigated Construction Off-Site

	ROG	NOx	CO	SO2	Fugitive PM10	Exhaust PM10	PM10 Total	Fugitive PM2.5	Exhaust PM2.5	PM2.5 Total	Bio- CO2	NBio- CO2	Total CO2	CH4	N2O	CO2e
Category	lb/day										lb/day					
Hauling	0.0000	0.0000	0.0000	0.0000	0.0000	0.0000	0.0000	0.0000	0.0000	0.0000		0.0000	0.0000	0.0000		0.0000
Vendor	0.0000	0.0000	0.0000	0.0000	0.0000	0.0000	0.0000	0.0000	0.0000	0.0000		0.0000	0.0000	0.0000		0.0000
Worker	0.0707	0.0475	0.4762	1.1700e-003	0.1232	8.6000e-004	0.1241	0.0327	7.9000e-004	0.0335		116.2271	116.2271	3.9100e-003		116.3250
Total	**0.0707**	**0.0475**	**0.4762**	**1.1700e-003**	**0.1232**	**8.6000e-004**	**0.1241**	**0.0327**	**7.9000e-004**	**0.0335**		**116.2271**	**116.2271**	**3.9100e-003**		**116.3250**

Mitigated Construction On-Site

	ROG	NOx	CO	SO2	Fugitive PM10	Exhaust PM10	PM10 Total	Fugitive PM2.5	Exhaust PM2.5	PM2.5 Total	Bio- CO2	NBio- CO2	Total CO2	CH4	N2O	CO2e
Category	lb/day										lb/day					
Fugitive Dust					2.9486	0.0000	2.9486	1.5154	0.0000	1.5154			0.0000			0.0000
Off-Road	2.5805	28.3480	16.2934	0.0297		1.3974	1.3974		1.2856	1.2856	0.0000	2,936.8068	2,936.8068	0.9292		2,960.0361
Total	**2.5805**	**28.3480**	**16.2934**	**0.0297**	**2.9486**	**1.3974**	**4.3459**	**1.5154**	**1.2856**	**2.8009**	**0.0000**	**2,936.8068**	**2,936.8068**	**0.9292**		**2,960.0361**

Mitigated Construction Off-Site

	ROG	NOx	CO	SO2	Fugitive PM10	Exhaust PM10	PM10 Total	Fugitive PM2.5	Exhaust PM2.5	PM2.5 Total	Bio- CO2	NBio- CO2	Total CO2	CH4	N2O	CO2e

Category	lb/day										lb/day					
Hauling	0.0000	0.0000	0.0000	0.0000	0.0000	0.0000	0.0000	0.0000	0.0000	0.0000		0.0000	0.0000	0.0000		0.0000
Vendor	0.0000	0.0000	0.0000	0.0000	0.0000	0.0000	0.0000	0.0000	0.0000	0.0000		0.0000	0.0000	0.0000		0.0000
Worker	0.0707	0.0475	0.4762	1.1700e-003	0.1232	8.6000e-004	0.1241	0.0327	7.9000e-004	0.0335		116.2271	116.2271	3.9100e-003		116.3250
Total	**0.0707**	**0.0475**	**0.4762**	**1.1700e-003**	**0.1232**	**8.6000e-004**	**0.1241**	**0.0327**	**7.9000e-004**	**0.0335**		**116.2271**	**116.2271**	**3.9100e-003**		**116.3250**

3.4 Building Construction - 2019

Unmitigated Construction On-Site

	ROG	NOx	CO	SO2	Fugitive PM10	Exhaust PM10	PM10 Total	Fugitive PM2.5	Exhaust PM2.5	PM2.5 Total	Bio- CO2	NBio- CO2	Total CO2	CH4	N2O	CO2e
Category	lb/day										lb/day					
Off-Road	2.3612	21.0788	17.1638	0.0269		1.2899	1.2899		1.2127	1.2127		2,591.5802	2,591.5802	0.6313		2,607.3635
Total	**2.3612**	**21.0788**	**17.1638**	**0.0269**		**1.2899**	**1.2899**		**1.2127**	**1.2127**		**2,591.5802**	**2,591.5802**	**0.6313**		**2,607.3635**

Unmitigated Construction Off-Site

	ROG	NOx	CO	SO2	Fugitive PM10	Exhaust PM10	PM10 Total	Fugitive PM2.5	Exhaust PM2.5	PM2.5 Total	Bio- CO2	NBio- CO2	Total CO2	CH4	N2O	CO2e
Category	lb/day										lb/day					
Hauling	0.0000	0.0000	0.0000	0.0000	0.0000	0.0000	0.0000	0.0000	0.0000	0.0000		0.0000	0.0000	0.0000		0.0000
Vendor	0.1316	3.9799	0.9343	9.3100e-003	0.2303	0.0262	0.2565	0.0663	0.0250	0.0913		981.0781	981.0781	0.0737		982.9214
Worker	0.3862	0.2596	2.6034	6.3800e-003	0.6736	4.6800e-003	0.6783	0.1787	4.3100e-003	0.1830		635.3751	635.3751	0.0214		635.9100

Total	**0.5178**	**4.2395**	**3.5378**	**0.0157**	**0.9040**	**0.0308**	**0.9348**	**0.2450**	**0.0293**	**0.2743**		**1,616.4532**	**1,616.4532**	**0.0951**		**1,618.8314**

Mitigated Construction On-Site

	ROG	NOx	CO	SO2	Fugitive PM10	Exhaust PM10	PM10 Total	Fugitive PM2.5	Exhaust PM2.5	PM2.5 Total	Bio- CO2	NBio- CO2	Total CO2	CH4	N2O	CO2e
Category	lb/day										lb/day					
Off-Road	2.3612	21.0788	17.1638	0.0269		1.2899	1.2899		1.2127	1.2127	0.0000	2,591.5802	2,591.5802	0.6313		2,607.3635
Total	**2.3612**	**21.0788**	**17.1638**	**0.0269**		**1.2899**	**1.2899**		**1.2127**	**1.2127**	**0.0000**	**2,591.5802**	**2,591.5802**	**0.6313**		**2,607.3635**

Mitigated Construction Off-Site

	ROG	NOx	CO	SO2	Fugitive PM10	Exhaust PM10	PM10 Total	Fugitive PM2.5	Exhaust PM2.5	PM2.5 Total	Bio- CO2	NBio- CO2	Total CO2	CH4	N2O	CO2e
Category	lb/day										lb/day					
Hauling	0.0000	0.0000	0.0000	0.0000	0.0000	0.0000	0.0000	0.0000	0.0000	0.0000		0.0000	0.0000	0.0000		0.0000
Vendor	0.1316	3.9799	0.9343	9.3100e-003	0.2303	0.0262	0.2565	0.0663	0.0250	0.0913		981.0781	981.0781	0.0737		982.9214
Worker	0.3862	0.2596	2.6034	6.3800e-003	0.6736	4.6800e-003	0.6783	0.1787	4.3100e-003	0.1830		635.3751	635.3751	0.0214		635.9100
Total	**0.5178**	**4.2395**	**3.5378**	**0.0157**	**0.9040**	**0.0308**	**0.9348**	**0.2450**	**0.0293**	**0.2743**		**1,616.4532**	**1,616.4532**	**0.0951**		**1,618.8314**

3.5 Paving - 2019

Unmitigated Construction On-Site

	ROG	NOx	CO	SO2	Fugitive PM10	Exhaust PM10	PM10 Total	Fugitive PM2.5	Exhaust PM2.5	PM2.5 Total	Bio- CO2	NBio- CO2	Total CO2	CH4	N2O	CO2e
Category	lb/day										lb/day					
Off-Road	1.2679	12.7604	12.3130	0.0189		0.7196	0.7196		0.6637	0.6637		1,843.3191	1,843.3191	0.5671		1,857.4966
Paving	0.3595					0.0000	0.0000		0.0000	0.0000			0.0000			0.0000
Total	**1.6274**	**12.7604**	**12.3130**	**0.0189**		**0.7196**	**0.7196**		**0.6637**	**0.6637**		**1,843.3191**	**1,843.3191**	**0.5671**		**1,857.4966**

Unmitigated Construction Off-Site

	ROG	NOx	CO	SO2	Fugitive PM10	Exhaust PM10	PM10 Total	Fugitive PM2.5	Exhaust PM2.5	PM2.5 Total	Bio- CO2	NBio- CO2	Total CO2	CH4	N2O	CO2e
Category	lb/day										lb/day					
Hauling	0.0000	0.0000	0.0000	0.0000	0.0000	0.0000	0.0000	0.0000	0.0000	0.0000		0.0000	0.0000	0.0000		0.0000
Vendor	0.0000	0.0000	0.0000	0.0000	0.0000	0.0000	0.0000	0.0000	0.0000	0.0000		0.0000	0.0000	0.0000		0.0000
Worker	0.0942	0.0633	0.6350	1.5600e-003	0.1643	1.1400e-003	0.1654	0.0436	1.0500e-003	0.0446		154.9695	154.9695	5.2200e-003		155.1000
Total	**0.0942**	**0.0633**	**0.6350**	**1.5600e-003**	**0.1643**	**1.1400e-003**	**0.1654**	**0.0436**	**1.0500e-003**	**0.0446**		**154.9695**	**154.9695**	**5.2200e-003**		**155.1000**

Mitigated Construction On-Site

	ROG	NOx	CO	SO2	Fugitive PM10	Exhaust PM10	PM10 Total	Fugitive PM2.5	Exhaust PM2.5	PM2.5 Total	Bio- CO2	NBio- CO2	Total CO2	CH4	N2O	CO2e
Category	lb/day										lb/day					

Off-Road	1.2679	12.7604	12.3130	0.0189		0.7196	0.7196		0.6637	0.6637	0.0000	1,843.3191	1,843.3191	0.5671		1,857.4966
Paving	0.3595					0.0000	0.0000		0.0000	0.0000			0.0000			0.0000
Total	**1.6274**	**12.7604**	**12.3130**	**0.0189**		**0.7196**	**0.7196**		**0.6637**	**0.6637**	**0.0000**	**1,843.3191**	**1,843.3191**	**0.5671**		**1,857.4966**

Mitigated Construction Off-Site

	ROG	NOx	CO	SO2	Fugitive PM10	Exhaust PM10	PM10 Total	Fugitive PM2.5	Exhaust PM2.5	PM2.5 Total	Bio- CO2	NBio- CO2	Total CO2	CH4	N2O	CO2e
Category	lb/day										lb/day					
Hauling	0.0000	0.0000	0.0000	0.0000	0.0000	0.0000	0.0000	0.0000	0.0000	0.0000		0.0000	0.0000	0.0000		0.0000
Vendor	0.0000	0.0000	0.0000	0.0000	0.0000	0.0000	0.0000	0.0000	0.0000	0.0000		0.0000	0.0000	0.0000		0.0000
Worker	0.0942	0.0633	0.6350	1.5600e-003	0.1643	1.1400e-003	0.1654	0.0436	1.0500e-003	0.0446		154.9695	154.9695	5.2200e-003		155.1000
Total	**0.0942**	**0.0633**	**0.6350**	**1.5600e-003**	**0.1643**	**1.1400e-003**	**0.1654**	**0.0436**	**1.0500e-003**	**0.0446**		**154.9695**	**154.9695**	**5.2200e-003**		**155.1000**

3.6 Architectural Coating - 2019

Unmitigated Construction On-Site

	ROG	NOx	CO	SO2	Fugitive PM10	Exhaust PM10	PM10 Total	Fugitive PM2.5	Exhaust PM2.5	PM2.5 Total	Bio- CO2	NBio- CO2	Total CO2	CH4	N2O	CO2e
Category	lb/day										lb/day					
Archit. Coating	8.7987					0.0000	0.0000		0.0000	0.0000			0.0000			0.0000
Off-Road	0.2664	1.8354	1.8413	2.9700e-003		0.1288	0.1288		0.1288	0.1288		281.4481	281.4481	0.0238		282.0423
Total	**9.0651**	**1.8354**	**1.8413**	**2.9700e-003**		**0.1288**	**0.1288**		**0.1288**	**0.1288**		**281.4481**	**281.4481**	**0.0238**		**282.0423**

Unmitigated Construction Off-Site

	ROG	NOx	CO	SO2	Fugitive PM10	Exhaust PM10	PM10 Total	Fugitive PM2.5	Exhaust PM2.5	PM2.5 Total	Bio- CO2	NBio- CO2	Total CO2	CH4	N2O	CO2e
Category	lb/day										lb/day					
Hauling	0.0000	0.0000	0.0000	0.0000	0.0000	0.0000	0.0000	0.0000	0.0000	0.0000		0.0000	0.0000	0.0000		0.0000
Vendor	0.0000	0.0000	0.0000	0.0000	0.0000	0.0000	0.0000	0.0000	0.0000	0.0000		0.0000	0.0000	0.0000		0.0000
Worker	0.0754	0.0507	0.5080	1.2500e-003	0.1314	9.1000e-004	0.1324	0.0349	8.4000e-004	0.0357		123.9756	123.9756	4.1800e-003		124.0800
Total	**0.0754**	**0.0507**	**0.5080**	**1.2500e-003**	**0.1314**	**9.1000e-004**	**0.1324**	**0.0349**	**8.4000e-004**	**0.0357**		**123.9756**	**123.9756**	**4.1800e-003**		**124.0800**

Mitigated Construction On-Site

	ROG	NOx	CO	SO2	Fugitive PM10	Exhaust PM10	PM10 Total	Fugitive PM2.5	Exhaust PM2.5	PM2.5 Total	Bio- CO2	NBio- CO2	Total CO2	CH4	N2O	CO2e
Category	lb/day										lb/day					
Archit. Coating	8.7987					0.0000	0.0000		0.0000	0.0000			0.0000			0.0000
Off-Road	0.2664	1.8354	1.8413	2.9700e-003		0.1288	0.1288		0.1288	0.1288	0.0000	281.4481	281.4481	0.0238		282.0423
Total	**9.0651**	**1.8354**	**1.8413**	**2.9700e-003**		**0.1288**	**0.1288**		**0.1288**	**0.1288**	**0.0000**	**281.4481**	**281.4481**	**0.0238**		**282.0423**

Mitigated Construction Off-Site

	ROG	NOx	CO	SO2	Fugitive PM10	Exhaust PM10	PM10 Total	Fugitive PM2.5	Exhaust PM2.5	PM2.5 Total	Bio- CO2	NBio- CO2	Total CO2	CH4	N2O	CO2e

Category	lb/day										lb/day					
Hauling	0.0000	0.0000	0.0000	0.0000	0.0000	0.0000	0.0000	0.0000	0.0000	0.0000		0.0000	0.0000	0.0000		0.0000
Vendor	0.0000	0.0000	0.0000	0.0000	0.0000	0.0000	0.0000	0.0000	0.0000	0.0000		0.0000	0.0000	0.0000		0.0000
Worker	0.0754	0.0507	0.5080	1.2500e-003	0.1314	9.1000e-004	0.1324	0.0349	8.4000e-004	0.0357		123.9756	123.9756	4.1800e-003		124.0800
Total	**0.0754**	**0.0507**	**0.5080**	**1.2500e-003**	**0.1314**	**9.1000e-004**	**0.1324**	**0.0349**	**8.4000e-004**	**0.0357**		**123.9756**	**123.9756**	**4.1800e-003**		**124.0800**

4.0 Operational Detail - Mobile

4.1 Mitigation Measures Mobile

	ROG	NOx	CO	SO2	Fugitive PM10	Exhaust PM10	PM10 Total	Fugitive PM2.5	Exhaust PM2.5	PM2.5 Total	Bio- CO2	NBio- CO2	Total CO2	CH4	N2O	CO2e
Category	lb/day										lb/day					
Mitigated	3.5574	24.1053	34.3074	0.1168	8.2924	0.1085	8.4008	2.2192	0.1021	2.3212		11,928.7951	11,928.7951	0.8156		11,949.1844
Unmitigated	3.5574	24.1053	34.3074	0.1168	8.2924	0.1085	8.4008	2.2192	0.1021	2.3212		11,928.7951	11,928.7951	0.8156		11,949.1844

4.2 Trip Summary Information

	Average Daily Trip Rate			Unmitigated	Mitigated
Land Use	Weekday	Saturday	Sunday	Annual VMT	Annual VMT
Medical Office Building	1,987.15	492.80	85.25	2,939,733	2,939,733
Other Non-Asphalt Surfaces	0.00	0.00	0.00		
Parking Lot	0.00	0.00	0.00		
Total	1,987.15	492.80	85.25	2,939,733	2,939,733

4.3 Trip Type Information

	Miles			Trip %			Trip Purpose %		
Land Use	H-W or C-W	H-S or C-C	H-O or C-NW	H-W or C-W	H-S or C-C	H-O or C-NW	Primary	Diverted	Pass-by
Medical Office Building	9.50	7.30	7.30	29.60	51.40	19.00	60	30	10
Other Non-Asphalt Surfaces	9.50	7.30	7.30	0.00	0.00	0.00	0	0	0
Parking Lot	9.50	7.30	7.30	0.00	0.00	0.00	0	0	0

4.4 Fleet Mix

Land Use	LDA	LDT1	LDT2	MDV	LHD1	LHD2	MHD	HHD	OBUS	UBUS	MCY	SBUS	MH
Medical Office Building	0.546179	0.037976	0.179086	0.122965	0.018430	0.005460	0.017497	0.061396	0.001337	0.001657	0.006117	0.000817	0.001082
Other Non-Asphalt Surfaces	0.546179	0.037976	0.179086	0.122965	0.018430	0.005460	0.017497	0.061396	0.001337	0.001657	0.006117	0.000817	0.001082
Parking Lot	0.546179	0.037976	0.179086	0.122965	0.018430	0.005460	0.017497	0.061396	0.001337	0.001657	0.006117	0.000817	0.001082

5.0 Energy Detail

Historical Energy Use: N

5.1 Mitigation Measures Energy

	ROG	NOx	CO	SO2	Fugitive PM10	Exhaust PM10	PM10 Total	Fugitive PM2.5	Exhaust PM2.5	PM2.5 Total	Bio- CO2	NBio- CO2	Total CO2	CH4	N2O	CO2e
Category	lb/day										lb/day					
NaturalGas Mitigated	5.6400e-003	0.0513	0.0431	3.1000e-004		3.9000e-003	3.9000e-003		3.9000e-003	3.9000e-003		61.5149	61.5149	1.1800e-003	1.1300e-003	61.8805
NaturalGas Unmitigated	5.6400e-003	0.0513	0.0431	3.1000e-004		3.9000e-003	3.9000e-003		3.9000e-003	3.9000e-003		61.5149	61.5149	1.1800e-003	1.1300e-003	61.8805

5.2 Energy by Land Use - NaturalGas

Unmitigated

	NaturalGas Use	ROG	NOx	CO	SO2	Fugitive PM10	Exhaust PM10	PM10 Total	Fugitive PM2.5	Exhaust PM2.5	PM2.5 Total	Bio- CO2	NBio- CO2	Total CO2	CH4	N2O	CO2e
Land Use	kBTU/yr	lb/day										lb/day					
Medical Office Building	522.877	5.6400e-003	0.0513	0.0431	3.1000e-004		3.9000e-003	3.9000e-003		3.9000e-003	3.9000e-003		61.5149	61.5149	1.1800e-003	1.1300e-003	61.8805
Other Non-Asphalt Surfaces	0	0.0000	0.0000	0.0000	0.0000		0.0000	0.0000		0.0000	0.0000		0.0000	0.0000	0.0000	0.0000	0.0000
Parking Lot	0	0.0000	0.0000	0.0000	0.0000		0.0000	0.0000		0.0000	0.0000		0.0000	0.0000	0.0000	0.0000	0.0000
Total		**5.6400e-003**	**0.0513**	**0.0431**	**3.1000e-004**		**3.9000e-003**	**3.9000e-003**		**3.9000e-003**	**3.9000e-003**		**61.5149**	**61.5149**	**1.1800e-003**	**1.1300e-003**	**61.8805**

Mitigated

	NaturalGas Use	ROG	NOx	CO	SO2	Fugitive PM10	Exhaust PM10	PM10 Total	Fugitive PM2.5	Exhaust PM2.5	PM2.5 Total	Bio- CO2	NBio- CO2	Total CO2	CH4	N2O	CO2e
Land Use	kBTU/yr	lb/day										lb/day					
Medical Office Building	0.522877	5.6400e-003	0.0513	0.0431	3.1000e-004		3.9000e-003	3.9000e-003		3.9000e-003	3.9000e-003		61.5149	61.5149	1.1800e-003	1.1300e-003	61.8805
Other Non-Asphalt Surfaces	0	0.0000	0.0000	0.0000	0.0000		0.0000	0.0000		0.0000	0.0000		0.0000	0.0000	0.0000	0.0000	0.0000
Parking Lot	0	0.0000	0.0000	0.0000	0.0000		0.0000	0.0000		0.0000	0.0000		0.0000	0.0000	0.0000	0.0000	0.0000
Total		**5.6400e-003**	**0.0513**	**0.0431**	**3.1000e-004**		**3.9000e-003**	**3.9000e-003**		**3.9000e-003**	**3.9000e-003**		**61.5149**	**61.5149**	**1.1800e-003**	**1.1300e-003**	**61.8805**

6.0 Area Detail

6.1 Mitigation Measures Area

	ROG	NOx	CO	SO2	Fugitive PM10	Exhaust PM10	PM10 Total	Fugitive PM2.5	Exhaust PM2.5	PM2.5 Total	Bio- CO2	NBio- CO2	Total CO2	CH4	N2O	CO2e
Category	lb/day										lb/day					
Mitigated	1.6131	3.1000e-004	0.0340	0.0000		1.2000e-004	1.2000e-004		1.2000e-004	1.2000e-004		0.0724	0.0724	1.9000e-004		0.0773
Unmitigated	1.6131	3.1000e-004	0.0340	0.0000		1.2000e-004	1.2000e-004		1.2000e-004	1.2000e-004		0.0724	0.0724	1.9000e-004		0.0773

6.2 Area by SubCategory

Unmitigated

	ROG	NOx	CO	SO2	Fugitive PM10	Exhaust PM10	PM10 Total	Fugitive PM2.5	Exhaust PM2.5	PM2.5 Total	Bio- CO2	NBio- CO2	Total CO2	CH4	N2O	CO2e
SubCategory	lb/day										lb/day					
Architectural Coating	0.3785					0.0000	0.0000		0.0000	0.0000			0.0000			0.0000
Consumer Products	1.2314					0.0000	0.0000		0.0000	0.0000			0.0000			0.0000
Landscaping	3.2000e-003	3.1000e-004	0.0340	0.0000		1.2000e-004	1.2000e-004		1.2000e-004	1.2000e-004		0.0724	0.0724	1.9000e-004		0.0773
Total	**1.6131**	**3.1000e-004**	**0.0340**	**0.0000**		**1.2000e-004**	**1.2000e-004**		**1.2000e-004**	**1.2000e-004**		**0.0724**	**0.0724**	**1.9000e-004**		**0.0773**

Mitigated

	ROG	NOx	CO	SO2	Fugitive PM10	Exhaust PM10	PM10 Total	Fugitive PM2.5	Exhaust PM2.5	PM2.5 Total	Bio- CO2	NBio- CO2	Total CO2	CH4	N2O	CO2e

SubCategory	lb/day										lb/day					
Architectural Coating	0.3785					0.0000	0.0000		0.0000	0.0000			0.0000			0.0000
Consumer Products	1.2314					0.0000	0.0000		0.0000	0.0000			0.0000			0.0000
Landscaping	3.2000e-003	3.1000e-004	0.0340	0.0000		1.2000e-004	1.2000e-004		1.2000e-004	1.2000e-004		0.0724	0.0724	1.9000e-004		0.0773
Total	**1.6131**	**3.1000e-004**	**0.0340**	**0.0000**		**1.2000e-004**	**1.2000e-004**		**1.2000e-004**	**1.2000e-004**		**0.0724**	**0.0724**	**1.9000e-004**		**0.0773**

7.0 Water Detail

7.1 Mitigation Measures Water

8.0 Waste Detail

8.1 Mitigation Measures Waste

9.0 Operational Offroad

Equipment Type	Number	Hours/Day	Days/Year	Horse Power	Load Factor	Fuel Type

10.0 Stationary Equipment

Fire Pumps and Emergency Generators

Equipment Type	Number	Hours/Day	Hours/Year	Horse Power	Load Factor	Fuel Type

Boilers

Equipment Type	Number	Heat Input/Day	Heat Input/Year	Boiler Rating	Fuel Type

User Defined Equipment

Equipment Type	Number

11.0 Vegetation

Table 2: Screening Table for Implementation of GHG Reduction Measures for Commercial Development

Feature	Description	Assigned Point Values	Project Points
Reduction Measure PS E3: Commercial/Industrial Energy Efficiency Development			
Building Envelope			
Insulation	2008 baseline (walls R-13; roof/attic R-30)	0 points	18
	Modestly Enhanced Insulation (walls R-13, roof/attic R-38))	15 points	
	Enhanced Insulation (rigid wall insulation R-13, roof/attic R-38)	18 points	
	Greatly Enhanced Insulation (spray foam insulated walls R-15 or higher, roof/attic R-38 or higher)	20 points	
Windows	2008 Baseline Windows (0.57 U-factor, 0.4 solar heat gain coefficient [SHGC})	0 points	7
	Modestly Enhanced Window Insulation (0.4 U-factor, 0.32 SHGC)	7 points	
	Enhanced Window Insulation (0.32 U-factor, 0.25 SHGC)	8 points	
	Greatly Enhanced Window Insulation (0.28 or less U-factor, 0.22 or less SHGC)	12 points	
Cool Roof	Modest Cool Roof (CRRC Rated 0.15 aged solar reflectance, 0.75 thermal emittance)	12 points	16
	Enhanced Cool Roof (CRRC Rated 0.2 aged solar reflectance, 0.75 thermal emittance)	14 points	
	Greatly Enhanced Cool Roof (CRRC Rated 0.35 aged solar reflectance, 0.75 thermal emittance)	16 points	
Air Infiltration	Minimizing leaks in the building envelope is as important as the insulation properties of the building. Insulation does not work effectively if there is excess air leakage.		12
	Air barrier applied to exterior walls, calking, and visual inspection such as the HERS Verified Quality Insulation Installation (QII or equivalent)	12 points	
	Blower Door HERS Verified Envelope Leakage or equivalent	10 points	
Thermal Storage of Building	Thermal storage is a design characteristic that helps keep a constant temperature in the building. Common thermal storage devices include strategically placed water filled columns, water storage tanks, and thick masonry walls.		
	Modest Thermal Mass (10% of floor or 10% of walls 12" or more thick exposed concrete or masonry with no permanently installed floor covering such as carpet, linoleum, wood or other insulating materials)	4 points	
	Enhanced Thermal Mass (20% of floor or 20% of walls 12" or more thick exposed concrete or masonry with no permanently installed floor covering such as carpet, linoleum, wood or other insulating materials)	6 points	

53 points this sheet

Feature	Description	Assigned Point Values	Project Points
	Enhanced Thermal Mass (80% of floor or 80% of walls 12" or more thick exposed concrete or masonry with no permanently installed floor covering such as carpet, linoleum, wood or other insulating materials)	24 points	
Indoor Space Efficiencies			
Heating/ Cooling Distribution System	Minimum Duct Insulation (R-4.2 required)	0 points	8
	Modest Duct insulation (R-6)	8 points	
	Enhanced Duct Insulation (R-8)	10 points	
	Distribution loss reduction with inspection (HERS Verified Duct Leakage or equivalent)	14 points	
Space Heating/ Cooling Equipment	2008 Minimum HVAC Efficiency (EER 13/75% AFUE or 7.7 HSPF)	0 points	7
	Improved Efficiency HVAC (EER 14/78% AFUE or 8 HSPF)	7 points	
	High Efficiency HVAC (EER 15/80% AFUE or 8.5 HSPF)	8 points	
	Very High Efficiency HVAC (EER 16/82% AFUE or 9 HSPF)	12 points	
Commercial Heat Recovery Systems	Heat recovery strategies employed with commercial laundry, cooking equipment, and other commercial heat sources for reuse in HVAC air intake or other appropriate heat recovery technology. Point values for these types of systems will be determined based upon design and engineering data documenting the energy savings.	TBD	
Water Heaters	2008 Minimum Efficiency (0.57 Energy Factor)	0 points	19
	Improved Efficiency Water Heater (0.675 Energy Factor)	14 points	
	High Efficiency Water Heater (0.72 Energy Factor)	16 points	
	Very High Efficiency Water Heater (0.92 Energy Factor)	19 points	
	Solar Pre-heat System (0.2 Net Solar Fraction)	4 points	
	Enhanced Solar Pre-heat System (0.35 Net Solar Fraction)	8 points	
Daylighting	Daylighting is the ability of each room within the building to provide outside light during the day reducing the need for artificial lighting during daylight hours.		
	All peripheral rooms within building have at least one window or skylight	1 points	
	All rooms within building have daylight (through use of windows, solar tubes, skylights, etc.)	5 points	
	All rooms daylighted	7 points	
Artificial Lighting	2008 Minimum (required)	0 points	
	Efficient Lights (25% of in-unit fixtures considered high efficacy. High efficacy is defined as 40 lumens/watt for 15 watt or less fixtures; 50 lumens/watt for 15-40 watt fixtures, 60 lumens/watt for fixtures >40watt)	9 points	

34 points this sheet

Feature	Description	Assigned Point Values	Project Points
	High Efficiency Lights (50% of in-unit fixtures are high efficacy) Very High Efficiency Lights (100% of in-unit fixtures are high efficacy)	12 points 14 points	12
Appliances	Star Commercial Refrigerator (new) Energy Star Commercial Dish Washer (new) Energy Star Commercial Cloths Washing	4 points 4 points 4 points	
Miscellaneous Commercial/Industrial Building Efficiencies			
Building Placement	North/South alignment of building or other building placement such that the orientation of the buildings optimizes conditions for natural heating, cooling, and lighting.	6 point	6
Shading	At least 90% of south-facing glazing will be shaded by vegetation or overhangs at noon on Jun 21st.	6 Points	
Other	This allows innovation by the applicant to provide design features that increases the energy efficiency of the project not provided in the table. Note that engineering data will be required documenting the energy efficiency of innovative designs and point values given based upon the proven efficiency beyond Title 24 Energy Efficiency Standards.	TBD	
Existing Commercial building Retrofits	The applicant may wish to provide energy efficiency retrofit projects to existing commercial buildings to further the point value of their project. Retrofitting existing commercial buildings within the City is a key reduction measure that is needed to reach the reduction goal. The potential for an applicant to take advantage of this program will be decided on a case by case basis and must have the approval of the City Planning Department. The decision to allow applicants to ability to participate in this program will be evaluated based upon, but not limited to the following: Will the energy efficiency retrofit project benefit low income or disadvantaged communities? Does the energy efficiency retrofit project fit within the overall assumptions in the reduction measure associated with commercial building energy efficiency retrofits? Does the energy efficiency retrofit project provide co-benefits important to the City? Point value will be determined based upon engineering and design criteria of the energy efficiency retrofit project.	TBD	

18 points this sheet

Feature	Description	Assigned Point Values	Project Points
Reduction Measure PS E4: Commercial/Industrial Renewable Energy			
Photovoltaic	Solar Photovoltaic panels installed on commercial buildings or in collective arrangements within a commercial development such that the total power provided augments:		
	Solar Ready Roofs (sturdy roof and electric hookups)	2 points	
	10 percent of the power needs of the project	8 points	8
	20 percent of the power needs of the project	14 points	
	30 percent of the power needs of the project	20 points	
	40 percent of the power needs of the project	26 points	
	50 percent of the power needs of the project	32 points	
	60 percent of the power needs of the project	38 points	
	70 percent of the power needs of the project	44 points	
	80 percent of the power needs of the project	50 points	
	90 percent of the power needs of the project	56 points	
	100 percent of the power needs of the project	60 points	
Wind turbines	Some areas of the City lend themselves to wind turbine applications. Analysis of the areas capability to support wind turbines should be evaluated prior to choosing this feature.		
	Wind turbines as part of the commercial development such that the total power provided augments:		
	10 percent of the power needs of the project	8 points	
	20 percent of the power needs of the project	14 points	
	30 percent of the power needs of the project	20 points	
	40 percent of the power needs of the project	26 points	
	50 percent of the power needs of the project	32 points	
	60 percent of the power needs of the project	38 points	
	70 percent of the power needs of the project	44 points	
	80 percent of the power needs of the project	50 points	
	90 percent of the power needs of the project	56 points	
	100 percent of the power needs of the project	60 points	
Off-site renewable energy project	The applicant may submit a proposal to supply an off-site renewable energy project such as renewable energy retrofits of existing commercial/industrial that will help implement reduction measures associated with existing buildings. These off-site renewable energy retrofit project proposals will be determined on a case by case basis accompanied by a detailed plan documenting the quantity of renewable energy the proposal will generate. Point values will be based upon the energy generated by the proposal.	TBD	

8 points this sheet

Feature	Description	Assigned Point Values	Project Points
Other Renewable Energy Generation	The applicant may have innovative designs or unique site circumstances (such as geothermal) that allow the project to generate electricity from renewable energy not provided in the table. The ability to supply other renewable energy and the point values allowed will be decided based upon engineering data documenting the ability to generate electricity.	TBD	
Reduction Measure PS W2: Commercial/Industrial Water Conservation			
Irrigation and Landscaping			
Water Efficient Landscaping	Eliminate conventional turf from landscaping Only moderate water using plants Only low water using plants Only California Native landscape that requires no or only supplemental irrigation	0 points 3 points 4 points 8 points	
Trees	Increase tree planting in parking areas 50% beyond City Code requirements	TBD	
Water Efficient irrigation systems	Low precipitation spray heads< .75”/hr or drip irrigation Weather based irrigation control systems combined with drip irrigation (demonstrate 20 reduced water use)	1 point 5 points	
Recycled Water	Recycled water connection (purple pipe)to irrigation system on site	5 points	
Storm water Reuse Systems	Innovative on-site stormwater collection, filtration and reuse systems are being developed that provide supplemental irrigation water and provide vector control. These systems can greatly reduce the irrigation needs of a project. Point values for these types of systems will be determined based upon design and engineering data documenting the water savings.	TBD	
Potable Water			
Showers	Water Efficient Showerheads (2.0 gpm)	3 points	3
Toilets	Water Efficient Toilets/Urinals (1.5gpm) Waterless Urinals (note that commercial buildings having both waterless urinals and high efficiency toilets will have a combined point value of 6 points)	3 points 4 points	3
Faucets	Water Efficient faucets (1.28gpm)	3 points	3
Commercial Dishwashers	Water Efficient dishwashers (20% water savings)	4 points	
Commercial Laundry Washers	Water Efficient laundry (15% water savings) High Efficiency laundry Equipment that captures and reuses rinse water (30% water savings)	3 points 6 points	

9 points this sheet

Feature	Description	Assigned Point Values	Project Points
Commercial Water Operations Program	Establish an operational program to reduce water loss from pools, water features, etc., by covering pools, adjusting fountain operational hours, and using water treatment to reduce draw down and replacement of water. Point values for these types of plans will be determined based upon design and engineering data documenting the water savings.	TBD	
Reduction Measure PS T1: Land Use Based Trips and VMT Reduction			
Mixed Use	Mixes of land uses that complement one another in a way that reduces the need for vehicle trips can greatly reduce GHG emissions. The point value of mixed use projects will be determined based upon traffic studies that demonstrate trip reductions and/or reductions in vehicle miles traveled	TBD	
Local Retail Near Residential (Commercial only Projects)	Having residential developments within walking and biking distance of local retail helps to reduce vehicle trips and/or vehicle miles traveled. The point value of residential projects in close proximity to local retail will be determined based upon traffic studies that demonstrate trip reductions and/or reductions in vehicle miles traveled	TBD	
Reduction Measure PS T2: Bicycle Infrastructure			
Bicycle Infrastructure	Provide bicycle paths within project boundaries. Provide bicycle path linkages between project site and other land uses. Provide bicycle path linkages between project site and transit.	TBD 2 points 5 points	
Reduction Measure PS T3: Electric Vehicle Infrastructure			
Electric Vehicles	Provide public charging station for use by an electric vehicle (ten points for each charging station within the facility).	10 points	80
Reduction Measure PS T4: Employee Based Trip &VMT Reduction Policy			
Compressed Work Week	Reduce the number of days per week that employees need to be on site will reduce the number of vehicle trips associated with commercial/industrial development. Compressed work week such that full time employees are on site: 5 days per week 4 days per week on site 3 days per week on site	TBD	
Car/Vanpools	Car/vanpool program Car/vanpool program with preferred parking Car/vanpool with guaranteed ride home program Subsidized employee incentive car/vanpool program Combination of all the above	TBD	
Employee	Complete sidewalk to residential within ½ mile	TBD	

80 points this sheet

Feature	Description	Assigned Point Values	Project Points
Bicycle/ Pedestrian Programs	Complete bike path to residential within 3 miles Bike lockers and secure racks Showers and changing facilities Subsidized employee walk/bike program (Note combine all applicable points for total value)		
Shuttle/Transit Programs	Local transit within ¼ mile Light rail transit within ½ mile Shuttle service to light rail transit station Guaranteed ride home program Subsidized Transit passes Note combine all applicable points for total value	TBD	
CRT	Employer based Commute Trip Reduction (CRT). CRTs apply to commercial, offices, or industrial projects that include a reduction of vehicle trip or VMT goal using a variety of employee commutes trip reduction methods. The point value will be determined based upon a TIA that demonstrates the trip/VMT reductions. Suggested point ranges: Incentive based CRT Programs (1-8 points) Mandatory CRT programs (5-20 points)	TBD	
Other Trip Reductions	Other trip or VMT reduction measures not listed above with TIA and/or other traffic data supporting the trip and/or VMT for the project.	TBD	
Total Points from Commercial/Industrial Project:			202

CARLSBAD
FRESNO
IRVINE
LOS ANGELES
PALM SPRINGS
POINT RICHMOND
RIVERSIDE
ROSEVILLE
SAN LUIS OBISPO

October 10, 2018

Mr. Skyler Denniston, Senior Land Use Manager
National Facilities Services
Kaiser Permanente
393 East Walnut Street, Fourth Floor
Pasadena, California 91188

Subject: Kaiser Permanente Medical Office Project: Results of a Biological Resources Assessment (LSA Project No. KSP1801)

Dear Mr. Denniston:

LSA is pleased to present this letter report summarizing the results of a biological resources assessment for the Kaiser Permanente Medical Office (Project). The approximately 10-acre Project is located in the City of Hesperia, San Bernardino County, California. The Project is situated southeast of Interstate 15 (I-15), south of Main Street, and west of Escondido Avenue. Specifically, the Project lies within the northeast quarter of Section 23, Township 4 North, Range 5 West, as depicted on the *Hesperia*, *California* United States Geological Survey (USGS) 7.5-minute quadrangle (Figure 1; all figures are provided as Attachment A).

The proposed Project is an approximately 55,000-square foot medical office building and associated parking.

METHODS

Literature Review

A literature review was conducted to determine the existence or potential occurrence of special-status plant and animal species on or in the vicinity of the Project. Database records for the *Hesperia, California* USGS 7.5-minute quadrangle within a three-mile radius of the Project were searched on May 1, 2018, using the California Department of Fish and Wildlife's Natural Diversity Data Base application *Rarefind 5* (CDFW CNDDB, v 2018) and the California Native Plant Society's *Electronic Inventory of Rare and Endangered Vascular Plants of California* (CNPS online edition, v8-03 0.39, http://www.cnps.org/inventory). Aerial photographs (Google 2018) were reviewed and U.S. Fish and Wildlife Service (USFWS) listed species and designated critical habitat information was used to determine the locations of any listed species sightings and critical habitat boundaries on and in the vicinity of the Project. Soil types were determined using the WebSoil Survey (USDA/NRCS, http://websoilsurvey.sc.egov.usda.gov).

Field Surveys

Reconnaissance Field Survey

A general reconnaissance-level field survey was conducted on May 3, 2018, by LSA Biologist Denise Woodard between the hours of 0920 and 1145 to identify vegetation communities, habitats for

1500 Iowa Avenue, Suite 200, Riverside, California 92507 951.781.9310 www.lsa.net

LSA is a business name of LSA Associates, Inc.

special-status species, potential jurisdictional waters, and other biological resource issues. The entire Project study area was surveyed on foot. Notes were taken on general site conditions, vegetation, and suitability of habitat for various special-status elements. All plant and animal species observed or otherwise detected during this field survey were noted and are provided as Attachment B.

Desert Tortoise Focused Survey

A desert tortoise survey was conducted according to currently accepted survey protocol, *Preparing for Any Action that May Occur With the Range of the Mojave Desert Tortoise (*Gopherus agassizii*)* (USFWS, Version: August 31, 2017). The survey protocol was modified so as not to include areas outside the Project study area based on the lack of rights of access to survey adjoining properties.

The field survey was conducted on May 3, 2018, by LSA Biologist Denise Woodard. The survey area was surveyed using belt transects spaced approximately 30 feet apart between the hours of 0920 and 1145 The weather during the survey period was generally mild, with air temperatures ranging from 63 to 64 degrees Fahrenheit, partly cloudy skies (70 percent), and winds ranging from 10 to 15 miles per hour. The desert tortoise survey report is provided as Attachment C.

Burrowing Owl Habitat Assessment and Focused Survey

The burrowing owl survey, including a habitat assessment, was conducted according to the *Staff Report on Burrowing Owl Mitigation, State of California Natural Resource Agency, Department of Fish and Game, May 7, 2012.* The survey protocol requires four field visits, the first between February 15 and April 15, and three visits between April 15 and July 15. Due to the timing of Project start up, the first field visit between February 15 and April 15 was not conducted.

The survey was conducted by LSA Biologist Denise Woodard by walking transects spaced from 30 to 50 feet wide, and stopping periodically to search for owls with the use of binoculars. Potential habitat outside the survey area and within 500 feet of the Project alignment was scanned with binoculars as feasible. Potential burrows, such as fossorial mammal burrows, as well as other manmade structures (e.g., earthen berms, concrete culverts, concrete, asphalt, rock, or wood debris piles, or openings beneath concrete or asphalt pavement) were examined for owl sign (e.g., feathers, pellets, whitewash, and prey remnants). Table A provides the survey data for each survey visit and the burrowing owl survey report is provided as Attachment D.

Table A: Burrowing Owl Survey Dates, Times, and Weather Conditions

Field Visit	Date (2018)	Time (24–Hour)	Weather Conditions		
			Temperature (°F)	Wind (mph)	Cloud Cover (%)
Habitat Assessment and Survey 1	May 3	0920–1145	63–64	10–15	70
Survey 2	June 22	0630–0840	64–70	1–3	40
Survey 3	July 14	0600–0815	72–77	3–5	0

Mohave Ground Squirrel Habitat Assessment

LSA Biologist Leo Simone, who is authorized by the CDFW to trap for Mohave ground squirrel (*Xerospermophilus mohavensis*) (MGS) under Scientific Collecting permit number SC-005243, coordinated with the CDFW to assess whether or not trapping would be required to determine the

presence/absence of MGS on the Project study area. Mr. Simone sent a letter to Scott Osborne and Esther Burkett of the CDFW on August 14, 2018 to make this request. Following the letter, Mr. Simone arranged a field meeting on September 21, 2018, with Heather Elder, CDFW, to show her the existing Project study area conditions in order to help determine whether or not trapping would be required. Ms. Elder provided concurrence that trapping would not be required in an email dated October 2, 2018. Correspondence with the CDFW is provided as Attachment E.

Joshua Tree

A Joshua Tree Relocation Plan was prepared to document the results of the protected desert native plant survey effort for Joshua trees (*Yucca brevifolia*). The survey was conducted by LSA Biologist Leo Simone (ISA Certified Arborist/Tree Risk Assessor WE-8491A) on June 28, 2018, with assistance from LSA Assistant Biologist Heather Monteleone. The Joshua Tree Relocation Plan Report is provided as Attachment F.

RESULTS AND DISCUSSION

Elevation, Topography, and Soils

The Project study area is undeveloped and is bordered by commercial development to the north, Escondido Avenue and commercial development to the east, and undeveloped land to the south and west. The Project study area has been affected by Off-highway vehicle (OHV) use, homeless encampments, and trash dumping.

The Project study area is relatively flat, at an elevation of approximately 3,500 feet above mean sea level. The soils within and in the vicinity of the survey area, as mapped by the *Natural Resource Conservation District Soil Data Mart SSURGO metadata and GIS maps,* http://soildatamart.nrcs.usda.gov/ (2006), are Hesperia loamy fine sand, 2 to 5 percent slopes, and Cajon Sand, 9 to 15 percent slopes (Figure 2).

Vegetation and Land Cover

The dominant plant community on site is best described as *Yucca Brevifolia* Woodland Alliance (Joshua tree woodland) (Sawyer, et al. 2009). Dominant plant species identified in this community include Joshua tree, California juniper (*Juniperus californica*), and Nevada jointfir (*Ephedra nevadensis*).

Wildlife

Wildlife species observed during the field survey include common side-blotched lizard (*Uta stansburiana*), common raven (*Corvus corax*), mainland cactus wren (*Campylorhynchus brunneicapillus anthonyi*), and black-tailed jackrabbit (*Lepus californicus deserticola*). A complete list of species observed during the field surveys is provided as Attachment B.

Potential Jurisdictional Waters, Wetlands and Streambeds

The U.S. Army Corps of Engineers (USACE), under Section 404 of the Federal Clean Water Act (CWA), regulates discharges of dredged or fill material into “waters of the United States.” These waters include wetlands and non-wetland bodies of water that meet specific criteria, including a connection to interstate commerce. This connection may be direct (through a tributary system linking a stream

channel with traditional navigable waters used in interstate or foreign commerce) or it may be indirect (through a connection identified in USACE regulations). The USACE typically regulates as non-wetland waters of the U.S. any body of water displaying an "ordinary high water mark" (OHWM). In order to be considered a "jurisdictional wetland" under Section 404, an area must possess hydrophytic vegetation, hydric soils, and wetland hydrology. The CDFW, under Sections 1600 et seq. of the California Fish and Game Code, regulates alterations to lakes, rivers, and streams. A stream is defined by the presence of a channel bed and banks and at least an occasional flow of water. The Regional Water Quality Control Board (RWQCB) is responsible for the administration of Section 401 of the CWA, through water quality certification of any activity that may result in a discharge to jurisdictional waters of the U.S. The RWQCB may also regulate discharges to "waters of the State," including wetlands, under the California Porter-Cologne Water Quality Control Act.

No drainage features, ponded areas, wetlands, or riparian habitat subject to jurisdiction of the CDFW, USACE, and/or RWQCB were found within the Project study area.

Threatened and Endangered Species

Under provisions of Section 7(a)(2) of the Federal Endangered Species Act (FESA), a federal agency that permits, licenses, funds, or otherwise authorizes a Project activity must consult with the USFWS to ensure that its actions would not jeopardize the continued existence of any listed threatened or endangered species or destroy or adversely modify critical habitat. The USFWS designates as threatened or endangered, species that are at risk of extinction and may also adopt recovery plans that identify specific areas that are essential to the conservation of a listed species. Critical habitat areas that may require special management considerations or protections can also be designated.

The California Endangered Species Act (CESA) is administered by the CDFW and prohibits the "take" of plant and animal species identified as either threatened or endangered in the State of California by the Fish and Game Commission (Fish and Game Code Section 2050 to 2097). "Take" is defined as hunt, pursue, catch, capture, or kill. Sections 2091 and 2081 of the CESA allow the CDFW to authorize exceptions to the prohibition of "take" of State-listed threatened or endangered plant and animal species for purposes such as public and private development. The CDFW requires formal consultation to ensure that a proposed Project's actions would not jeopardize the continued existence of any listed species or destroy or adversely affect listed species' habitats.

Two federally listed species, desert tortoise and MGS, are known from the Project area. No federally designated critical habitat is present on or in the immediate vicinity of the Project study area.

The desert tortoise and MGS are discussed in further detail below.

Desert Tortoise

The Mojave population of the desert tortoise was listed as a federally endangered species by emergency rule on August 4, 1989, and as a threatened species by final rule on April 2, 1990. Federally designated critical habitat for the Mojave Desert population was finalized in February 1994. Mojave desert tortoises primarily inhabit creosote bush scrub, saltbush scrub, and Joshua tree woodland, generally below approximately 5,000 feet in elevation.

The results of the desert tortoise survey (Attachment C) found no desert tortoise or desert tortoise sign within the Project study area. There are no recorded occurrences of the desert tortoise within a three-mile radius of the Project study area. The Project study area is not within designated critical habitat for this species or within any Desert Wildlife Management Areas proposed for the desert tortoise identified in the draft West Mojave Plan (Bureau of Land Management [BLM] 2005).

Based on the results of the focused desert tortoise survey and the lack of desert tortoise occurrences within a three-mile radius of the Project study area, the species is considered absent from the Project study area. Therefore, the Project will have no effects on the desert tortoise.

Mohave Ground Squirrel

The MGS was listed as threatened in 1984 under CESA. The MGS inhabits desert areas with deep sandy or gravelly friable soils and an abundance of annual herbaceous vegetation. This species prefers arid flat terrains with desert shrubs. Habitat for the MGS occurs in alluvial fans where desert pavement is absent including creosote bush scrub, shadscale scrub, alkali sink, and Joshua tree woodland. Nests are in underground burrows. Individuals may use several different burrows.

The Project study area is in a highly developed area that is cut off from known MGS populations by Interstate 15 (I-15) to the west and by the California Aqueduct to the east. The nearest known MGS population is a remnant population in Adelanto, which is more than 10 miles to the north. The property to the adjoining north of the site consists of a retail parking lot and vacant, graded land. Escondido Avenue abuts the site to the east, with vacant, graded land with a gravel cover and a Walmart farther east (13401 Main Street). Although the properties to the adjoining south and west of the site consist of vacant, undeveloped land, these parcels are heavily disturbed and scattered with miscellaneous household trash throughout.

Based on coordination with the CDFW, the CDFW determined that trapping surveys would not be required to determine the presence/absence of the MGS on the Project study area. Therefore, MGS is considered absent from the Project study area.

Non-listed Special-Status Species

The CDFW, USFWS, local agencies, and special-status groups, such as the CNPS, maintain lists of species that they consider to be in need of monitoring. Legal protection for these special-status species varies widely. Table B summarizes special-status species known to occur in the region, along with their status, habitat and distribution, activity/bloom period, and probability of occurrence.

Table B: Special-Status Species Occurrence Probability

Species	Status	Habitat and Distribution	Activity Period	Occurrence Probability
Plants				
Opuntia basilaris var. *brachyclada* **Short-joint beavertail**	US: – CA: 1B	Sandy soil or coarse, granitic loam in chaparral, Joshua tree woodland, Mojavean desert scrub, and pinyon-juniper woodland at 425 to 1,800 meters (1,400 to 5,900 feet) elevation in the Providence Mountains and desert slopes of the San Gabriel and San Bernardino Mountains.	Blooms April through June; identifiable year-round (perennial stem	Habitat on the Project is considered to be of low quality. No beavertail cactus species were observed during the 2018 field surveys and is

Table B: Special-Status Species Occurrence Probability

Species	Status	Habitat and Distribution	Activity Period	Occurrence Probability
		Known only from Los Angeles and San Bernardino Counties, California.	succulent)	considered absent from the Project study area.
Birds				
Accipiter cooperii (nesting) **Cooper's hawk**	US: – CA: SA	Forages in a wide range of habitats, but primarily in forests and woodlands. These include natural areas as well as human-created habitats such as plantations and ornamental trees in urban landscapes. Usually nests in tall trees (20 to 60 feet) in extensive forested areas (generally woodlots of 4 to 8 hectares with canopy closure of greater than 60 percent). Occasionally nests in isolated trees in more open areas.	Year-round	Suitable nesting habitat (extensive forested areas) is not present within the Project study area. This species may utilize the Project study area during foraging activities.
Athene cunicularia (burrow sites) **Burrowing owl**	US: – CA: SSC (breeding)	Open country in much of North and South America. Usually occupies ground squirrel burrows in open, dry grasslands, agricultural and range lands, railroad rights-of-way, and margins of highways, golf courses, and airports. Often utilizes man-made structures, such as earthen berms, cement culverts, cement, asphalt, rock, or wood debris piles. They avoid thick, tall vegetation, brush, and trees, but may occur in areas where brush or tree cover is less than 30 percent.	Year-round	This species was not observed during the focused survey conducted for this species and is considered absent.
Lanius ludovicianus (nesting) **Loggerhead shrike**	US: – CA: SSC (breeding)	Prefers open habitats with scattered small trees and with fences, utility lines, or other perches. Inhabits open country with short vegetation, pastures, old orchards, cemeteries, golf courses, riparian areas, and open woodlands. Highest density occurs in open-canopied valley foothill hardwood, valley foothill hardwood-conifer, valley foothill riparian, pinyon-juniper, juniper, desert riparian, and Joshua tree habitats. Occurs only rarely in heavily urbanized areas, but often found in open cropland. Found in open country in much of North America.	Year-round	The Joshua tree woodland within the Project study area may provide moderately suitable habitat for this species. This species was not observed during the 2018 field surveys.
Setophagia petechia (nesting) **Yellow warbler**	US: – CA: SSC (breeding)	Riparian woodland while nesting in the western U.S. and northwestern Baja California; more widespread in brushy areas and woodlands during migration. Occurs from western Mexico to northern South America in winter. Migrants are widespread and common. Three subspecies breed in California: *morcomi, brewsteri,* and *sonorana.* (Sonoran yellow warbler nests along the Colorado River.)	Summer, winter, or Year-round, depending on locale	Suitable riparian woodland is absent from the Project study area, and this species is considered absent.

CA: State Classifications

SSC Species of Special Concern. Refers to animals with vulnerable or seriously declining populations.

SA Special Animal. Refers to any other animal monitored by the Natural Diversity Data Base, regardless of its legal or rarity status.

1B California Rare Plant Rank 1B: rare, threatened or endangered in California and elsewhere.

The species identified in Table B have a limited population distribution in southern California and development is further reducing their ranges and numbers. These species have no official State or federal protection status but require consideration under the California Environmental Quality Act (CEQA).

Five special-status species, as shown in Table B, are known from the Project survey area. Four of these species (short-joint beavertail, Cooper's hawk, burrowing owl, and yellow warbler) are considered absent based on the lack of suitable habitat or determined to be absent based on the results of focused and other field surveys. One special-status bird species, loggerhead shrike, has the potential to utilize the habitat within the Project study area. A pre-construction survey for the loggerhead shrike and other nesting/migratory birds will be required to avoid any Project effects.

In addition, although the burrowing owl was determined to be absent from the Project study area, the burrowing owl is a mobile species and may subsequently occupy the Project study area. A pre-construction survey in compliance with *Staff Report on Burrowing Owl Mitigation, State of California Natural Resource Agency, Department of Fish and Game, May 7, 2012* (CDFW 2012) will be required to ensure Project effects to the burrowing owl are avoided.

Wildlife Movement, Corridors, and Nursery Sites

The Project study area is located in an area of encroaching development and has been regionally isolated by I-15 to the west and by the California Aqueduct to the east. As a result, the Project study area does not provide for regional wildlife movement or serve as a regional wildlife corridor. The Project study area does not contain nursery sites, such as bat colony roosting sites or colonial bird nesting areas.

Nesting/Migratory Birds

Nesting bird species are protected by California Fish and Game Code Sections 3503 and 3503.5, and by the Migratory Bird Treaty Act (MBTA) of 1918 (16 USC 703–711), which make it unlawful to take, possess, or needlessly destroy the nest or eggs of any migratory bird or bird of prey.

To ensure compliance with the California Fish and Game Code and to avoid potential impacts to nesting birds, it is recommended that the vegetation removal activities be conducted outside the general bird nesting season (January 15 through August 31). If vegetation cannot be removed outside the bird nesting season, a pre-construction nesting bird survey by a qualified biologist is required prior to vegetation removal.

Natural Communities of Concern

Joshua tree woodland Project is a CDFW natural community of concern. Joshua trees are also protected from harvesting without a permit under the CDFW California Desert Native Plants Act, Division 23 of the Food and Agricultural Code (CDNPA), and Chapter 16.24 of the City of Hesperia's Municipal Code, established to comply with the CDNPA.

The Project will result in the loss of 10 acres of Joshua tree woodland and is considered to be an incremental loss of this natural community in the region. A Joshua Tree Relocation Plan has been

prepared in accordance with Chapter 16.24 of the City of Hesperia's Municipal Code in order to mitigate impacts to Joshua trees as a result of the proposed Project. A total of 39 Joshua trees were inventoried on the proposed Project study area. Of those Joshua trees, 19 are suitable for transplant and salvage efforts. The 19 trees will either be transplanted on site or adopted through an adoption program in accordance with the Joshua Tree Relocation Plan (Attachment E).

Local Policies and Ordinances

The Project is subject to Chapter 16.24 of the City of Hesperia's Municipal Code, established to comply with the CDNPA, which protects non-listed native desert plants, such as Joshua tree. As stated previously, a Joshua tree Relocation Plan has been prepared to comply with Chapter 16.24 of the City of Hesperia's Municipal Code. A permit from the City of Hesperia will be required prior to any relocation of Joshua trees.

Adopted Habitat Conservation Plans

The Project is within The California Desert Conservation Area Plan (CDCA) (BLM 1980). The Project is also within The West Mojave Plan (BLM 2005), and The Desert Renewable Energy Conservation Plan (DRECP) (BLM 2015) plan areas. The West Mojave Plan and DRECP are amendments to the CDCA.

The BLM issued a Record of Decision for the West Mojave Plan in 2006. The West Mojave Plan has not been formally adopted.

The BLM issued a Record of Decision for Phase 1 of the DRECP in 2016. The Project is not within a DRECP renewable energy development focus areas.

IMPACTS AND RECOMMENDATIONS

Jurisdictional Waters, Wetlands and Streambeds

No drainage features, ponded areas, wetlands, or riparian habitat subject to jurisdiction of the CDFW, USACE, and/or RWQCB were found within the Project study area. Therefore, the proposed Project will have no effects to jurisdictional waters regulated by the CDFW, USACE and RWQCB.

Threatened and Endangered Species

The desert tortoise and MGS are considered to be absent from the Project study area. Therefore, the proposed Project will have no effects to these two federally/State listed species.

Non-listed Special-Status Species

To avoid effects to the burrowing owl (in compliance with *Staff Report on Burrowing Owl Mitigation, State of California Natural Resource Agency, Department of Fish and Game, May 7, 2012* [CDFW 2012]), a pre-construction burrowing owl clearance survey would be required to be completed no more than 14 days before initiation of grading, and a second survey be completed within 24 hours prior to grading. If burrowing owls are detected during the pre-construction surveys, coordination with the CDFW will be required to determine appropriate minimization and avoidance measures.

Wildlife Movement, Corridors, and Nursery Sites

The Project study area does not support regional wildlife movement, wildlife corridors, or nursery sites; therefore, the proposed Project will have no effects related to this topic.

Nesting/Migratory Birds

To avoid impacts to nesting/migratory birds, such as the loggerhead shrike, vegetation-clearing activities on the Project should be scheduled outside of the bird nesting season (February 1 through August 31). If construction activities are planned during the bird nesting season, a pre-construction nesting bird survey should be conducted within three days (72 hours) prior to commencement to avoid impacts to birds protected under the California Fish and Game Code and MBTA.

Natural Communities of Concern

The Project will result in the loss of 10 acres of Joshua tree woodland and is considered to be an incremental loss of this natural community in the region. To offset the loss of Joshua tree woodland, the Project's Joshua Tree Relocation Plan will be implemented prior to the initiation of construction activities in accordance with Chapter 16.24 of the City of Hesperia's Municipal Code. With implementation of the Joshua Tree Relocation Plan, Project effects to Joshua tree woodland are not considered significant.

Local Policies and Ordinances

The Project is subject to Chapter 16.24 of the City of Hesperia's Municipal Code, established to comply with the CDNPA. The Project's Joshua Tree Relocation Plan will be implemented prior to the initiation of construction activities in accordance with Chapter 16.24 of the City of Hesperia's Municipal Code.

Adopted Habitat Conservation Plans

The Project will not conflict with the conservation criteria associated with the CDCA or DRECP. The West Mojave Plan has not been formally adopted.

Indirect Effects

Indirect effects to surrounding areas as a result of the proposed Project may include, but are not limited to, noise, lighting, traffic, and increased storm water runoff. Although indirect effects are anticipated on sensitive biological resources on adjacent undeveloped land south of the Project, indirect effects are not anticipated to be substantial due to the following factors:

- Relatively small footprint of the Project (10 acres);
- The Project's close proximity to I-15;
- The Project's proximity to the California Aqueduct; and
- The Project's adjacency to commercial development and established roadways.

Cumulative Effects

The proposed Project will result in and incremental loss of 10 acres of Joshua tree woodland in the region. The Project is not expected to result in substantial cumulative effects due to the following factors:

- Existing adjacent commercial development north and east of the Project;
- The Project's Proximity to I-15;
- The Project's proximity to the California Aqueduct;
- The Project area does not function as a corridor for wildlife movement; and
- The Project's existing and adjacent effects of OHV use, trash dumping, and homeless encampments.

Sincerely,

LSA ASSOCIATES, INC.

Denise Woodard
Associate/Senior Biologist

Attachments: References
Attachment A: Figures
Attachment B: Species Observed
Attachment C: Desert Tortoise Survey
Attachment D: Burrowing Owl Survey
Attachment E: CDFW Mohave Ground Squirrel Correspondence
Attachment F: Joshua Tree Relocation Plan

REFERENCES

California Department of Fish and Wildlife. 2018. Natural Diversity Data Base. RareFind 5.

California Native Plant Society Electronic Inventory (CNPSEI), Online Edition, v8-03 0.39. Website: http://www.cnps.org/inventory.

City of Hesperia Municipal Code. June 27, 2018. Available online at https://www.municode.com/library/ca/hesperia/codes/code_of_ordinances.

Sawyer, Keeler-Wolf, and Evens. 2009. *A Manual of California Vegetation*. California Native Plant Society Press, Sacramento, California.

State of California Natural Resource Agency, Department of Fish and Game*. May 7, 2012. Staff Report on Burrowing Owl Mitigation.*

United States Department of Agriculture, Natural Resources Conservation Service*.* 2006*. Soil Survey Geographic (SSURGO) Database for Riverside County, CA, 2003.* Available online at http://soildatamart.nrcs.usda.gov.

U.S. Department of the Interior Bureau of Land Management (BLM). 1980. California Desert Conservation Area Plan Amendment. Available online at https://eplanning.blm.gov/epl-front-office/eplanning/planAndProjectSite.do?methodName=dispatchToPatternPage&currentPageId=96700.

U.S. Department of the Interior Bureau of Land Management (BLM). 2005. *West Mojave Plan: A Habitat Conservation and California Desert Conservation Area Plan Amendment. Final Environmental Impact Report and Statement.* Vols. 1 and 2 . Available online at https://www.blm.gov/ca/pdfs/cdd_pdfs/wemo_pdfs/plan/wemo/Vol-1-Chapter1_Bookmarks.pdf.

U.S. Department of the Interior Bureau of Land Management (BLM). 2016. Desert Renewable Energy Conservation Plan and Record of Decision. Available online at https://www.drecp.org/.

U.S. Department of the Interior Bureau of Land Management (BLM). 2006. *Record of Decision, West Mohave Plan, Amendment to the California Desert Conservation Area Plan.* Available online at https://www.blm.gov/ca/pdfs/cdd_pdfs/wemo_pdfs/wemo_rod_3-06.pdf.

Attachment A: Figures

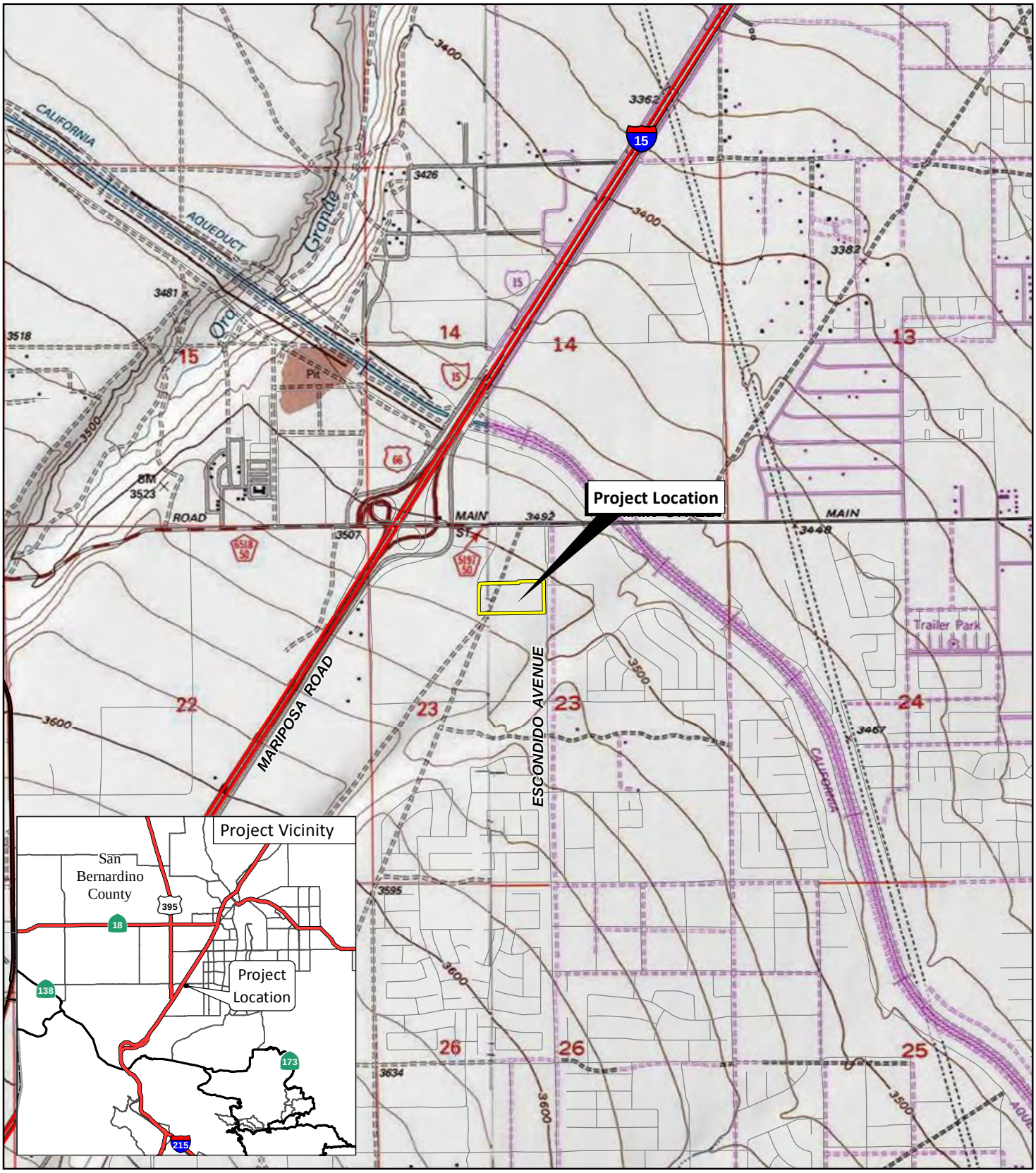

LSA

FIGURE 1

0 1000 2000
FEET

Hesperia Kaiser Permanente Medical Office Building

Regional and Project Location

SOURCE: USGS 7.5' Quads: Hesperia, 1980, Baldy Mesa, 1988, CA; ESRI Streetmap, 2013.

I:\KSP1801\Reports\Cultural\fig1_RegLoc.mxd (6/26/2018)

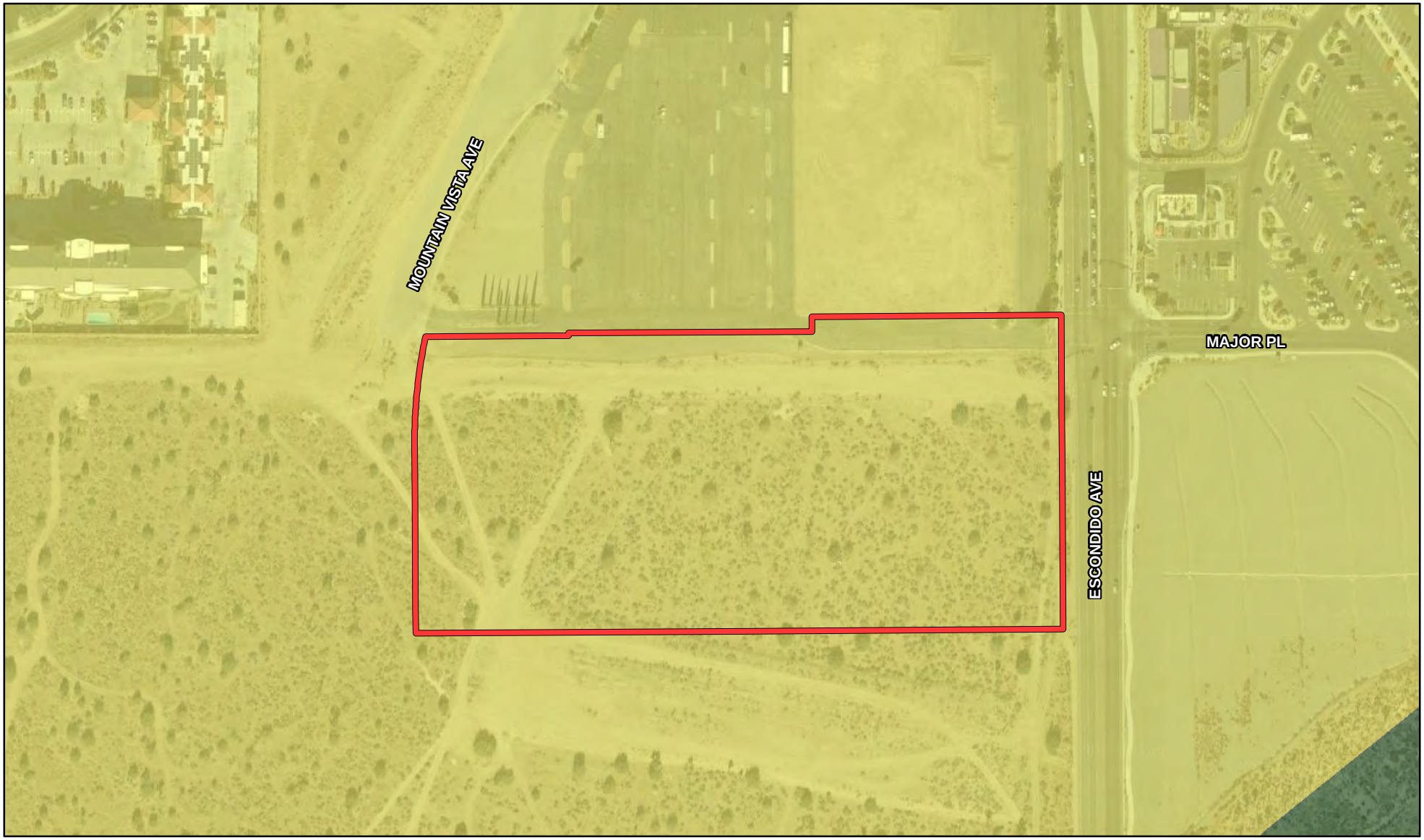

LSA

FIGURE 2

LEGEND

Study Area

Soils

Cajon Sand, 9-15% Slopes

Hesperia Loamy Fine Sand, 2-5% Slopes

N

0 125 250

FEET

Hesperia Kaiser Permanente Medical Office Building

Soils

SOURCE: Google (2016); USDA (09/11/2017)

I:\KSP1801\GIS\MXD\DesertTortoise_BurrowingOwl\Soils.mxd (8/13/2018)

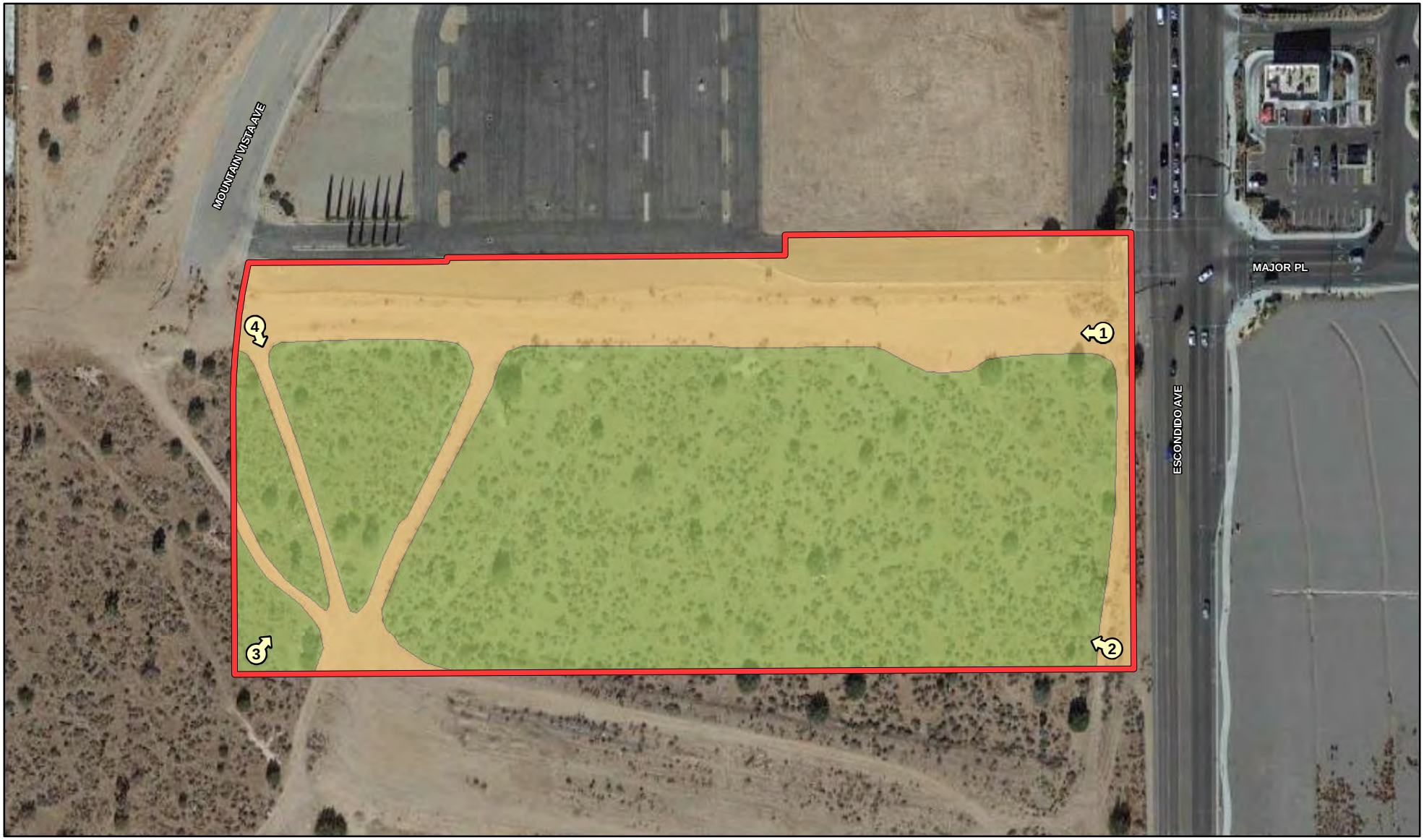

LSA

LEGEND

Study Area

Vegetation

Developed/Disturbed

Joshua Tree Woodland

Photograph Locations

N

0 90 180

FEET

SOURCE: Google (2016)

FIGURE 3

Hesperia Kaiser Permanente Medical Office Building

Vegetation, Land Use, and Photograph Locations

I:\KSP1801\GIS\MXD\DesertTortoise_BurrowingOwl\Veg_LandUse_PhotoLoc.mxd (8/13/2018)

1. View of area disturbed by off highway vehicle use.

2. View of Joshua tree woodland vegetation.

3. View of Joshua tree woodland vegetation.

4. View of general survey area.

LSA

FIGURE 4

Hesperia Kaiser Permanente Medical Building

Site Photographs

Attachment B: Species Observed

Species Observed

Scientific Name	Common Name
CONIFERS	
Cupressaceace	**Cypress family**
Juniperus californica	California juniper
GNETOPHYTES	
Ephedraceae	**Ephedra family**
Ephedra nevadensis	Nevada jointfir
EUDICOTS	
Asteraceae	**Sunflower family**
Ambrosia salsola	Burrobrush
Ericameria nauseosa	Rubber rabbitbrush
Brassicaceae	**Mustard family**
Hirschfeldia incana (non-native species)	Shortpod mustard
Sisymbrium irio (non-native species)	London rocket
Cactaceae	**Cactus family**
Cylindropuntia acanthocarpa	Buck-horn cholla
Chenopodiaceae	**Saltbush family**
Atriplex polycarpa	Cattle saltbush
Krascheninnikovia lanata	Winter fat
Salsola tragus (non-native species)	Russian thistle
Lamiaceae	**Mint family**
Scutellaria mexicana	Bladder sage
Solanaceae	**Nightshade family**
Lycium cooperi	Peach thorn
Zygophyllaceace	**Caltrop family**
Larrea tridentata	Creosote bush
MONOCOTS	
Agavaceae	**Agave family**
Yucca brevifolia	Joshua tree
Poaceae	**Grass family**
Bromus madritensis ssp. *rubens* (non-native species)	Red brome
Schismus barbatus (non-native species)	Common Mediterranean grass
REPTILIA	**REPTILES**
Phrynosomatidae	**Phrynosomatid Lizards**
Uta stansburiana	Common side-blotched lizard
AVES	**BIRDS**
Tyrannidae	**Tyrant Flycatchers**
Sayornis saya	Say's phoebe
Corvidae	**Crows and Ravens**
Corvus corax	Common raven

Species Observed

Scientific Name	Common Name
Alaudidae	**Larks**
Eremophila alpestris actia	California horned lark
Troglodytidae	**Wrens**
Campylorhynchus brunneicapillus anthonyi	Mainland cactus wren
Passeridae	**Old World Sparrows**
Passer domesticus (non-native species)	House sparrow
Fringillidae	**Finches**
Haemorhous mexicanus	House finch
MAMMALIA	**MAMMALS**
Sciuridae	**Squirrels**
Spermophilus beecheyi	California ground squirrel
Leporidae	**Rabbits and Hares**
Lepus californicus deserticola	Black-tailed jackrabbit
Sylvilagus audubonii	Desert cottontail
Canidae	**Foxes, Wolves and Dogs**
Canis familiaris (non-native species)	Feral dog

Attachment C: Desert Tortoise Survey

CARLSBAD
FRESNO
IRVINE
LOS ANGELES
PALM SPRINGS
POINT RICHMOND
RIVERSIDE
ROSEVILLE
SAN LUIS OBISPO

August 13, 2018

Mr. Skyler Denniston, Senior Land Use Manager
National Facilities Services
Kaiser Permanente
393 East Walnut Street, Fourth Floor
Pasadena, California 91188

Subject: Kaiser Permanente Medical Office Project—Desert Tortoise Survey Results (LSA Project No. KSP1801)

Dear Mr. Denniston:

This letter serves to document the results of a survey for desert tortoise (*Gopherus agassizii*) conducted on the above-referenced project site by LSA. The project site encompasses approximately 10 acres. Geographically, the project site is in the northeast quarter of Section 23, Township 4 North, Range 5 West, as shown on the *Hesperia*, *California* United States Geological Survey (USGS) 7.5-minute quadrangle (Figure 1; all figures attached).

SURVEY AREA

The project site or survey area (Figure 2) is relatively flat, at an elevation of approximately 3,500 feet. The soil within the survey area, as mapped by the *Natural Resource Conservation District Soil Data Mart SSURGO metadata and GIS maps,* http://soildatamart.nrcs.usda.gov/ (2006), is Hesperia loamy fine sand, 2 to 5 percent slopes. The dominant plant community on site is best described as Joshua tree woodland. Dominant plant species identified in this community include Joshua tree (*Yucca brevifolia*), California juniper (*Juniperus californica*), and Nevada jointfir (*Ephedra nevadensis*). The project site is bordered by commercial development on the north, by Escondido Avenue and commercial development on the east, and by undeveloped land to the south and west.

BACKGROUND

The Mojave population of the desert tortoise was listed as a federally endangered species by emergency rule on August 4, 1989, and as a threatened species by final rule on April 2, 1990. The Mojave population includes all desert tortoises north and west of the Colorado River in California, southern Nevada, northwestern Arizona, and southwestern Utah. Federally designated critical habitat for the Mojave Desert population was finalized in February 1994, and includes portions of the Mojave and Colorado Deserts that contain "the primary constituent elements and focuses on areas that are essential to the species' recovery" (USFWS 1994). In 2017, the United States Fish and Wildlife Service (USFWS) revised the survey protocol for *Preparing for Any Action that May Occur With the Range of the Mojave Desert Tortoise (*Gopherus agassizii*)*. When present, desert tortoise may be detected by various signs, including burrows, tracks, scat, egg shell fragments, courtship rings, carcasses, or skeletal remains.

1500 Iowa Avenue, Suite 200, Riverside, California 92507 951.781.9310 www.lsa.net

LSA is a business name of LSA Associates, Inc.

Mojave desert tortoises primarily inhabit creosote bush scrub, saltbush scrub, and Joshua tree woodland dominated by creosote bush (*Larrea tridentata*), white bursage (*Ambrosia dumosa*), cactus, saltbush (*Atriplex* spp.), or Joshua tree, generally below approximately 5,000 feet in elevation. Although tortoises may occur in canyon bottoms and on rocky hillsides in California, they are most often found on level ground, especially adjacent to washes. Desert tortoises typically burrow in areas with firm soil and may remain in their burrows throughout the year when unfavorable conditions occur, such as prolonged drought. Burrows are typically found at the bases of shrubs, but may occur in the open. Desert tortoises use two types of burrows, "brumation burrows" and "pallet burrows." Brumation burrows, which may extend many feet below the ground, are used in summer aestivation (heat avoidance and decreased food availability) and winter hibernation (cold avoidance). Several "brumating" tortoises may be found in a single burrow. Pallet burrows are excavated to avoid temperature fluctuations. They are typically one to three feet deep and may not be long enough to conceal the tortoise.

Desert tortoises are most active in spring, early summer, and fall, when annual plants are most abundant. They are in a state of torpor or hibernation during the winter. Tortoises usually emerge in late February or early March and may be active during the summer if there are rains or when temperatures are moderate. They are herbivores and feed on a variety of plants, including annual plants and perennial grasses.

Threats to desert tortoise include loss or degradation of habitat by off-highway vehicles (OHVs), military training maneuvers, mineral extraction activities, grazing by livestock, agricultural and residential activities, and disease.

METHODS

The desert tortoise survey was conducted according to currently accepted survey protocol, *Preparing for Any Action that May Occur With the Range of the Mojave Desert Tortoise (*Gopherus agassizii*)* (USFWS, Version: August 31, 2017). The survey protocol was modified so as not to include areas outside the project site based on the lack of rights of access to survey adjoining properties.

The field survey was conducted on May 3, 2018, by LSA biologist Denise Woodard. The survey area was surveyed using belt transects spaced approximately 30 feet apart.

The survey was conducted between 9:20 a.m. and 11:45 a.m. The weather during the survey period was generally mild, with air temperatures ranging from 63 to 64 degrees Fahrenheit (17 to 18 degrees Celsius), partly cloudy skies (70 percent), and winds ranging from 10 to 15 miles per hour. A USFWS Desert Tortoise Pre-Project Survey Data Sheet (attached) was completed summarizing the results of the field survey.

RESULTS

The Joshua woodland habitat within the survey area and adjacent undeveloped open space areas provides potentially suitable habitat for the desert tortoise. The habitats on site have been affected by OHV use, homeless encampments, and trash dumping. Common raven (*Corvus corax*), a known predator of the desert tortoise, was observed during the survey. Site photographs are provided as Figure 3.

No desert tortoise or desert tortoise sign were observed within the survey area; therefore, the species is considered absent from the project site at this time. In addition, the survey area is not within designated critical habitat for this species or within any Desert Wildlife Management Areas proposed for the desert tortoise identified in the draft West Mojave Habitat Conservation Plan.

Please contact me by phone at (951) 781-9310 or by email at denise.woodard@lsa.net with any questions you may have regarding this survey.

Sincerely,

LSA ASSOCIATES, INC.

Denise Woodard
Associate/Senior Biologist

Cc: U.S. Fish and Wildlife Service, Palm Springs Fish and Wildlife Office

Attachments: Figure 1: Regional and Project Location
Figure 2: Desert Tortoise Survey Area
Figure 3: Site Photographs
Desert Tortoise Pre-Project Survey Data Sheet

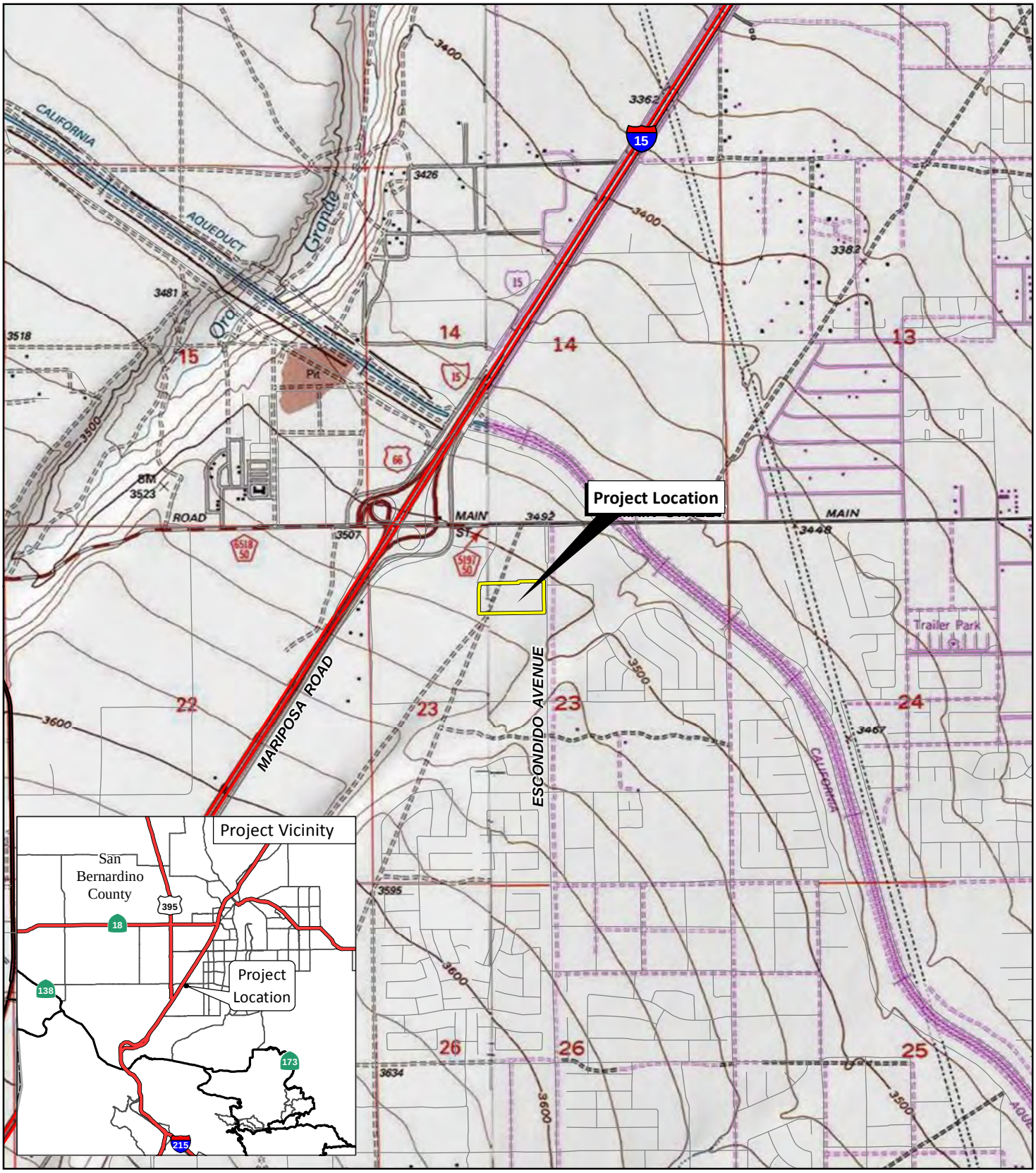

LSA

FIGURE 1

0 1000 2000
FEET

Hesperia Kaiser Permanente Medical Office Building

Regional and Project Location

SOURCE: USGS 7.5' Quads: Hesperia, 1980, Baldy Mesa, 1988, CA; ESRI Streetmap, 2013.

I:\KSP1801\Reports\Cultural\fig1_RegLoc.mxd (6/26/2018)

LSA

LEGEND

Survey Area

Photograph Locations

N

0 75 150

FEET

SOURCE: Google (2016)

I:\KSP1801\GIS\MXD\DesertTortoise_BurrowingOwl\DT_SurveyArea.mxd (7/27/2018)

FIGURE 2

Hesperia Kaiser Permanente Medical Office Building

Desert Tortoise Survey Area

1. View of general habitat conditions.

2. View of general habitat conditions.

3. View of general habitat conditions.

4. View of general habitat conditions.

LSA

FIGURE 3

Hesperia Kaiser Permanente Medical Building

Site Photographs

I:\KSP1801\G\Photos_Desert_Tortoise.cdr (7/27/2018)

USFWS DESERT TORTOISE PRE-PROJECT SURVEY DATA SHEET

Please submit completed copies of all datasheets and a shapefile of the sampled area to the action agency and local USFWS office within 30-days of survey completion

Date of survey: 3 May 2018 (day, month, year) Survey biologist(s): Denise Woodard / denise.woodard@LSH.NET (name, email, and phone number)

Site description: 10 Acres / Joshua Tree Woodland - Disturbed (project name and size; general location)

County: San Bernardino Quad: Hesperia Location: 465711.63mE / 3809252.43mN (UTM coordinates, lat-long, and/or TRS; map datum)

Circle one: 100% coverage or Sampling Area size to be surveyed: 10 acres Transect #: 1-15 Transect length: 2958' each

GPS Start-point: 465712.94mE / 3809236.63mN (easting, northing, elevation in meters) Start time: 9:20 am/pm

GPS End-point: 465719.49mE / 3809132mN (easting, northing, elevation in meters) End time: 11:45 am/pm

Start Temp: 17 °C End Temp: 18 °C

Live Tortoises [None Found]

Detection number	GPS location Easting	Northing	Time	Tortoise location (*in burrow*: all of tortoise beneath plane of burrow opening, or *not in burrow*)	Approx MCL ≥180 mm? (*Yes, No or Unknown*)	Existing tag # and color, if present
1						
2						
3						
4						
5						
6						
7						
8						

Tortoise Sign (burrows, scats, carcasses, etc) [None Found]

Detection number	GPS location Easting	Northing	Type of sign (*burrows, scats, carcass, etc*)	Description and comments
1				
2				
3				
4				
5				
6				
7				
8				

Version: August 31, 2017

Transect number: 1-15

Attachment D: Burrowing Owl Survey

CARLSBAD
FRESNO
IRVINE
LOS ANGELES
PALM SPRINGS
POINT RICHMOND
RIVERSIDE
ROSEVILLE
SAN LUIS OBISPO

August 13, 2018

Mr. Skyler Denniston, Senior Land Use Manager
National Facilities Services
Kaiser Permanente
393 East Walnut Street, Fourth Floor
Pasadena, California 91188

Subject: Kaiser Permanente Medical Office Project—Burrowing Owl Survey Results (LSA Project No. KSP1801)

Dear Mr. Denniston:

This letter serves to document the results of a survey for burrowing owl (*Athene cunicularia*) conducted on the above-referenced project site by LSA. The project site encompasses approximately 10 acres. Geographically, the project site is in the northeast quarter of Section 23, Township 4 North, Range 5 West, as shown on the *Hesperia*, *California* United States Geological Survey (USGS) 7.5-minute quadrangle (Figure 1; all figures attached).

SURVEY AREA

The project site or survey area (Figure 2) is relatively flat site, at an elevation of approximately 3,500 feet. The soil within the survey area, as mapped by the *Natural Resource Conservation District Soil Data Mart SSURGO metadata and GIS maps,* http://soildatamart.nrcs.usda.gov/ (2006), is Hesperia loamy fine sand, 2 to 5 percent slopes. The dominant plant community on site is best described as Joshua woodland. Dominant plant species identified in this community include Joshua tree (*Yucca brevifolia*), California juniper (*Juniperus californica*), and Nevada jointfir (*Ephedra nevadensis*). The project site is bordered by commercial development on the north, by Escondido Avenue and commercial development on the east, and by undeveloped land to the south and west.

BACKGROUND

Burrowing owls are found in open, dry grasslands; agricultural and range lands; desert habitats; and grass, forb, and shrub stages of pinyon and ponderosa pine habitats. They nest in abandoned burrows of ground squirrels or other animals, in pipes, rock and debris piles, and in other similar features.

Burrowing owls and their nests and eggs are protected from “take” (meaning destruction, pursuit, possession, etc.) under the Migratory Bird Treaty Act (MBTA) of 1918 and under Sections 3503, 3503.5, and 3800 of the California Fish and Game Code. Activities that cause destruction of active nests, or that cause nest abandonment and subsequent death of eggs or young, may constitute violations of one or both of these laws.

1500 Iowa Avenue, Suite 200, Riverside, California 92507 951.781.9310 www.lsa.net

LSA is a business name of LSA Associates, Inc.

METHODS

The burrowing owl survey, including a habitat assessment, was conducted according to the *Staff Report on Burrowing Owl Mitigation, State of California Natural Resource Agency, Department of Fish and Game, May 7, 2012.* The survey protocol requires four field visits, the first between February 15 and April 15, and three visits between April 15 and July 15. Due to the timing of project start up, the first field visit was not able to be conducted.

The survey was conducted by LSA biologist Denise Woodard by walking transects spaced from 30 to 50 feet wide, and stopping periodically to search for owls with the use of binoculars. Potential habitat outside the survey area and within 500 feet of the project alignment was scanned with binoculars as feasible. Potential burrows, such as fossorial mammal burrows, as well as other manmade structures (e.g., earthen berms, concrete culverts, concrete, asphalt, rock, or wood debris piles, or openings beneath concrete or asphalt pavement) were examined for owl sign (e.g., feathers, pellets, whitewash, and prey remnants). Table A provides the survey data for each survey visit.

Table A: Burrowing Owl Survey Dates, Times, and Weather Conditions

Field Visit	Date (2018)	Time (24–Hour)	Weather Conditions		
			Temperature (°F)	Wind (mph)	Cloud Cover (%)
Habitat Assessment and Survey 1	May 3	0920–11:45	63–64	10–15	70
Survey 2	June 22	0630–0840	64–70	1–3	40
Survey 3	July 14	0600–0815	72–77	3–5	0

RESULTS

The Joshua woodland habitat within the survey area and adjacent undeveloped open space areas provides potentially suitable habitat for the burrowing owl. The habitats on site have been affected by off highway vehicle (OHV) use, homeless encampments, and trash dumping. A domestic dog, a potential predator of the burrowing owl, was observed during the July 14 survey. California ground squirrel (*Spermophilus beecheyi*) burrows and other potential burrow habitat features (debris piles) were found scattered throughout the survey area. Site photographs are provided as Figure 3.

Bird species observed during the survey are ash-throated flycatcher (*Myiarchus cinerascens*), common raven (*Corvus corax*), mainland cactus wren (*Campylorhynchus brunneicapillus anthonyi*), Say's phoebe (*Sayornis saya*), California horned lark (*Eremophila alpestris actia*), house sparrow (*Passer domesticus*), and house finch (*Haemorhous mexicanus*).

No burrowing owl, sign, burrows, or other burrow features potentially occupied by burrowing owl were detected during the survey period. Therefore, the burrowing owl is considered absent from the project site at this time.

Please contact me by phone at (951) 781-9310 or by email at denise.woodard@lsa.net with any questions you may have regarding this survey.

Sincerely,

LSA ASSOCIATES, INC.

Denise Woodard
Associate/Senior Biologist

Attachments: Figure 1: Regional and Project Location
Figure 2: Burrowing Owl Survey Area
Figure 3: Site Photographs

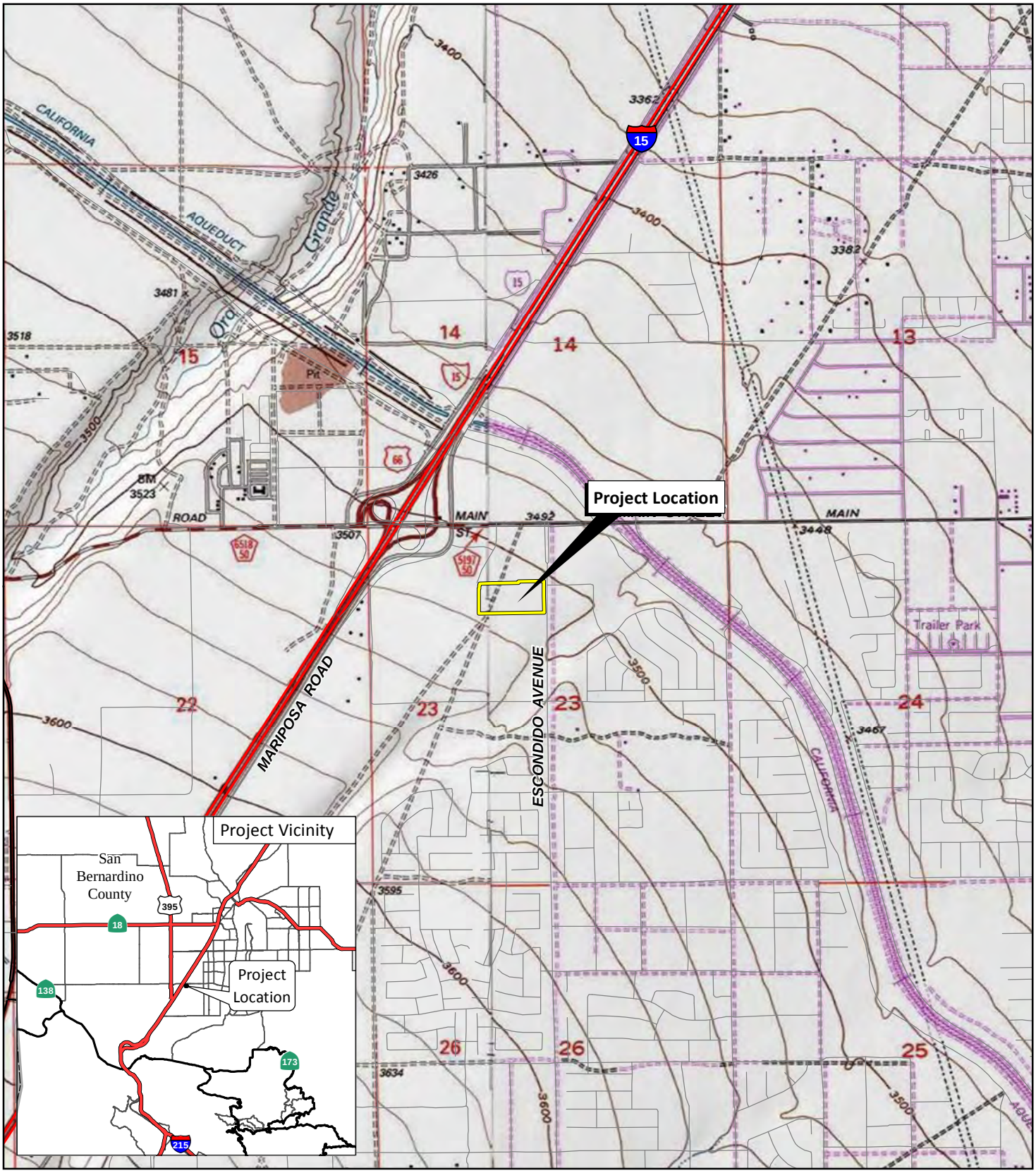

LSA

FIGURE 1

0 1000 2000
FEET

Hesperia Kaiser Permanente Medical Office Building

Regional and Project Location

SOURCE: USGS 7.5' Quads: Hesperia, 1980, Baldy Mesa, 1988, CA; ESRI Streetmap, 2013.

I:\KSP1801\Reports\Cultural\fig1_RegLoc.mxd (6/26/2018)

LSA

LEGEND

Survey Area

Photograph Locations

N

0 75 150

FEET

SOURCE: Google (2016)

I:\KSP1801\GIS\MXD\DesertTortoise_BurrowingOwl\BUOW_SurveyArea.mxd (7/27/2018)

FIGURE 2

Hesperia Kaiser Permanente Medical Office Building

Burrowing Owl Survey Area

1. View of general habitat conditions.

2. View of general habitat conditions.

3. View of general habitat conditions.

4. View of general habitat conditions.

LSA

FIGURE 3

Hesperia Kaiser Permanente Medical Building

Site Photographs

5. View of typical typical ground squirrel burrows observed.

LSA

FIGURE 3

Hesperia Kaiser Permanente Medical Building

Site Photographs

Attachment E: CDFW Mohave Ground Squirrel Correspondence

CARLSBAD
FRESNO
IRVINE
LOS ANGELES
PALM SPRINGS
POINT RICHMOND
RIVERSIDE
ROSEVILLE
SAN LUIS OBISPO

August 14, 2018

Scott Osborn
Nongame Wildlife Program
California Department of Fish and Wildlife
1812 Ninth Street
Sacramento, CA 95811

Esther Burkett
Nongame Wildlife Program
California Department of Fish and Wildlife
1812 Ninth Street
Sacramento, CA 95811

Subject: Kaiser Permanente Medical Office Project—Request for Concurrence

Dear Dr. Osborn and Ms. Burkett:

The purpose of this letter is to request concurrence from the California Department of Fish and Wildlife (CDFW) that Mohave ground squirrel (*Xerospermophilus mohavensis*) (MGS) trapping would not be required for the approximately 10-acre Kaiser Permanente Medical Office Project located in Hesperia, California, due to the site being isolated from the species' current range (Figure 1, attached).

Project Background

Geographically, the project site is in the northeast quarter of Section 23, Township 4 North, Range 5 West, as shown on the *Hesperia*, *California* United States Geological Survey (USGS) 7.5-minute quadrangle. The project site is bordered on the north by commercial development, to the east by Escondido Avenue, and to the south and west by vacant, undeveloped land. The elevation of the relatively flat site is approximately 3,500 feet. The soils present on site consist of sand and loamy fine sand. The dominant plant communities on site are salt bush scrub and Joshua tree juniper woodland. Dominant species identified in this community include annual bur-sage (*Ambrosia acanthicarpa*), bladder sage (*Salazaria mexicana*), Joshua tree (*Yucca brevifolia*), and California juniper (*Juniperus californica*).

The project site is in a highly developed area that is cut off from known MGS populations by Interstate 15 (I-15) to the west and by the California Aqueduct to the east. The nearest known MGS population is a remnant population in Adelanto, which is more than 10 miles to the north. The property to the adjoining north of the site consists of a retail parking lot and vacant, graded land. Escondido Avenue abuts the site to the east, with vacant, graded land with a gravel cover and a Walmart farther east (13401 Main Street). Although the properties to the adjoining south and west of the site consist of vacant, undeveloped land, these parcels are heavily disturbed and scattered with miscellaneous household trash throughout.

Previous Mohave Ground Squirrel Surveys Conducted in the Project Area

Numerous MGS protocol trapping surveys have been conducted throughout the Victor Valley with only one capture documented more than 10 miles north of the project site near the City of Adelanto. Additionally, in 2010 while LSA was conducting a second year of MGS protocol trapping on an adjacent parcel (developed as a Walmart shopping center) to the east of the project site, the

traps were vandalized, with 45 of the traps smashed by vandals. After reporting the incident to CDFW, LSA was directed by CDFW to suspend the trapping and that no additional trapping would be required since the development of the site is not likely to result in “take” of the species.

On behalf of Kaiser Permanente, LSA respectfully requests concurrence from CDFW that MGS protocol trapping is not required and that development of the site is not likely to result in “take” of the species.

If you need additional information or would like to discuss the contents of this letter, I may be contacted at leo.simone@lsa.net or at (949) 553-0666.

Sincerely,

LSA Associates, Inc.

Leo Simone
Associate, Biologist

Attachment: Figure 1: Mohave Ground Squirrel Trapping Locations

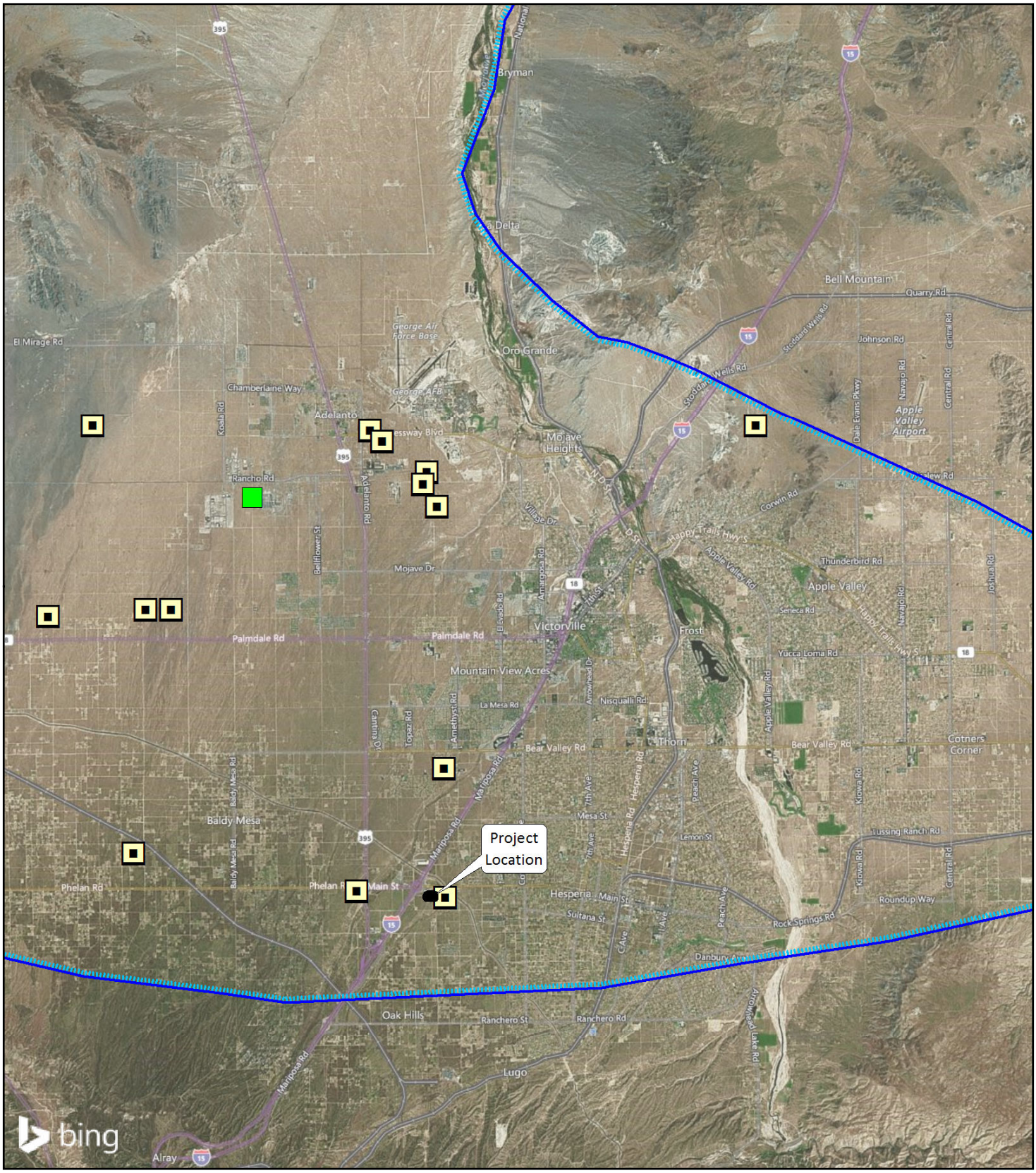

LSA

FIGURE 1

LEGEND

Project Location

Historic Mojave Ground Squirrel Range

Protocol Grids

Present

Not Detected

N

0 1.5 3
Miles

SOURCE: Bing Maps (2/2015)

Hesperia Kaiser Permanente Medical Office Building

Mojave Ground Squirrel Trapping Locations

I:\KSP1801\GIS\MXD\MojaveGroundSquirrel.mxd (8/14/2018)

Attachment F: Joshua Tree Relocation Plan

CARLSBAD
FRESNO
IRVINE
LOS ANGELES
PALM SPRINGS
POINT RICHMOND
RIVERSIDE
ROSEVILLE
SAN LUIS OBISPO

July 10, 2018

Skyler Denniston, Senior Land Use Manager
National Facilities Services
Kaiser Permanente
393 East Walnut Street, Fourth Floor
Pasadena, CA 91188

Subject: Kaiser Permanente Medical Office Project—Joshua Tree Relocation Plan

Dear Mr. Denniston:

This Joshua Tree Relocation Plan (Plan) serves to document the results of the protected desert native plant survey effort for Joshua trees (*Yucca brevifolia*) conducted on the above-referenced project site by LSA. The survey effort was completed on June 28, 2018. This Plan was prepared in accordance with Chapter 16.24 of the City of Hesperia (City) Municipal Code. The Plan includes the proposed treatment of Joshua trees (e.g., transplant or destroy) and the long-term maintenance and monitoring protocol.

The project site encompasses approximately 10 acres. Geographically, the project site is in the northeast quarter of Section 23, Township 4 North, Range 5 West, as shown on the *Hesperia*, *California* United States Geological Survey (USGS) 7.5-minute quadrangle (Figure 1; all figures attached). The elevation of the relatively flat site is approximately 3,500 feet. The soils present on site consist of sand and loamy fine sand. The dominant plant communities on site are salt bush scrub and Joshua tree juniper woodland. Dominant species identified in this community include annual bur-sage (*Ambrosia acanthicarpa*), bladder sage (*Salazaria mexicana*), Joshua tree, and California juniper (*Juniperus californica*). The project site is bordered on the north by commercial development, to the east by Escondido Avenue, and vacant, undeveloped land to the south and to the west.

BACKGROUND

This Plan for the Kaiser Permanente Medical Office Project is required under Chapter 16.24 of the City's Municipal Code in order to help mitigate impacts to Joshua trees and other desert plants resulting from development within the city limits. LSA associate biologist/International Society of Arboriculture (ISA) certified arborist Leo Simone prepared the Plan based on the requirements of the City Municipal Code and the results of a protected desert native plant survey LSA conducted for the site on June 28, 2018.

The Plan provides site preparation guidelines, Joshua tree transplantation procedures, maintenance requirements, and an explanation of the Joshua tree adoption program. Joshua tree transplantation operations are to take place in two phases: Phase 1 involves the excavation and the transplantation of Joshua trees from their original on-site location to a temporary on-site stockpile area; and

Phase 2 will be the permanent transplantation of the Joshua trees from the stockpile area to either designated on-site planting areas or placement in a Joshua tree adoption program.

The City requires that a "Special Inspector" be present during all Joshua tree transplantation activities and monitoring. The Special Inspector shall be an ISA-certified arborist or registered botanist qualified to assess the success of the transplantation effort and to recommend corrective measures, if needed.

The Plan requires that progress reports be prepared and submitted to the City following the completion of each phase of the Joshua tree transplantation effort. A "Final Native Desert Plants Report" summarizing the results of the transplantation activities must also be prepared and submitted to the City after all Joshua tree transplantation activities are completed. This Plan documents the total number of Joshua trees surveyed and a suitability rating of each Joshua tree suitable for transplantation (see Attachment A).

METHODS

LSA associate biologist Leo Simone (ISA Certified Arborist/Tree Risk Assessor WE-8491A) conducted the survey on June 28, 2018, with assistance from LSA assistant biologist Heather Monteleone. The proposed project site was surveyed on foot by walking 50 foot (ft) wide (approximate) belt transects. Joshua trees were judged as transplantable or nontransplantable based on a variety of attributes. Joshua trees were considered unsuitable for transplantation if the following applied:

- Infested by borers and/or beetles
- An immature sapling (less than 4 ft tall)
- Overcircumference (trunk circumference greater than 40 inches at 1 ft above the ground)
- Overtall (greater than 15 ft)
- Overbalanced (tree leaning severely or limbs all on one side)
- Incompatible with the spade (corm area greater than 3 square feet)
- Overmature (limbs drooping or fallen to the ground)
- Standing dead
- A dependent clone (a nontransplantable clone less than 4 ft tall and more than 3 ft from the parent tree)
- Down live (on the ground, yet still living)

All Joshua trees observed were inventoried using a global positioning system (GPS) unit and assigned a number. An aluminum tree tag was secured to each Joshua tree. Joshua trees determined to be suitable to transplant were flagged with blue flagging; Joshua trees determined to be nontransplantable were flagged with red flagging.

The survey was conducted between 7:30 a.m. and 11:00 a.m. Weather during the survey period was generally mild, with clear skies and light winds. Attachment A presents the results of the Joshua tree

survey, including individual tree attributes. Figure 2 illustrates these results on an aerial photograph: Joshua trees shown in blue are suitable for transplantation; Joshua trees shown as red are not suitable for transplanting.

Attachment B provides photographs of each of the Joshua trees surveyed, along with their identification numbers and suitability ratings.

RESULTS

A total of 39 Joshua trees were inventoried on the proposed project site. Of those Joshua trees, 19 are suitable for transplant and salvage efforts. The 20 Joshua trees that were judged unsuitable for transplant or salvage were deemed so due to having one or more negative attributes described in the Methods section above and as shown on the Joshua Tree Attributes and Survey Results in Attachment A.

Of the surveyed Joshua trees, 11 were given a qualitative transplantation suitability rating of good, 8 were given a fair transplantation suitability rating, and 20 Joshua trees given a qualitative transplantation suitability rating of poor.

Attachment A lists the Joshua tree attributes that were used to evaluate a tree for transplanting and presents the results of the survey, including the identification number of the tree and the Joshua trees suitable or not suitable for transplanting. If the Joshua tree was determined to be not suitable for transplanting, then an attribute for that determination is also shown.

TRANSPLANTATION METHODS

The optimal time of year for Joshua tree transplantation is in the cool season (i.e., fall or spring); excessive cold or heat may hinder transplantation success. A qualified Transplantation Contractor with a successful track record of Joshua tree transplantation shall use a large tree spade truck to transplant the Joshua trees.

Joshua trees that will be transplanted shall be prewatered 24 hours in advance of their removal. Slowly soaking the area around the Joshua tree softens the soil around the root ball and lubricates the area, making it easier for the tree spade to reach full depth with minimal disturbance to the root ball, thus maximizing the root and soil material that is harvested intact. The more root mass and soil that is harvested intact, the higher the likelihood of a successful transplantation. The receiver hole shall be excavated with the tree spade prior to extraction of the transplant Joshua tree, and the receiver hole shall be thoroughly irrigated. Where practicable, the Joshua tree shall be placed in the receiver hole at the same north-south orientation as it was in its original location to minimize sunscald. After placement in the new location, the soil around the Joshua tree shall be tamped to eliminate air spaces, and a 2- to 3-inch-high, hand-compacted earthen ring shall be formed just outside the circumference of the planting hole to form a watering basin. The Joshua tree will then be thoroughly deep-watered. At no time shall excavation or receiver holes remain uncovered overnight.

Following the initial watering at the time of transplantation, the Joshua trees should be deep-watered by laying the hose within the watering basin and running the water at a slow trickle for

several hours. Larger Joshua trees need deeper, but less frequent, watering events than smaller Joshua trees. For example, full-size Joshua trees should be watered with 30–50 gallons over several hours. Irrigation of smaller Joshua trees should be reduced accordingly; a group of smaller Joshua trees may only require 20 gallons of water over a 2-hour period. The Transplantation Contractor should take care to avoid oversaturation of the soil when watering the Joshua trees as this may cause the Joshua trees to topple or may cause root rot. The soil surrounding the Joshua trees should be allowed to dry out between watering events.

Following these guidelines does not guarantee that the Joshua trees will survive. General observations should be made regarding the establishment of the Joshua trees. Common sense and landscaping experience are valuable tools and should not be ignored. If the Joshua trees appear to be stressed (either too much or too little water), the watering regime should be adjusted. Signs of disease or structural changes (e.g., leaning or sagging) should be noted. The Joshua trees will be assessed by LSA or another Special Inspector selected by the City on a periodic basis; further guidance or remedial measures may be suggested at that time. Staff conducting the irrigation activities will be on site more frequently and may be able to make important observations regarding tree health.

MAINTENANCE

The Transplantation Contractor is responsible for the maintenance of the transplanted Joshua trees, in accordance with the following guidelines. Normal maintenance will include irrigation, weeding, and herbivore control. The Joshua trees must be maintained regularly to ensure successful survival of the transplanted Joshua trees. The transplant site(s) shall be kept neat, clean, and free of all nonvegetative debris and trash and vegetative debris accumulated during weeding activities.

Irrigation

The following guidelines for irrigation frequency should be followed (with allowances made for natural rainfall):

- First 6 Months
  - Large Joshua trees: Once every 2 weeks in the winter, and once per week in the summer.
  - Small Joshua trees: Once per week in the winter, and twice per week in the summer.
  - During winter: Simulate rainfall during watering events by showering the Joshua trees from above for several minutes. Do not directly or forcefully spray the Joshua tree. This may not be necessary in normal rainfall years.
- Remainder of Maintenance Period
  - Large Joshua trees: Once per month in the winter, and once every 2 weeks in the summer.
  - Small Joshua trees: Once every 2 weeks in the winter, and once per week in the summer.
  - During winter: Simulate rainfall during watering events by showering the Joshua trees from above for several minutes. Do not directly or forcefully spray the Joshua tree. This may not be necessary in normal rainfall years.

Weed Control

To ensure survival of the transplanted Joshua trees, the Transplantation Contractor shall remove nonnative weeds to reduce the amount of competition for natural resources, including water, nutrients, and sunlight. The amount of weeding required will be determined by the amount of weed seed in the soil, weather conditions, and the Transplantation Contractor's diligence in removing the weeds, thereby reducing the weed seed bank.

All weeds present shall be removed manually; no herbicide shall be permitted without express written authorization from the Special Inspector. No weed whipping or string-line trimmers shall be permitted within the Joshua tree transplanted area(s) without express written authorization from the Special Inspector. Special care must be taken to prevent damage to transplanted Joshua trees and other native plants.

Pest Control

The Transplantation Contractor shall use only those methods approved by the Special Inspector. The Transplantation Contractor shall implement control measures, which may require fencing of the site at the earliest sign of damage. In addition, the Restoration Contractor shall treat any insect infestation as necessary to protect the health and establishment of the transplanted Joshua trees, per the recommendation of the Special Inspector.

Fertilizer

The Transplantation Contractor shall not use chemical fertilizer on the Joshua trees during transplantation or stockpiling, unless directed by the Special Inspector.

MONITORING

To ensure that the transplanted Joshua trees are kept in compliance with this Plan, the transplanted Joshua trees will be evaluated quarterly prior to final landscape planting. A "Special Inspector" is required to be present during all Joshua tree transplantation activities and monitoring. The Special Inspector shall be an ISA-certified arborist or registered botanist qualified to assess the progress and success of the transplantation effort and to recommend corrective measures, if needed.

The monitoring shall be as follows:

- Monitoring for survival, appearance, and function of all transplanted Joshua trees will be completed quarterly. General compliance with this Plan will also be monitored.
- As part of the quarterly inspections, the Special Inspector will make note of the general health of the transplanted Joshua trees, and will make maintenance recommendations, if necessary.

JOSHUA TREE ADOPTION PROGRAM

The City requires that healthy, transplantable Joshua trees not relocated on site be placed into an adoption program. This portion of the Plan describes the procedures the City requires to establish an adoption program for the healthy, transplantable Joshua trees not used on site. The developer must submit a letter on company letterhead to the City describing the adoption program and the

community notification process. The program requirements, which must be described in the letter to the City, are as follows:

- The public notification process shall occur for a minimum of 3 weeks and may include notification via publications in local newspapers, radio advertisements, hand-distributed fliers, and similar notification techniques.
- The public notices shall identify the location where the Joshua trees may be viewed and the period of time during which the Joshua trees are available for adoption. The Joshua trees shall be made available for adoption for a minimum of two weeks, including weekends.
- The public notices shall provide the contact information, including an on-site or cellular phone number, for the person who will be available on site to assist with the Joshua tree adoption process. This person shall be responsible for locating the specific Joshua trees that will be removed and are thus available for adoption.
- Each adopter shall be provided with a copy of the City Joshua Tree Transplanting Guidelines.
- A log shall be submitted to the City that includes the name, address, and phone number of each participant in the adoption program, and the number of Joshua trees they have received.
- If fewer than 50 percent of the healthy, transplantable Joshua trees are adopted, the developer shall purchase the remaining adoptable Joshua trees (up to 50 percent of the total) at $350 per Joshua tree and recycle them at Advance Disposal.

Please contact me if you have any questions about this survey.

Sincerely,
LSA Associates, Inc.

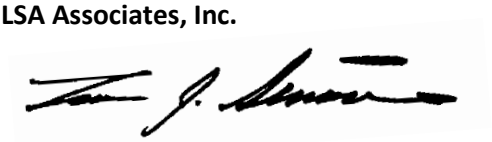

Leo Simone
Associate Biologist
ISA Certified Arborist WE-8491A

Attachments: Figure 1: Project Location Map
Figure 2: Aerial Photograph of Joshua Tree Survey Results
Attachment A: Joshua Tree Attributes and Survey Results
Attachment B: Photographs with Attributes of Stockpiled Joshua Trees

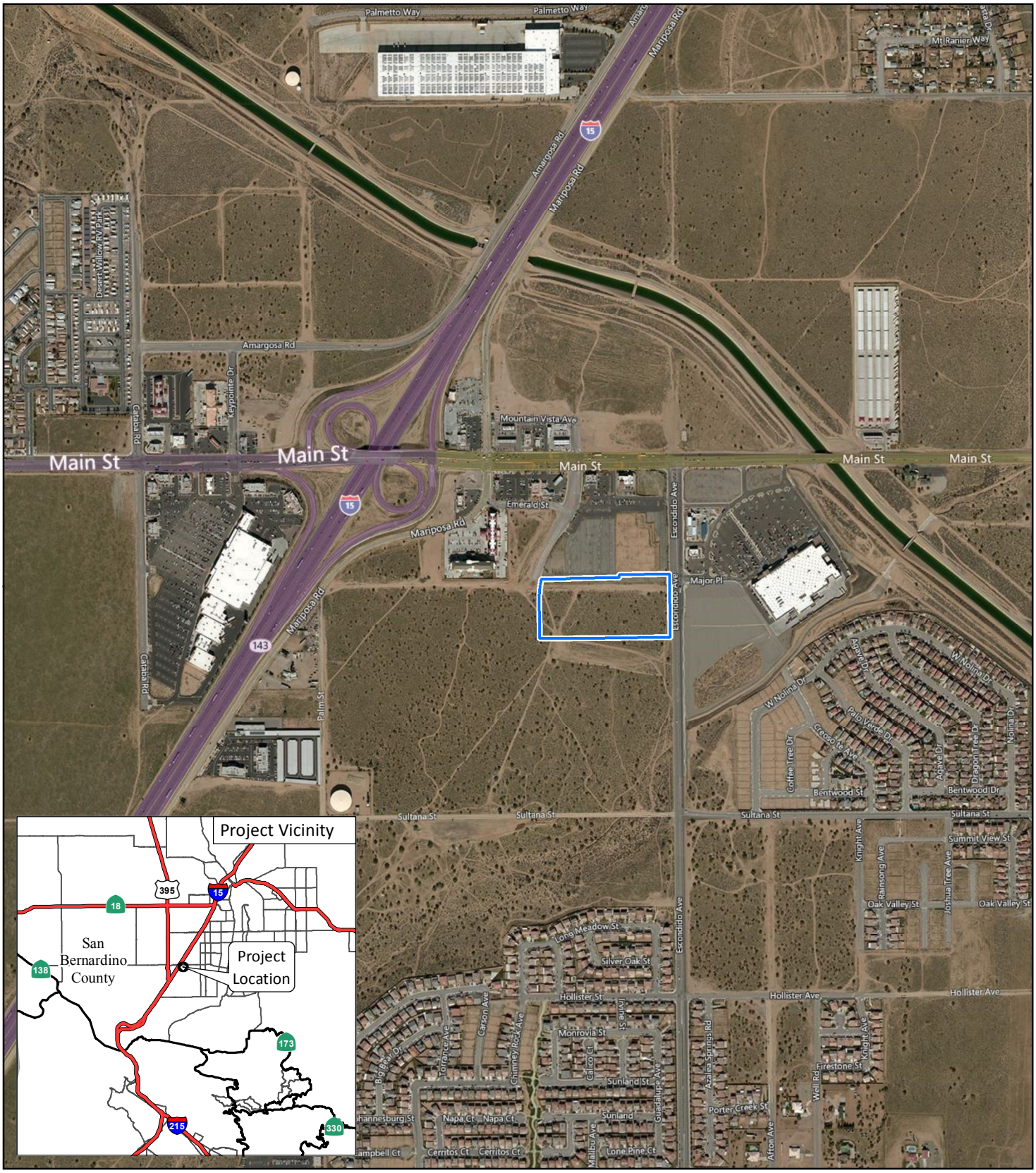

LSA

LEGEND

Project Location

FIGURE 1

0 500 1000
FEET

SOURCE: Bing Maps (2/2015)

I:\KSP1801\GIS\MXD\RegLoc.mxd (7/9/2018)

Kaiser Permanente Medical Office Project

Project Location

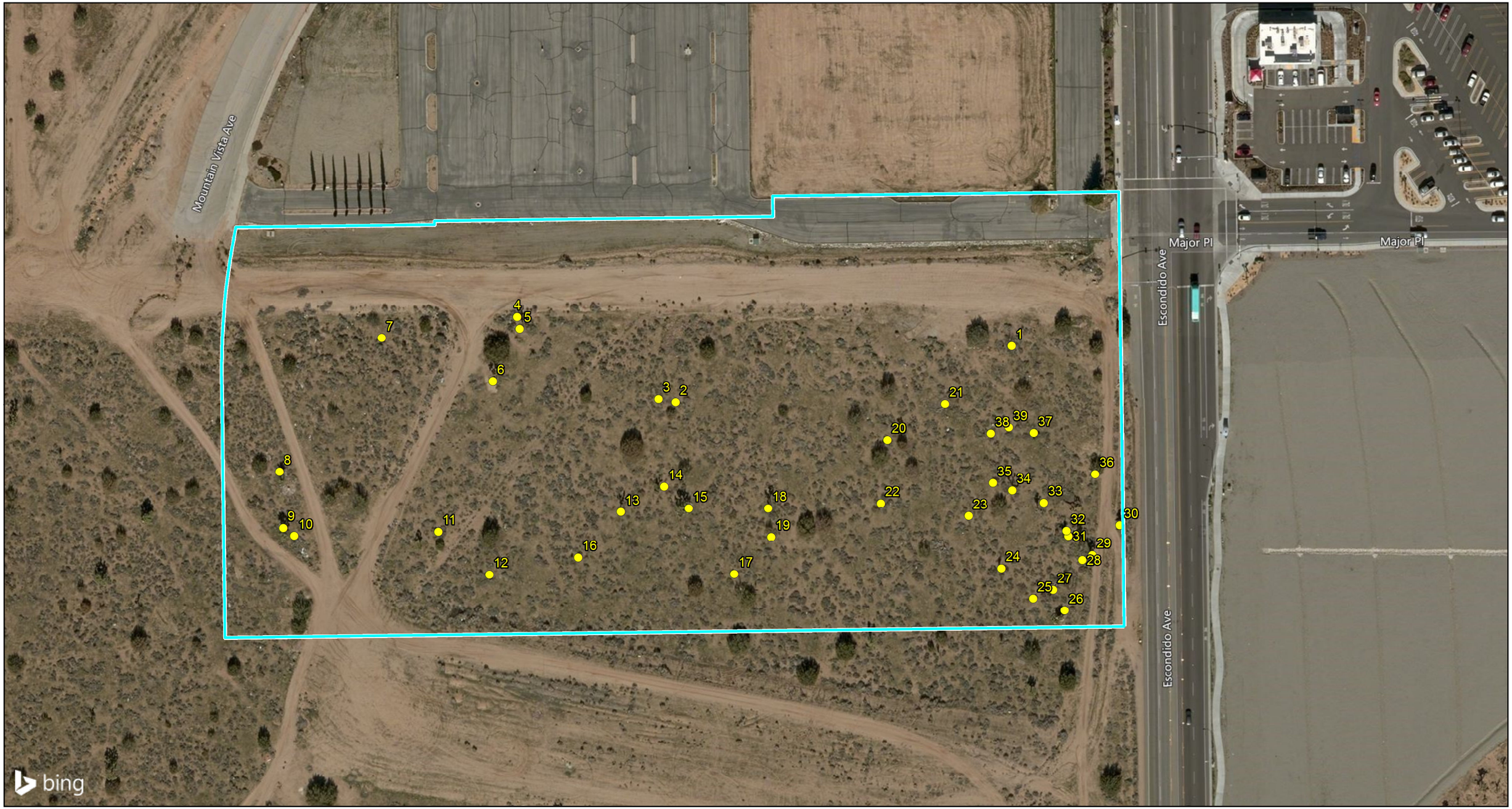

LSA

LEGEND

Project Location

Joshua Tree Location (with ID)

0 50 100
FEET

SOURCE: Bing Maps (2/2015); LSA (6/2018)

I:\KSP1801\GIS\MXD\JTreeSurvey.mxd (7/9/2018)

FIGURE 2

Kaiser Permanente Medical Office Project

Joshua Tree Survey

ATTACHMENT A

JOSHUA TREE ATTRIBUTES AND SURVEY RESULTS

JOSHUA TREE ATTRIBUTES AND SURVEY RESULTS

ID No.	Transplant	B	L	DC	OB	DL	OC	DS	OM	I	OT	IS	Remarks
1	Yes												5 ft; Good
2	Yes									X			3 ft; Fair
3	No									X			2 ft; Poor; immature sapling
4	No	X									X		20 ft; Poor; significant beetle damage
5	No									X			2 ft; Poor; immature sapling
6	No	X											18 ft; Poor; beetle damage severe decay
7	Yes												3 ft; Good
8	Yes	X											18 ft; Fair; minor beetle damage
9	No	X					X		X		X		25 ft; Poor; significant beetle damage
10	No	X											17 ft; Poor; severe decay at base of trunk
11	Yes												7 ft; Fair; minor branch damage
12	Yes												5 ft; Good
13	No	X									X		20 ft; Poor; severe decay beetle damage
14	No	X											17 ft; Poor; severe decay dead branches
15	No	X					X		X		X	X	20 ft: Poor; severe decay corvid nest
16	Yes												6 ft; Fair
17	No									X			2 ft; Poor; immature sapling
18	No	X							X			X	25 ft; Poor; beetle damage trunk decay
19	Yes												4 ft; Good
20	Yes												5 ft; Fair
21	No									X			2 ft; Poor; immature sapling
22	Yes												4 ft; Good
23	No									X			2 ft; Poor; immature sapling
24	Yes												10 ft; Good
25	No									X			2 ft; Poor; immature sapling
26	No					X						X	20 ft; Poor; severe decay at tree base
27	Yes												4 ft; Good; multi-trunk
28	No	X			X		X		X				25 ft; Poor; unbalanced crown
29	Yes												20 ft; Good; slight lean
30	Yes												15 ft; Fair
31	Yes												15 ft; Fair; minor beetle damage
32	No									X			2 ft; Poor; immature sapling
33	No							X					10 ft; Poor; dead with bee hive
34	No	X	X		X								18 ft; Poor; decay unbalanced crown
35	Yes												4 ft; Fair
36	Yes												5 ft; Good
37	No					X							10 ft; Poor; broken trunk severe decay
38	Yes												4 ft; Good
39	Yes												4 ft; Good

Key to Attributes:

B = Beetles
DC = Dependent Clone
DL = Down Live
DS = Dead Standing
I = Immature
IS = Incompatible with Spade
L = Limbs Lower than 8 feet
OB = Overbalanced
OC = Overcircumference
OM = Overmature
OT = Overtall (>15 feet)

ATTACHMENT B

PHOTOGRAPHS WITH ATTRIBUTES OF STOCKPILED JOSHUA TREES

Photograph 1: Good- 5 ft straight single trunk.

Photograph 2: Fair- 3 ft straight single trunk.

Photograph 3: Poor – 2 ft, immature sapling.

Photograph 4: Poor – 20 ft straight trunk, beetles.

Photograph 5: Poor – 2 ft, immature sapling.

Photograph 6: Poor – 18 ft, decay at base of trunk, beetles.

Photograph 7: Good – 3 ft single trunk.

Photograph 8: Fair – 18 ft, minor beetle bore at base of trunk.

Photograph 9: Poor – 25 ft, overcircumference, beetles.

Photograph 10: Poor – 17 ft, decay at base of trunk.

Photograph 11: Fair – 7 ft, broken off of dead parent.

Photograph 12: Good – 5 ft single trunk.

Photograph 13: Poor – 20 ft, borers at base.

Photograph 14: Poor – 17 ft, dead branches, decay at base, beetles.

Photograph 15: Poor – 20 ft, corvid nest, beetles.

Photograph 16: Fair – 6 ft.

Photograph 17: Poor - 2 ft, immature sapling.

Photograph 18: Poor – 25 ft, beetle damage trunk decay.

Photograph 19: Good – 4 ft.

Photograph 20: Fair – 5 ft

Photograph 21: Poor – 2 ft, immature sapling.

Photograph 22: Good – 4 ft.

Photograph 23: Poor – 2 ft, immature sapling.

Photograph 24: Good – 10 ft.

Photograph 25: Poor – 2 ft, immature sapling.

Photograph 26: Poor – 20 ft, severe decay at tree base, severe lean.

Photograph 27: Good – 4 ft, multi-trunk.

Photograph 28: Poor – 25 ft, unbalanced crown.

Photograph 29: Good – 20 ft, slight lean.

Photograph 30: Fair – 15 ft.

Photograph 31: Fair – 15 ft, minor beetle damage.

Photograph 32: Poor – 2 ft, immature sapling

Photograph 33: Poor – 10 ft, dead with beehive.

Photograph 34: Poor – 18 ft, decay and unbalanced crown.

Photograph 35: Fair – 4 ft.

Photograph 36: Good – 5 ft.

Photograph 37: Poor – 10 ft, broken trunk, severe decay.

Photograph 38: Good – 4 ft.

Photograph 39: Good – 4 ft.

CARLSBAD
FRESNO
IRVINE
LOS ANGELES
PALM SPRINGS
POINT RICHMOND
RIVERSIDE
ROSEVILLE
SAN LUIS OBISPO

August 13, 2018

Mr. Skyler Denniston, Senior Land Use Manager
National Facilities Services
Kaiser Permanente
393 East Walnut Street, Fourth Floor
Pasadena, California 91188

Subject: Kaiser Permanente Medical Office Project—Desert Tortoise Survey Results (LSA Project No. KSP1801)

Dear Mr. Denniston:

This letter serves to document the results of a survey for desert tortoise (*Gopherus agassizii*) conducted on the above-referenced project site by LSA. The project site encompasses approximately 10 acres. Geographically, the project site is in the northeast quarter of Section 23, Township 4 North, Range 5 West, as shown on the *Hesperia*, *California* United States Geological Survey (USGS) 7.5-minute quadrangle (Figure 1; all figures attached).

SURVEY AREA

The project site or survey area (Figure 2) is relatively flat, at an elevation of approximately 3,500 feet. The soil within the survey area, as mapped by the *Natural Resource Conservation District Soil Data Mart SSURGO metadata and GIS maps,* http://soildatamart.nrcs.usda.gov/ (2006), is Hesperia loamy fine sand, 2 to 5 percent slopes. The dominant plant community on site is best described as Joshua tree woodland. Dominant plant species identified in this community include Joshua tree (*Yucca brevifolia*), California juniper (*Juniperus californica*), and Nevada jointfir (*Ephedra nevadensis*). The project site is bordered by commercial development on the north, by Escondido Avenue and commercial development on the east, and by undeveloped land to the south and west.

BACKGROUND

The Mojave population of the desert tortoise was listed as a federally endangered species by emergency rule on August 4, 1989, and as a threatened species by final rule on April 2, 1990. The Mojave population includes all desert tortoises north and west of the Colorado River in California, southern Nevada, northwestern Arizona, and southwestern Utah. Federally designated critical habitat for the Mojave Desert population was finalized in February 1994, and includes portions of the Mojave and Colorado Deserts that contain "the primary constituent elements and focuses on areas that are essential to the species' recovery" (USFWS 1994). In 2017, the United States Fish and Wildlife Service (USFWS) revised the survey protocol for *Preparing for Any Action that May Occur With the Range of the Mojave Desert Tortoise (*Gopherus agassizii*)*. When present, desert tortoise may be detected by various signs, including burrows, tracks, scat, egg shell fragments, courtship rings, carcasses, or skeletal remains.

1500 Iowa Avenue, Suite 200, Riverside, California 92507 951.781.9310 www.lsa.net

LSA is a business name of LSA Associates, Inc.

Mojave desert tortoises primarily inhabit creosote bush scrub, saltbush scrub, and Joshua tree woodland dominated by creosote bush (*Larrea tridentata*), white bursage (*Ambrosia dumosa*), cactus, saltbush (*Atriplex* spp.), or Joshua tree, generally below approximately 5,000 feet in elevation. Although tortoises may occur in canyon bottoms and on rocky hillsides in California, they are most often found on level ground, especially adjacent to washes. Desert tortoises typically burrow in areas with firm soil and may remain in their burrows throughout the year when unfavorable conditions occur, such as prolonged drought. Burrows are typically found at the bases of shrubs, but may occur in the open. Desert tortoises use two types of burrows, "brumation burrows" and "pallet burrows." Brumation burrows, which may extend many feet below the ground, are used in summer aestivation (heat avoidance and decreased food availability) and winter hibernation (cold avoidance). Several "brumating" tortoises may be found in a single burrow. Pallet burrows are excavated to avoid temperature fluctuations. They are typically one to three feet deep and may not be long enough to conceal the tortoise.

Desert tortoises are most active in spring, early summer, and fall, when annual plants are most abundant. They are in a state of torpor or hibernation during the winter. Tortoises usually emerge in late February or early March and may be active during the summer if there are rains or when temperatures are moderate. They are herbivores and feed on a variety of plants, including annual plants and perennial grasses.

Threats to desert tortoise include loss or degradation of habitat by off-highway vehicles (OHVs), military training maneuvers, mineral extraction activities, grazing by livestock, agricultural and residential activities, and disease.

METHODS

The desert tortoise survey was conducted according to currently accepted survey protocol, *Preparing for Any Action that May Occur With the Range of the Mojave Desert Tortoise (*Gopherus agassizii*)* (USFWS, Version: August 31, 2017). The survey protocol was modified so as not to include areas outside the project site based on the lack of rights of access to survey adjoining properties.

The field survey was conducted on May 3, 2018, by LSA biologist Denise Woodard. The survey area was surveyed using belt transects spaced approximately 30 feet apart.

The survey was conducted between 9:20 a.m. and 11:45 a.m. The weather during the survey period was generally mild, with air temperatures ranging from 63 to 64 degrees Fahrenheit (17 to 18 degrees Celsius), partly cloudy skies (70 percent), and winds ranging from 10 to 15 miles per hour. A USFWS Desert Tortoise Pre-Project Survey Data Sheet (attached) was completed summarizing the results of the field survey.

RESULTS

The Joshua woodland habitat within the survey area and adjacent undeveloped open space areas provides potentially suitable habitat for the desert tortoise. The habitats on site have been affected by OHV use, homeless encampments, and trash dumping. Common raven (*Corvus corax*), a known predator of the desert tortoise, was observed during the survey. Site photographs are provided as Figure 3.

No desert tortoise or desert tortoise sign were observed within the survey area; therefore, the species is considered absent from the project site at this time. In addition, the survey area is not within designated critical habitat for this species or within any Desert Wildlife Management Areas proposed for the desert tortoise identified in the draft West Mojave Habitat Conservation Plan.

Please contact me by phone at (951) 781-9310 or by email at denise.woodard@lsa.net with any questions you may have regarding this survey.

Sincerely,

LSA ASSOCIATES, INC.

Denise Woodard
Associate/Senior Biologist

Cc: U.S. Fish and Wildlife Service, Palm Springs Fish and Wildlife Office

Attachments: Figure 1: Regional and Project Location
Figure 2: Desert Tortoise Survey Area
Figure 3: Site Photographs
Desert Tortoise Pre-Project Survey Data Sheet

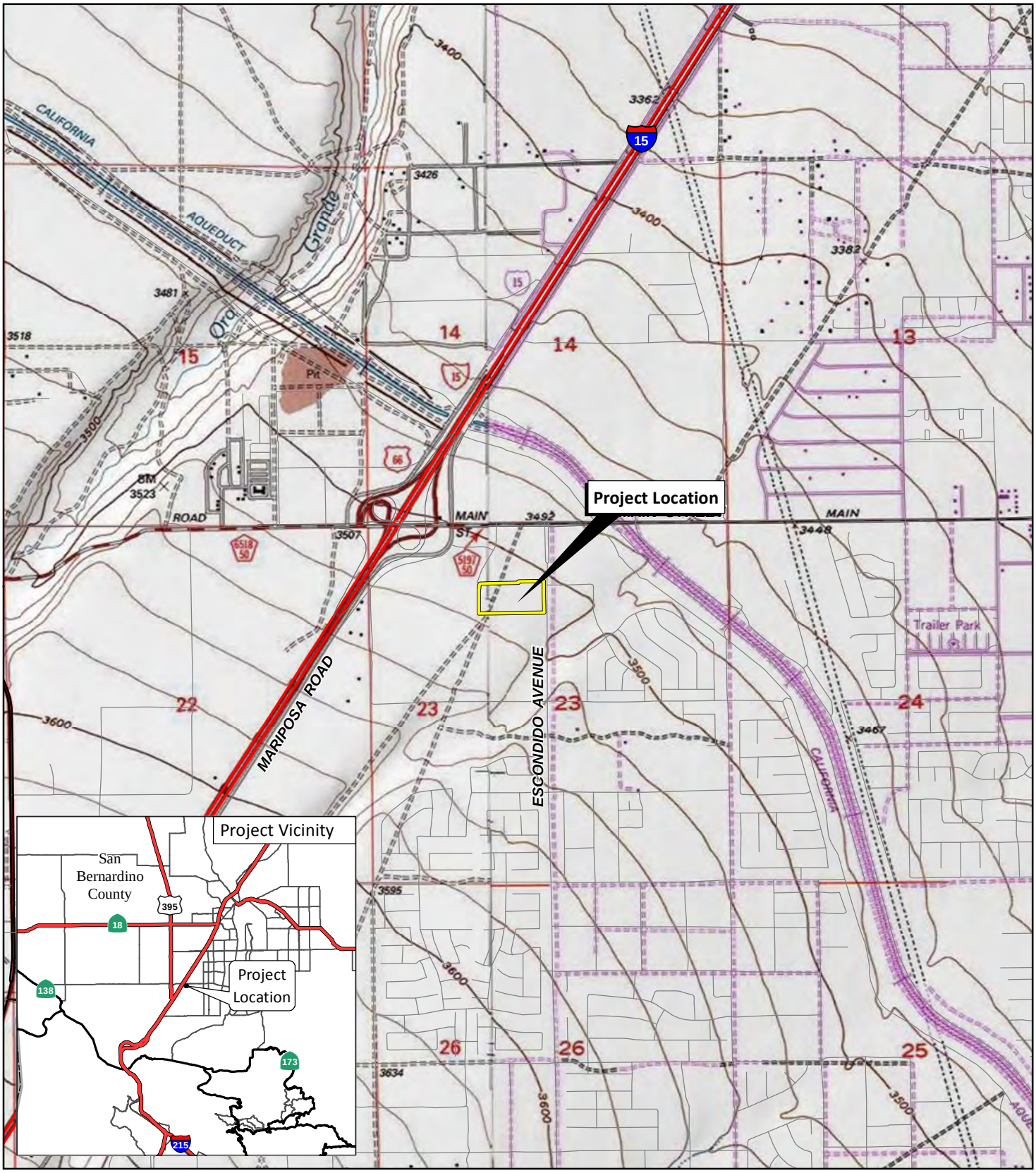

LSA

FIGURE 1

0 1000 2000
FEET

Hesperia Kaiser Permanente Medical Office Building

Regional and Project Location

SOURCE: USGS 7.5' Quads: Hesperia, 1980, Baldy Mesa, 1988, CA; ESRI Streetmap, 2013.

I:\KSP1801\Reports\Cultural\fig1_RegLoc.mxd (6/26/2018)

LSA

LEGEND

Survey Area

Photograph Locations

N

0 75 150

FEET

SOURCE: Google (2016)

I:\KSP1801\GIS\MXD\DesertTortoise_BurrowingOwl\DT_SurveyArea.mxd (7/27/2018)

FIGURE 2

Hesperia Kaiser Permanente Medical Office Building

Desert Tortoise Survey Area

1. View of general habitat conditions.

2. View of general habitat conditions.

3. View of general habitat conditions.

4. View of general habitat conditions.

LSA

FIGURE 3

Hesperia Kaiser Permanente Medical Building

Site Photographs

I:\KSP1801\G\Photos_Desert_Tortoise.cdr (7/27/2018)

USFWS DESERT TORTOISE PRE-PROJECT SURVEY DATA SHEET

Please submit completed copies of all datasheets and a shapefile of the sampled area to the action agency and local USFWS office within 30-days of survey completion

Date of survey: 3 May 2018 (day, month, year) Survey biologist(s): Denise Woodard / denise.woodard@LSH.NET (name, email, and phone number)

Site description: 10 Acres / Joshua Tree Woodland - Disturbed (project name and size; general location)

County: San Bernardino Quad: Hesperia Location: 465711.63mE / 3809252.43mN (UTM coordinates, lat-long, and/or TRS; map datum)

Circle one: 100% coverage or Sampling Area size to be surveyed: 10 acres Transect #: 1-15 Transect length: 2958' each

GPS Start-point: 465712.94mE / 3809236.63mN (easting, northing, elevation in meters) Start time: 9:20 am/pm

GPS End-point: 465719.49mE / 3809132mN (easting, northing, elevation in meters) End time: 11:45 am/pm

Start Temp: 17 °C End Temp: 18 °C

Live Tortoises [None Found]

Detection number	GPS location Easting	Northing	Time	Tortoise location (*in burrow*: all of tortoise beneath plane of burrow opening, or *not in burrow*)	Approx MCL ≥180 mm? (*Yes, No or Unknown*)	Existing tag # and color, if present
1						
2						
3						
4						
5						
6						
7						
8						

Tortoise Sign (burrows, scats, carcasses, etc) [None Found]

Detection number	GPS location Easting	Northing	Type of sign (*burrows, scats, carcass, etc*)	Description and comments
1				
2				
3				
4				
5				
6				
7				
8				

Version: August 31, 2017

Transect number: 1-15

CARLSBAD
FRESNO
IRVINE
LOS ANGELES
PALM SPRINGS
POINT RICHMOND
RIVERSIDE
ROSEVILLE
SAN LUIS OBISPO

August 13, 2018

Mr. Skyler Denniston, Senior Land Use Manager
National Facilities Services
Kaiser Permanente
393 East Walnut Street, Fourth Floor
Pasadena, California 91188

Subject: Kaiser Permanente Medical Office Project—Burrowing Owl Survey Results (LSA Project No. KSP1801)

Dear Mr. Denniston:

This letter serves to document the results of a survey for burrowing owl (*Athene cunicularia*) conducted on the above-referenced project site by LSA. The project site encompasses approximately 10 acres. Geographically, the project site is in the northeast quarter of Section 23, Township 4 North, Range 5 West, as shown on the *Hesperia*, *California* United States Geological Survey (USGS) 7.5-minute quadrangle (Figure 1; all figures attached).

SURVEY AREA

The project site or survey area (Figure 2) is relatively flat site, at an elevation of approximately 3,500 feet. The soil within the survey area, as mapped by the *Natural Resource Conservation District Soil Data Mart SSURGO metadata and GIS maps,* http://soildatamart.nrcs.usda.gov/ (2006), is Hesperia loamy fine sand, 2 to 5 percent slopes. The dominant plant community on site is best described as Joshua woodland. Dominant plant species identified in this community include Joshua tree (*Yucca brevifolia*), California juniper (*Juniperus californica*), and Nevada jointfir (*Ephedra nevadensis*). The project site is bordered by commercial development on the north, by Escondido Avenue and commercial development on the east, and by undeveloped land to the south and west.

BACKGROUND

Burrowing owls are found in open, dry grasslands; agricultural and range lands; desert habitats; and grass, forb, and shrub stages of pinyon and ponderosa pine habitats. They nest in abandoned burrows of ground squirrels or other animals, in pipes, rock and debris piles, and in other similar features.

Burrowing owls and their nests and eggs are protected from “take” (meaning destruction, pursuit, possession, etc.) under the Migratory Bird Treaty Act (MBTA) of 1918 and under Sections 3503, 3503.5, and 3800 of the California Fish and Game Code. Activities that cause destruction of active nests, or that cause nest abandonment and subsequent death of eggs or young, may constitute violations of one or both of these laws.

1500 Iowa Avenue, Suite 200, Riverside, California 92507 951.781.9310 www.lsa.net

LSA is a business name of LSA Associates, Inc.

METHODS

The burrowing owl survey, including a habitat assessment, was conducted according to the *Staff Report on Burrowing Owl Mitigation, State of California Natural Resource Agency, Department of Fish and Game, May 7, 2012.* The survey protocol requires four field visits, the first between February 15 and April 15, and three visits between April 15 and July 15. Due to the timing of project start up, the first field visit was not able to be conducted.

The survey was conducted by LSA biologist Denise Woodard by walking transects spaced from 30 to 50 feet wide, and stopping periodically to search for owls with the use of binoculars. Potential habitat outside the survey area and within 500 feet of the project alignment was scanned with binoculars as feasible. Potential burrows, such as fossorial mammal burrows, as well as other manmade structures (e.g., earthen berms, concrete culverts, concrete, asphalt, rock, or wood debris piles, or openings beneath concrete or asphalt pavement) were examined for owl sign (e.g., feathers, pellets, whitewash, and prey remnants). Table A provides the survey data for each survey visit.

Table A: Burrowing Owl Survey Dates, Times, and Weather Conditions

Field Visit	Date (2018)	Time (24–Hour)	Weather Conditions		
			Temperature (°F)	Wind (mph)	Cloud Cover (%)
Habitat Assessment and Survey 1	May 3	0920–11:45	63–64	10–15	70
Survey 2	June 22	0630–0840	64–70	1–3	40
Survey 3	July 14	0600–0815	72–77	3–5	0

RESULTS

The Joshua woodland habitat within the survey area and adjacent undeveloped open space areas provides potentially suitable habitat for the burrowing owl. The habitats on site have been affected by off highway vehicle (OHV) use, homeless encampments, and trash dumping. A domestic dog, a potential predator of the burrowing owl, was observed during the July 14 survey. California ground squirrel (*Spermophilus beecheyi*) burrows and other potential burrow habitat features (debris piles) were found scattered throughout the survey area. Site photographs are provided as Figure 3.

Bird species observed during the survey are ash-throated flycatcher (*Myiarchus cinerascens*), common raven (*Corvus corax*), mainland cactus wren (*Campylorhynchus brunneicapillus anthonyi*), Say's phoebe (*Sayornis saya*), California horned lark (*Eremophila alpestris actia*), house sparrow (*Passer domesticus*), and house finch (*Haemorhous mexicanus*).

No burrowing owl, sign, burrows, or other burrow features potentially occupied by burrowing owl were detected during the survey period. Therefore, the burrowing owl is considered absent from the project site at this time.

Please contact me by phone at (951) 781-9310 or by email at denise.woodard@lsa.net with any questions you may have regarding this survey.

Sincerely,

LSA ASSOCIATES, INC.

Denise Woodard
Associate/Senior Biologist

Attachments: Figure 1: Regional and Project Location
Figure 2: Burrowing Owl Survey Area
Figure 3: Site Photographs

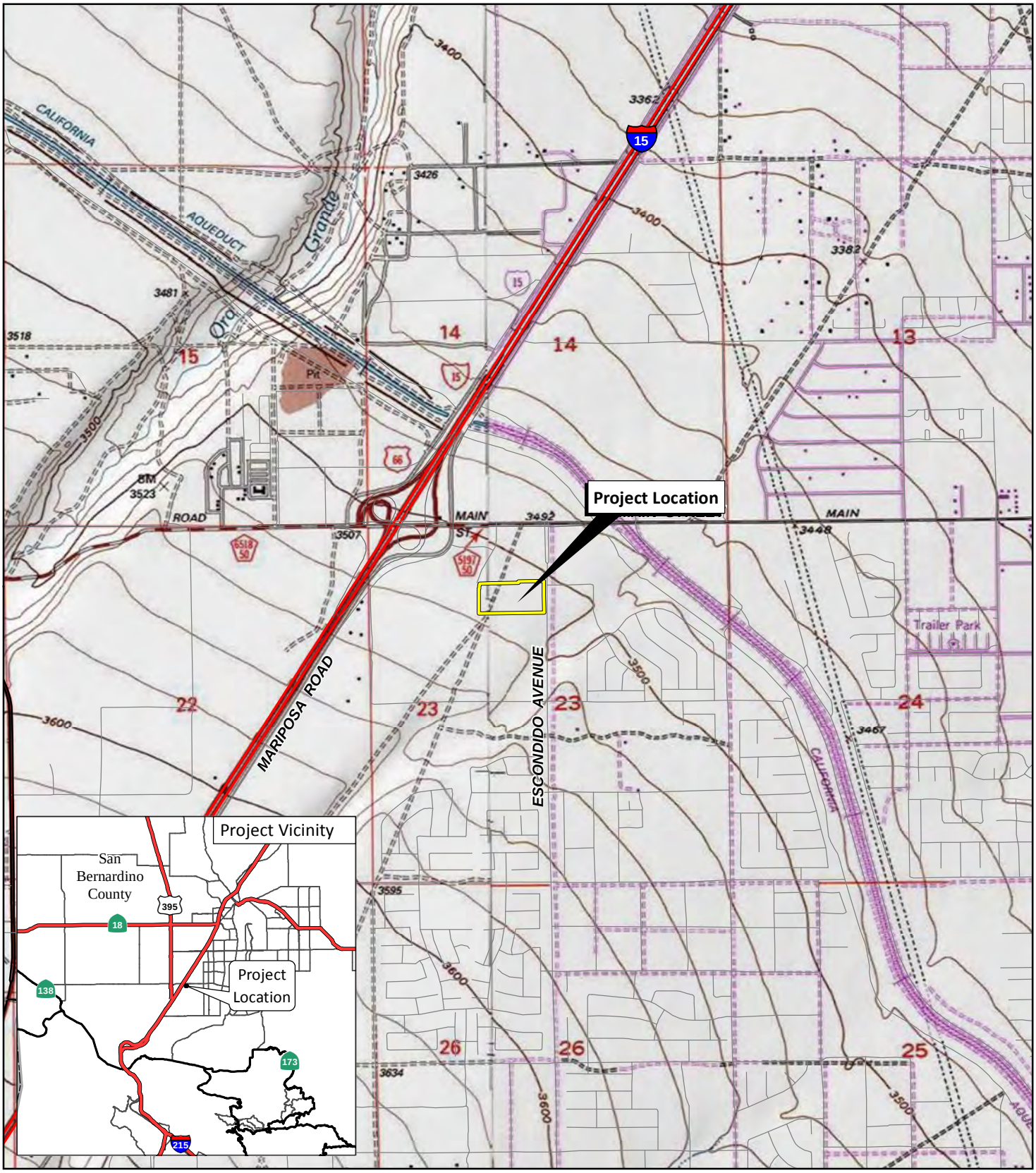

LSA

FIGURE 1

0 1000 2000
FEET

Hesperia Kaiser Permanente Medical Office Building

Regional and Project Location

SOURCE: USGS 7.5' Quads: Hesperia, 1980, Baldy Mesa, 1988, CA; ESRI Streetmap, 2013.

I:\KSP1801\Reports\Cultural\fig1_RegLoc.mxd (6/26/2018)

LSA

LEGEND

Survey Area

Photograph Locations

N

0 75 150

FEET

SOURCE: Google (2016)

I:\KSP1801\GIS\MXD\DesertTortoise_BurrowingOwl\BUOW_SurveyArea.mxd (7/27/2018)

FIGURE 2

Hesperia Kaiser Permanente Medical Office Building

Burrowing Owl Survey Area

1. View of general habitat conditions.

2. View of general habitat conditions.

3. View of general habitat conditions.

4. View of general habitat conditions.

LSA

FIGURE 3

Hesperia Kaiser Permanente Medical Building

Site Photographs

5. View of typical typical ground squirrel burrows observed.

LSA

FIGURE 3

Hesperia Kaiser Permanente Medical Building

Site Photographs

CARLSBAD
FRESNO
IRVINE
LOS ANGELES
PALM SPRINGS
POINT RICHMOND
RIVERSIDE
ROSEVILLE
SAN LUIS OBISPO

July 10, 2018

Skyler Denniston, Senior Land Use Manager
National Facilities Services
Kaiser Permanente
393 East Walnut Street, Fourth Floor
Pasadena, CA 91188

Subject: Kaiser Permanente Medical Office Project—Joshua Tree Relocation Plan

Dear Mr. Denniston:

This Joshua Tree Relocation Plan (Plan) serves to document the results of the protected desert native plant survey effort for Joshua trees (*Yucca brevifolia*) conducted on the above-referenced project site by LSA. The survey effort was completed on June 28, 2018. This Plan was prepared in accordance with Chapter 16.24 of the City of Hesperia (City) Municipal Code. The Plan includes the proposed treatment of Joshua trees (e.g., transplant or destroy) and the long-term maintenance and monitoring protocol.

The project site encompasses approximately 10 acres. Geographically, the project site is in the northeast quarter of Section 23, Township 4 North, Range 5 West, as shown on the *Hesperia*, *California* United States Geological Survey (USGS) 7.5-minute quadrangle (Figure 1; all figures attached). The elevation of the relatively flat site is approximately 3,500 feet. The soils present on site consist of sand and loamy fine sand. The dominant plant communities on site are salt bush scrub and Joshua tree juniper woodland. Dominant species identified in this community include annual bur-sage (*Ambrosia acanthicarpa*), bladder sage (*Salazaria mexicana*), Joshua tree, and California juniper (*Juniperus californica*). The project site is bordered on the north by commercial development, to the east by Escondido Avenue, and vacant, undeveloped land to the south and to the west.

BACKGROUND

This Plan for the Kaiser Permanente Medical Office Project is required under Chapter 16.24 of the City's Municipal Code in order to help mitigate impacts to Joshua trees and other desert plants resulting from development within the city limits. LSA associate biologist/International Society of Arboriculture (ISA) certified arborist Leo Simone prepared the Plan based on the requirements of the City Municipal Code and the results of a protected desert native plant survey LSA conducted for the site on June 28, 2018.

The Plan provides site preparation guidelines, Joshua tree transplantation procedures, maintenance requirements, and an explanation of the Joshua tree adoption program. Joshua tree transplantation operations are to take place in two phases: Phase 1 involves the excavation and the transplantation of Joshua trees from their original on-site location to a temporary on-site stockpile area; and

Phase 2 will be the permanent transplantation of the Joshua trees from the stockpile area to either designated on-site planting areas or placement in a Joshua tree adoption program.

The City requires that a "Special Inspector" be present during all Joshua tree transplantation activities and monitoring. The Special Inspector shall be an ISA-certified arborist or registered botanist qualified to assess the success of the transplantation effort and to recommend corrective measures, if needed.

The Plan requires that progress reports be prepared and submitted to the City following the completion of each phase of the Joshua tree transplantation effort. A "Final Native Desert Plants Report" summarizing the results of the transplantation activities must also be prepared and submitted to the City after all Joshua tree transplantation activities are completed. This Plan documents the total number of Joshua trees surveyed and a suitability rating of each Joshua tree suitable for transplantation (see Attachment A).

METHODS

LSA associate biologist Leo Simone (ISA Certified Arborist/Tree Risk Assessor WE-8491A) conducted the survey on June 28, 2018, with assistance from LSA assistant biologist Heather Monteleone. The proposed project site was surveyed on foot by walking 50 foot (ft) wide (approximate) belt transects. Joshua trees were judged as transplantable or nontransplantable based on a variety of attributes. Joshua trees were considered unsuitable for transplantation if the following applied:

- Infested by borers and/or beetles
- An immature sapling (less than 4 ft tall)
- Overcircumference (trunk circumference greater than 40 inches at 1 ft above the ground)
- Overtall (greater than 15 ft)
- Overbalanced (tree leaning severely or limbs all on one side)
- Incompatible with the spade (corm area greater than 3 square feet)
- Overmature (limbs drooping or fallen to the ground)
- Standing dead
- A dependent clone (a nontransplantable clone less than 4 ft tall and more than 3 ft from the parent tree)
- Down live (on the ground, yet still living)

All Joshua trees observed were inventoried using a global positioning system (GPS) unit and assigned a number. An aluminum tree tag was secured to each Joshua tree. Joshua trees determined to be suitable to transplant were flagged with blue flagging; Joshua trees determined to be nontransplantable were flagged with red flagging.

The survey was conducted between 7:30 a.m. and 11:00 a.m. Weather during the survey period was generally mild, with clear skies and light winds. Attachment A presents the results of the Joshua tree

survey, including individual tree attributes. Figure 2 illustrates these results on an aerial photograph: Joshua trees shown in blue are suitable for transplantation; Joshua trees shown as red are not suitable for transplanting.

Attachment B provides photographs of each of the Joshua trees surveyed, along with their identification numbers and suitability ratings.

RESULTS

A total of 39 Joshua trees were inventoried on the proposed project site. Of those Joshua trees, 19 are suitable for transplant and salvage efforts. The 20 Joshua trees that were judged unsuitable for transplant or salvage were deemed so due to having one or more negative attributes described in the Methods section above and as shown on the Joshua Tree Attributes and Survey Results in Attachment A.

Of the surveyed Joshua trees, 11 were given a qualitative transplantation suitability rating of good, 8 were given a fair transplantation suitability rating, and 20 Joshua trees given a qualitative transplantation suitability rating of poor.

Attachment A lists the Joshua tree attributes that were used to evaluate a tree for transplanting and presents the results of the survey, including the identification number of the tree and the Joshua trees suitable or not suitable for transplanting. If the Joshua tree was determined to be not suitable for transplanting, then an attribute for that determination is also shown.

TRANSPLANTATION METHODS

The optimal time of year for Joshua tree transplantation is in the cool season (i.e., fall or spring); excessive cold or heat may hinder transplantation success. A qualified Transplantation Contractor with a successful track record of Joshua tree transplantation shall use a large tree spade truck to transplant the Joshua trees.

Joshua trees that will be transplanted shall be prewatered 24 hours in advance of their removal. Slowly soaking the area around the Joshua tree softens the soil around the root ball and lubricates the area, making it easier for the tree spade to reach full depth with minimal disturbance to the root ball, thus maximizing the root and soil material that is harvested intact. The more root mass and soil that is harvested intact, the higher the likelihood of a successful transplantation. The receiver hole shall be excavated with the tree spade prior to extraction of the transplant Joshua tree, and the receiver hole shall be thoroughly irrigated. Where practicable, the Joshua tree shall be placed in the receiver hole at the same north-south orientation as it was in its original location to minimize sunscald. After placement in the new location, the soil around the Joshua tree shall be tamped to eliminate air spaces, and a 2- to 3-inch-high, hand-compacted earthen ring shall be formed just outside the circumference of the planting hole to form a watering basin. The Joshua tree will then be thoroughly deep-watered. At no time shall excavation or receiver holes remain uncovered overnight.

Following the initial watering at the time of transplantation, the Joshua trees should be deep-watered by laying the hose within the watering basin and running the water at a slow trickle for

several hours. Larger Joshua trees need deeper, but less frequent, watering events than smaller Joshua trees. For example, full-size Joshua trees should be watered with 30–50 gallons over several hours. Irrigation of smaller Joshua trees should be reduced accordingly; a group of smaller Joshua trees may only require 20 gallons of water over a 2-hour period. The Transplantation Contractor should take care to avoid oversaturation of the soil when watering the Joshua trees as this may cause the Joshua trees to topple or may cause root rot. The soil surrounding the Joshua trees should be allowed to dry out between watering events.

Following these guidelines does not guarantee that the Joshua trees will survive. General observations should be made regarding the establishment of the Joshua trees. Common sense and landscaping experience are valuable tools and should not be ignored. If the Joshua trees appear to be stressed (either too much or too little water), the watering regime should be adjusted. Signs of disease or structural changes (e.g., leaning or sagging) should be noted. The Joshua trees will be assessed by LSA or another Special Inspector selected by the City on a periodic basis; further guidance or remedial measures may be suggested at that time. Staff conducting the irrigation activities will be on site more frequently and may be able to make important observations regarding tree health.

MAINTENANCE

The Transplantation Contractor is responsible for the maintenance of the transplanted Joshua trees, in accordance with the following guidelines. Normal maintenance will include irrigation, weeding, and herbivore control. The Joshua trees must be maintained regularly to ensure successful survival of the transplanted Joshua trees. The transplant site(s) shall be kept neat, clean, and free of all nonvegetative debris and trash and vegetative debris accumulated during weeding activities.

Irrigation

The following guidelines for irrigation frequency should be followed (with allowances made for natural rainfall):

- First 6 Months
  - Large Joshua trees: Once every 2 weeks in the winter, and once per week in the summer.
  - Small Joshua trees: Once per week in the winter, and twice per week in the summer.
  - During winter: Simulate rainfall during watering events by showering the Joshua trees from above for several minutes. Do not directly or forcefully spray the Joshua tree. This may not be necessary in normal rainfall years.
- Remainder of Maintenance Period
  - Large Joshua trees: Once per month in the winter, and once every 2 weeks in the summer.
  - Small Joshua trees: Once every 2 weeks in the winter, and once per week in the summer.
  - During winter: Simulate rainfall during watering events by showering the Joshua trees from above for several minutes. Do not directly or forcefully spray the Joshua tree. This may not be necessary in normal rainfall years.

Weed Control

To ensure survival of the transplanted Joshua trees, the Transplantation Contractor shall remove nonnative weeds to reduce the amount of competition for natural resources, including water, nutrients, and sunlight. The amount of weeding required will be determined by the amount of weed seed in the soil, weather conditions, and the Transplantation Contractor's diligence in removing the weeds, thereby reducing the weed seed bank.

All weeds present shall be removed manually; no herbicide shall be permitted without express written authorization from the Special Inspector. No weed whipping or string-line trimmers shall be permitted within the Joshua tree transplanted area(s) without express written authorization from the Special Inspector. Special care must be taken to prevent damage to transplanted Joshua trees and other native plants.

Pest Control

The Transplantation Contractor shall use only those methods approved by the Special Inspector. The Transplantation Contractor shall implement control measures, which may require fencing of the site at the earliest sign of damage. In addition, the Restoration Contractor shall treat any insect infestation as necessary to protect the health and establishment of the transplanted Joshua trees, per the recommendation of the Special Inspector.

Fertilizer

The Transplantation Contractor shall not use chemical fertilizer on the Joshua trees during transplantation or stockpiling, unless directed by the Special Inspector.

MONITORING

To ensure that the transplanted Joshua trees are kept in compliance with this Plan, the transplanted Joshua trees will be evaluated quarterly prior to final landscape planting. A "Special Inspector" is required to be present during all Joshua tree transplantation activities and monitoring. The Special Inspector shall be an ISA-certified arborist or registered botanist qualified to assess the progress and success of the transplantation effort and to recommend corrective measures, if needed.

The monitoring shall be as follows:

- Monitoring for survival, appearance, and function of all transplanted Joshua trees will be completed quarterly. General compliance with this Plan will also be monitored.
- As part of the quarterly inspections, the Special Inspector will make note of the general health of the transplanted Joshua trees, and will make maintenance recommendations, if necessary.

JOSHUA TREE ADOPTION PROGRAM

The City requires that healthy, transplantable Joshua trees not relocated on site be placed into an adoption program. This portion of the Plan describes the procedures the City requires to establish an adoption program for the healthy, transplantable Joshua trees not used on site. The developer must submit a letter on company letterhead to the City describing the adoption program and the

community notification process. The program requirements, which must be described in the letter to the City, are as follows:

- The public notification process shall occur for a minimum of 3 weeks and may include notification via publications in local newspapers, radio advertisements, hand-distributed fliers, and similar notification techniques.
- The public notices shall identify the location where the Joshua trees may be viewed and the period of time during which the Joshua trees are available for adoption. The Joshua trees shall be made available for adoption for a minimum of two weeks, including weekends.
- The public notices shall provide the contact information, including an on-site or cellular phone number, for the person who will be available on site to assist with the Joshua tree adoption process. This person shall be responsible for locating the specific Joshua trees that will be removed and are thus available for adoption.
- Each adopter shall be provided with a copy of the City Joshua Tree Transplanting Guidelines.
- A log shall be submitted to the City that includes the name, address, and phone number of each participant in the adoption program, and the number of Joshua trees they have received.
- If fewer than 50 percent of the healthy, transplantable Joshua trees are adopted, the developer shall purchase the remaining adoptable Joshua trees (up to 50 percent of the total) at $350 per Joshua tree and recycle them at Advance Disposal.

Please contact me if you have any questions about this survey.

Sincerely,
LSA Associates, Inc.

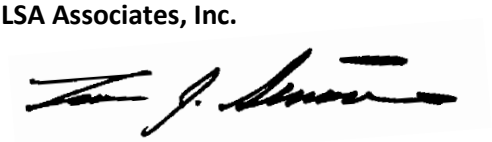

Leo Simone
Associate Biologist
ISA Certified Arborist WE-8491A

Attachments: Figure 1: Project Location Map
Figure 2: Aerial Photograph of Joshua Tree Survey Results
Attachment A: Joshua Tree Attributes and Survey Results
Attachment B: Photographs with Attributes of Stockpiled Joshua Trees

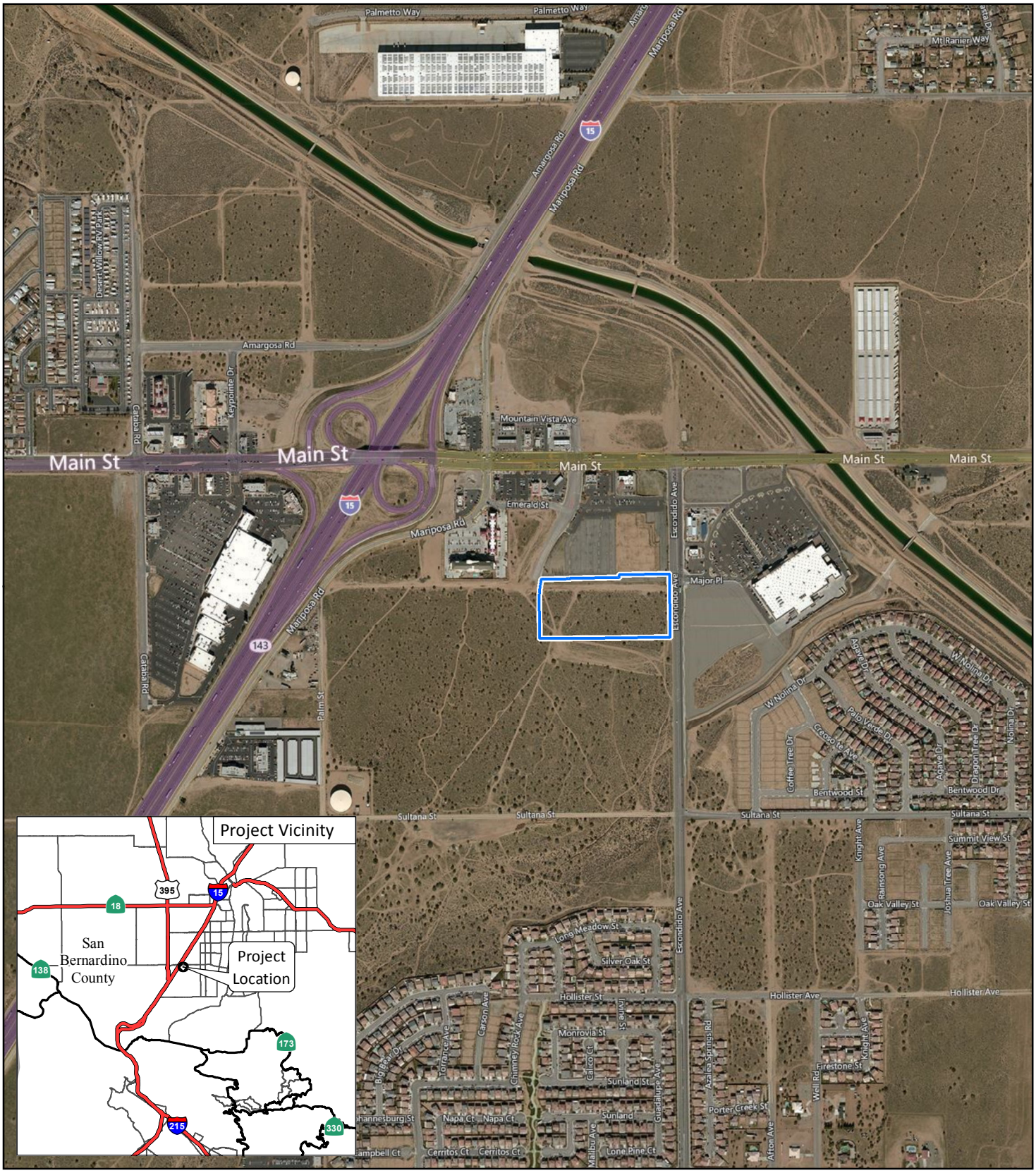

LSA

LEGEND

Project Location

FIGURE 1

0 500 1000
FEET

SOURCE: Bing Maps (2/2015)

I:\KSP1801\GIS\MXD\RegLoc.mxd (7/9/2018)

Kaiser Permanente Medical Office Project

Project Location

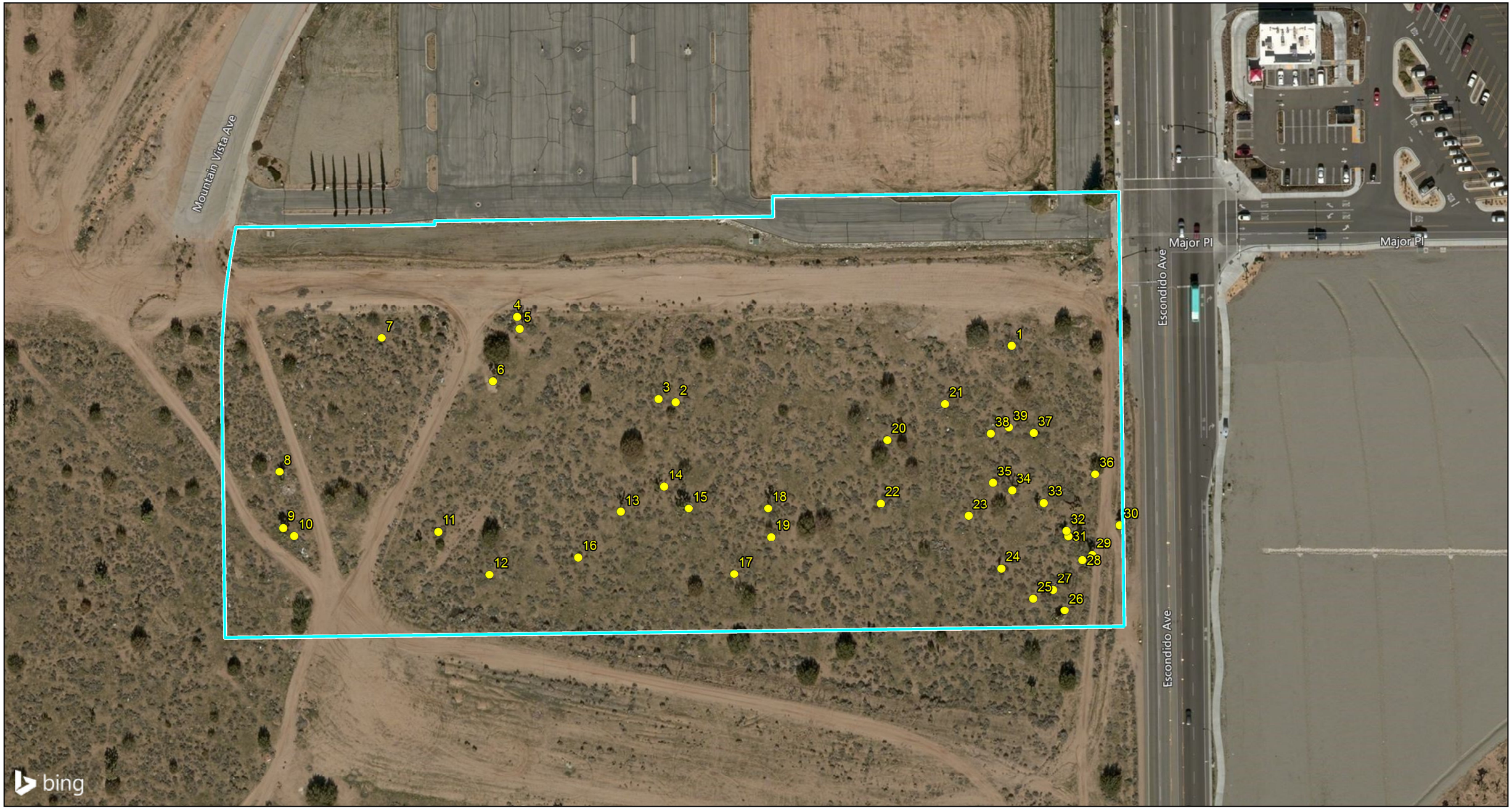

LSA

LEGEND

Project Location

Joshua Tree Location (with ID)

0 50 100
FEET

SOURCE: Bing Maps (2/2015); LSA (6/2018)

I:\KSP1801\GIS\MXD\JTreeSurvey.mxd (7/9/2018)

FIGURE 2

Kaiser Permanente Medical Office Project

Joshua Tree Survey

ATTACHMENT A

JOSHUA TREE ATTRIBUTES AND SURVEY RESULTS

JOSHUA TREE ATTRIBUTES AND SURVEY RESULTS

ID No.	Transplant	B	L	DC	OB	DL	OC	DS	OM	I	OT	IS	Remarks
1	Yes												5 ft; Good
2	Yes									X			3 ft; Fair
3	No									X			2 ft; Poor; immature sapling
4	No	X									X		20 ft; Poor; significant beetle damage
5	No									X			2 ft; Poor; immature sapling
6	No	X											18 ft; Poor; beetle damage severe decay
7	Yes												3 ft; Good
8	Yes	X											18 ft; Fair; minor beetle damage
9	No	X					X		X		X		25 ft; Poor; significant beetle damage
10	No	X											17 ft; Poor; severe decay at base of trunk
11	Yes												7 ft; Fair; minor branch damage
12	Yes												5 ft; Good
13	No	X									X		20 ft; Poor; severe decay beetle damage
14	No	X											17 ft; Poor; severe decay dead branches
15	No	X					X		X		X	X	20 ft: Poor; severe decay corvid nest
16	Yes												6 ft; Fair
17	No									X			2 ft; Poor; immature sapling
18	No	X							X			X	25 ft; Poor; beetle damage trunk decay
19	Yes												4 ft; Good
20	Yes												5 ft; Fair
21	No									X			2 ft; Poor; immature sapling
22	Yes												4 ft; Good
23	No									X			2 ft; Poor; immature sapling
24	Yes												10 ft; Good
25	No									X			2 ft; Poor; immature sapling
26	No					X						X	20 ft; Poor; severe decay at tree base
27	Yes												4 ft; Good; multi-trunk
28	No	X			X		X		X				25 ft; Poor; unbalanced crown
29	Yes												20 ft; Good; slight lean
30	Yes												15 ft; Fair
31	Yes												15 ft; Fair; minor beetle damage
32	No									X			2 ft; Poor; immature sapling
33	No							X					10 ft; Poor; dead with bee hive
34	No	X	X		X								18 ft; Poor; decay unbalanced crown
35	Yes												4 ft; Fair
36	Yes												5 ft; Good
37	No					X							10 ft; Poor; broken trunk severe decay
38	Yes												4 ft; Good
39	Yes												4 ft; Good

Key to Attributes:

B = Beetles
DC = Dependent Clone
DL = Down Live
DS = Dead Standing
I = Immature
IS = Incompatible with Spade
L = Limbs Lower than 8 feet
OB = Overbalanced
OC = Overcircumference
OM = Overmature
OT = Overtall (>15 feet)

ATTACHMENT B

PHOTOGRAPHS WITH ATTRIBUTES OF STOCKPILED JOSHUA TREES

Photograph 1: Good- 5 ft straight single trunk.

Photograph 2: Fair- 3 ft straight single trunk.

Photograph 3: Poor – 2 ft, immature sapling.

Photograph 4: Poor – 20 ft straight trunk, beetles.

Photograph 5: Poor – 2 ft, immature sapling.

Photograph 6: Poor – 18 ft, decay at base of trunk, beetles.

Photograph 7: Good – 3 ft single trunk.

Photograph 8: Fair – 18 ft, minor beetle bore at base of trunk.

Photograph 9: Poor – 25 ft, overcircumference, beetles.

Photograph 10: Poor – 17 ft, decay at base of trunk.

Photograph 11: Fair – 7 ft, broken off of dead parent.

Photograph 12: Good – 5 ft single trunk.

Photograph 13: Poor – 20 ft, borers at base.

Photograph 14: Poor – 17 ft, dead branches, decay at base, beetles.

Photograph 15: Poor – 20 ft, corvid nest, beetles.

Photograph 16: Fair – 6 ft.

Photograph 17: Poor - 2 ft, immature sapling.

Photograph 18: Poor – 25 ft, beetle damage trunk decay.

Photograph 19: Good – 4 ft.

Photograph 20: Fair – 5 ft

Photograph 21: Poor – 2 ft, immature sapling.

Photograph 22: Good – 4 ft.

Photograph 23: Poor – 2 ft, immature sapling.

Photograph 24: Good – 10 ft.

Photograph 25: Poor – 2 ft, immature sapling.

Photograph 26: Poor – 20 ft, severe decay at tree base, severe lean.

Photograph 27: Good – 4 ft, multi-trunk.

Photograph 28: Poor – 25 ft, unbalanced crown.

Photograph 29: Good – 20 ft, slight lean.

Photograph 30: Fair – 15 ft.

Photograph 31: Fair – 15 ft, minor beetle damage.

Photograph 32: Poor – 2 ft, immature sapling

Photograph 33: Poor – 10 ft, dead with beehive.

Photograph 34: Poor – 18 ft, decay and unbalanced crown.

Photograph 35: Fair – 4 ft.

Photograph 36: Good – 5 ft.

Photograph 37: Poor – 10 ft, broken trunk, severe decay.

Photograph 38: Good – 4 ft.

Photograph 39: Good – 4 ft.

CULTURAL RESOURCES ASSESSMENT

KAISER PERMANENTE MEDICAL OFFICE BUILDING PROJECT

CITY OF HESPERIA

SAN BERNARDINO COUNTY, CALIFORNIA

LSA

August 2018

CULTURAL RESOURCES ASSESSMENT

KAISER PERMANENTE MEDICAL OFFICE BUILDING PROJECT

CITY OF HESPERIA

SAN BERNARDINO COUNTY, CALIFORNIA

Prepared for:

Kaiser Permanente
393 East Walnut Street, 4th Floor
Pasadena, California 91188

Prepared by:

Riordan Goodwin
LSA Associates, Inc.
1500 Iowa Avenue, Suite 200
Riverside, California 92507
(951) 781-9310

LSA Project No. KSP1801

National Archaeological Data Base Information:

Type of Study: Records Search, Survey, Archaeological Assessment
USGS Quadrangle: *Hesperia, California*
Acreage: 10

LSA

August 2018

MANAGEMENT SUMMARY

LSA was retained by Kaiser Permanente (KP) to conduct a cultural resources assessment for the proposed medical office building in the City of Hesperia, San Bernardino County, California. The City required this study as part of the environmental review process to comply with the California Environmental Quality Act (CEQA).

A cultural resources records search, additional research, and a field survey were conducted for the project area. A historic period cultural resource previously documented within the project area was identified and does not appear to be a "historical resource" as defined by CEQA and the potential of the proposed project to affect previously undocumented resources is low. Therefore, no further cultural resources studies or monitoring are recommended.

In the event buried cultural materials are encountered during earthmoving operations associated with the project, all work in that area should be halted or diverted until a qualified archaeologist can evaluate the nature and significance of the finds.

In the event human remains are encountered, State Health and Safety Code Section 7050.5 states that no further disturbance shall occur until the County Coroner has made a determination of origin and disposition pursuant to Public Resources Code Section 5097.98. The County Coroner must be notified of the find immediately. If the remains are determined to be Native American, the County Coroner will notify the Native American Heritage Commission (NAHC), which will determine and notify a Most Likely Descendant (MLD). With the permission of the landowner or his/her authorized representative, the MLD may inspect the site of the discovery. The MLD shall complete the inspection within 48 hours of notification by the NAHC. The MLD will have the opportunity to offer recommendations for the disposition of the remains.

TABLE OF CONTENTS

MANAGEMENT SUMMARY i
TABLE OF CONTENTS ii
APPENDIX ii
FIGURE ii
TABLE iii
INTRODUCTION 1
SETTING 3
NATURAL SETTING 3
Hydrology 3
Biology 3
Geology 3
CULTURAL SETTING 3
Prehistory 3
Ethnography 4
History 5
METHODS 7
RECORDS SEARCH 7
ADDITIONAL RESEARCH 7
ARCHAEOLOGICAL FIELD SURVEY 7
RESULTS 8
RECORDS SEARCH 8
ADDITIONAL RESEARCH 9
ARCHAEOLOGICAL FIELD SURVEY 9
Old Baldy Mesa Pole Line 36-00451 10
DISCUSSION 10
RECOMMENDATIONS 11
REFERENCES 12

APPENDIX

A: DEPARTMENT OF PARKS AND RECREATION (DPR) 523 FORMS

FIGURE

Figure 1: Regional and Project Location 2

TABLE

Table A: Resources Within One Mile of the Project Area with DPR Documentation..... 8

INTRODUCTION

LSA was retained by Kaiser Permanente (KP) to conduct a cultural resources assessment for the proposed medical office building in the City of Hesperia, San Bernardino County, California. This assessment was completed pursuant to the California Environmental Quality Act (CEQA), Public Resources Code Chapter 2.6, Section 21083.2, and California Code of Regulations Title 14, Chapter 3, Article 5, Section 15064.5. The research and field survey were conducted to determine whether the proposed project could adversely affect any resources considered historical resources per CEQA.

The project is bounded by residential development to the north and vacant land to the east, west, and south. The project is depicted on the United States Geological Survey (USGS) *Hesperia, California* topographic quadrangle map in Section 23, Township 4 North, Range 5 West, San Bernardino Baseline and Meridian (USGS 1988; Figure 1). The project area is an approximately 10-acre lot (Assessor's Parcel Number 305701122) which is currently vacant. The proposed project is an approximately 55,000-square foot medical office building and associated parking.

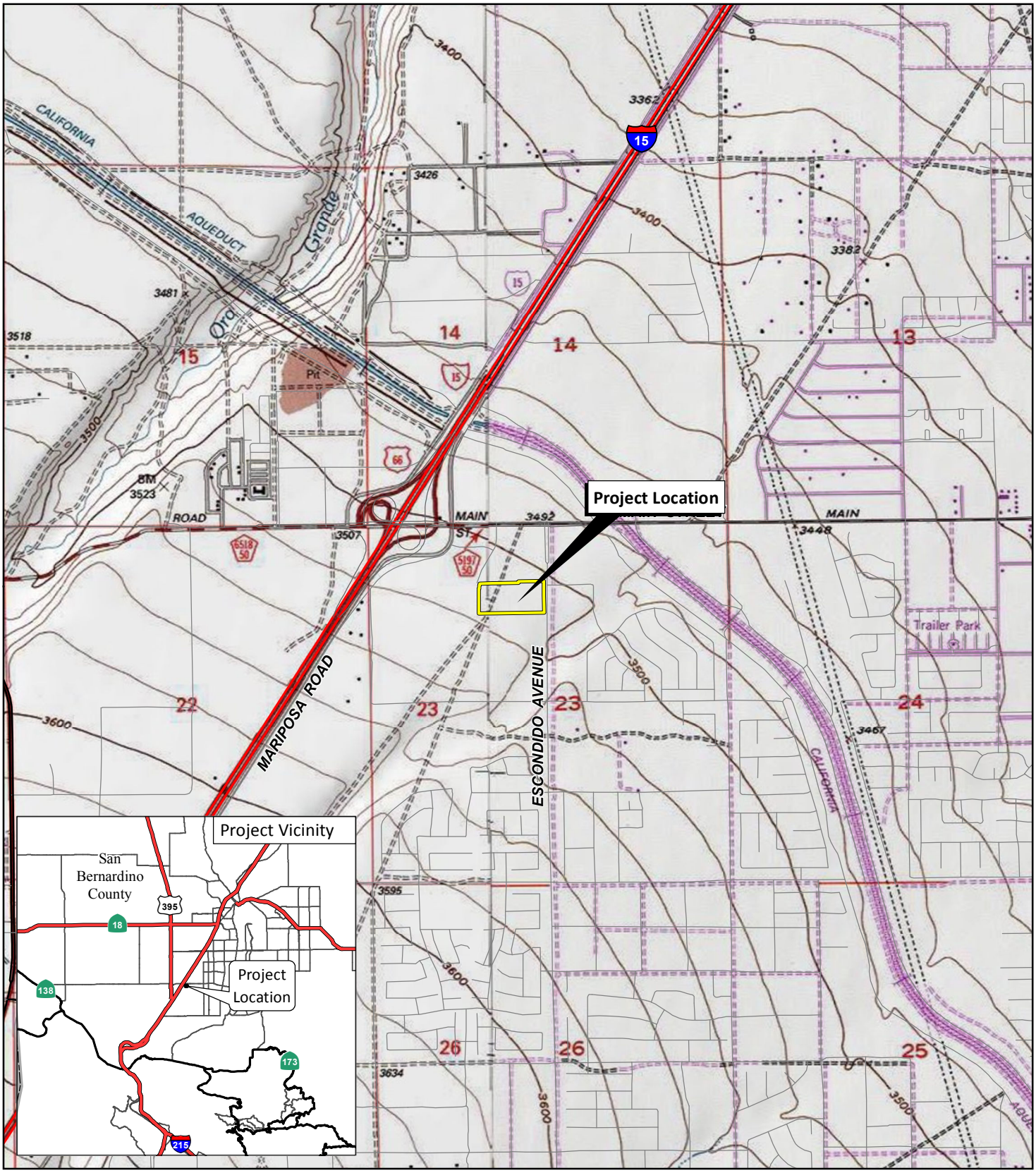

LSA

FIGURE 1

N

0 1000 2000
FEET

Hesperia Kaiser Permanente Medical Office Building

Regional and Project Location

SOURCE: USGS 7.5' Quads: Hesperia, 1980, Baldy Mesa, 1988, CA; ESRI Streetmap, 2013.

I:\KSP1801\Reports\Cultural\fig1_RegLoc.mxd (6/26/2018)

SETTING

NATURAL SETTING

The natural setting of the project vicinity is presented based on the underlying theoretical assumption that humans and human societies are in continual interaction with the physical environment. Being an integral and major part of the ecological system, humans adapt to the environment through technological and behavioral changes. Locations of archaeological sites are based on the constraints of these adaptations, whether it is proximity to a particular resource, topographical restrictions, or shelter and protection. Sites will also contain an assemblage of artifacts and ecofacts consistent with the particular interaction.

Hydrology

The project region is characterized by an arid climate, with dry, hot summers and moderate winters. Rainfall ranges from 5 to 8 inches annually (Beck and Haase 1974). Precipitation usually occurs in the form of winter rain, with warm monsoonal showers in summer. The project area is located approximately 2,000 feet west of the Mojave River, which drains north.

Biology

At an average elevation of approximately 3,500 feet above mean sea level (amsl), the project is within the Lower Sonoran Life Zone of California (Schoenherr 1992), which ranges from below sea level to 3,500 feet amsl. Common wild plants observed included creosote, rubber rabbitbrush, Joshua tree, and sparse xeric grass. Extensive fauna are known locally, including many endemic species of reptiles, birds, and insects.

Geology

The project is located in the Mojave Desert Geomorphic Province, which forms an elevated alluvial plain with large expanses of desert punctuated by isolated mountain ranges (California Geological Survey 2002; Norris and Webb 1976). This province is located on a wedge-shaped fault block bounded by the San Andreas Fault Zone and Transverse Ranges to the southwest and the Garlock Fault Zone and Tehachapi Mountains to the north (California Geological Survey 2002; Norris and Webb 1976). The geology of this province is similar to that of the Sierra Nevada, with numerous rock outcroppings useful to the Native Americans for resource milling, shelter and ceremonial art.

CULTURAL SETTING

Prehistory

Chronologies of prehistoric cultural change in Southern California have been attempted numerous times, and several are reviewed in Moratto (1984). No single description is universally accepted as the various chronologies are based primarily on material developments identified by researchers familiar with sites in a particular region and variation exists essentially due to the differences in those items found at the sites. Small differences occur over time and space, which combine to form patterns that are variously interpreted.

Currently, two primary regional culture chronology syntheses are commonly referenced in the archaeological literature. The first, Wallace (1955), describes four cultural horizons or time periods: Horizon I – Early Man (9000–6000 BC), Horizon II – Milling Stone Assemblages (6000–3000 BC), Horizon III – Intermediate Cultures (3000 BC–AD 500), and Horizon IV – Late Prehistoric Cultures (AD 500–historic contact). This chronology was refined (Wallace 1978) using absolute chronological dates obtained after 1955.

The second cultural chronology (Warren 1968) is based broadly on Southern California prehistoric cultures and was also revised (Warren 1984; Warren and Crabtree 1986). Warren's (1984) chronology includes five periods in prehistory: Lake Mojave (7000–5000 BC), Pinto (5000–2000 BC), Gypsum (2000 BC–AD 500), Saratoga Springs (AD 500–1200), and Protohistoric (AD 1200–historic contact). Changes in settlement pattern and subsistence focus are viewed as cultural adaptations to a changing environment, which begins with gradual environmental warming in the late Pleistocene, continues with the desiccation of the desert lakes, followed by a brief return to pluvial conditions, and concludes with a general warming and drying trend, with periodic reversals that continue to the present (Warren and Crabtree 1986).

After AD 500, there was an influx of Native American groups from the eastern deserts into southern California. These groups brought changes in subsistence focus and associated technologies, as well as burial practices. These cultural changes along with the group migrations are known as the Shoshonean Intrusion or Shoshonean Wedge (Kroeber 1925; Koerper 1979) and the Takic Wedge (Bergin and Ferraro 1999). The term Takic Wedge refers to the wedge of Takic culture groups that moved to the coast, displacing tribes of the Hokan and Yuman language stocks to the north and south (Shipley 1978). The ethnographically recorded Luiseño, Juaneño, and Gabrielino are thought to be the descendants of prehistoric Takic populations that settled along the coast during the Late Prehistoric Period, or perhaps even earlier. The Serrano and Cahuilla, more distant from the coast, are also Takic-speaking tribes within this wedge.

Ethnography

The project is located within the traditional cultural territory of the Serrano (Bean and Smith 1978; Kroeber 1925). Tribal territories were somewhat fluid and changed over time. Like other Native American groups in Southern California, they were semi-nomadic hunter-gatherers who subsisted by exploitation of seasonably available plant and animal resources. The first written accounts of Native American groups in Southern California were by Spanish missionaries in the late 18th century. Later documentation of the Serrano was by Benedict (1924), Bright (1975), Strong (1929), and many others.

Serrano

The Serrano lived in the area generally north of Cahuilla territory (western Riverside County), occupying much of present-day San Bernardino County and northeastern Los Angeles County, but there is some overlap in the perceived ancestral areas. The term Serrano is Spanish for "mountaineer" or "highlander" and was given to people who inhabited the areas of the San Bernardino Mountains that had no associated mission.

The Serrano were hunter-gatherers who relied on the women to do much of the collecting while the men hunted and captured various animals. Although they exploited whatever flora was available in the area they happened to be, generally they collected acorns, pinion nuts, honey, mesquite, yucca, and cactus fruits, in addition to various seeds, bulbs, and roots. Plants were consumed both raw and cooked. Food processing involved the use of manos, metates, mortars, and pestles. Antelope, deer, mountain sheep, rabbits, and rodents were killed and captured, and the most common hunting implements were the bow and arrow, throwing stick, traps, snares, and deadfalls. Meat was prepared in earth ovens, by boiling in watertight baskets, or by parching (Bean and Smith 1978).

Most of the Serrano lived in small villages near reliable sources of water (springs, perennial seeps, streams, and small lakes) (Benedict 1924). They lived in tule-covered, dome-shaped structures and had ceremonial houses and sweat houses for their religious activities. The basic settlement unit was a village with a number of small satellite resource-gathering camps.

The Serrano had a patrilineal society composed of clans and families linked by both ancestry and ceremony. Three clans divided this group: the Mohineyam, the Yuhevatam, and the Maringayam. The Serrano were also divided by moieties: the Wildcats and the Coyotes.

With the Spanish intrusion came a drastic change in lifestyle for the natives of Southern California. Incorporation of the indigenous populations into the mission system led to the disruption of native cultures and changes in subsistence and land use practices. Mission San Gabriel, established in 1771, probably had a limited effect on the Serrano population until the San Bernardino Asistencia were established in what would become Redlands around 1820 (Harley 1988). Within a short time, the missions controlled many ranchos where Indians lived and worked.

History

In California, the historic era is generally divided into three periods: the Spanish Period (1769–1821), the Mexican Period (1821–1848), and the American Period (1848–present). As the resource identified within the project area dates to the 20th century, this historic context will focus on San Bernardino County and the City of Hesperia.

San Bernardino County

San Bernardino County was created in 1853 from portions of Los Angeles and San Diego Counties due to its mineral wealth. After the San Bernardino Baseline and Meridian were established that same year, the desert began to be surveyed in earnest. This facilitated homesteading and mining activities that led to the settlement of the Mojave. The need to transport lumber and supplies to the region resulted in the establishment of a road from the town of San Bernardino through the San Bernardino Mountains in the 1850s. The Oro Grande Mining District, consisting of Hesperia, Victor, and Oro Grande yielded gold, silver, gem stones, marble, and limestone (Sturm 1993). In 1883, the California Southern Railroad, later to be the Atchison, Topeka, and Santa Fe Railroad (AT&SF), was built in the Cajon Pass (Sturm 1993). Agriculture ultimately replaced mining as the county's economic base, with thousands of acres under cultivation by the beginning of World War I (McGroarty 1914).

Hesperia (From Tibbet 2018)

Hesperia was established by German investors in 1869 and initially prospered by providing supplies for the surrounding mining communities. When the California Southern Railway depot was constructed in Hesperia in 1885, the amount and variety of goods available to local merchants increased greatly. The railroad also created additional depots and support towns in the region. During the early 1900s, with the advent of cross-country automobile travel, travelers passed directly through Hesperia, which was the last major stopping point for automotive services prior to crossing the Cajon Pass. However, the little community suffered a major blow in 1923 when Route 66 (now Interstate 15 (I-15) was located several miles to the west, bypassing the little community. By 1926, Route 66 was paved from Victorville southwest to Los Angeles and plans were underway to install an upgraded gravel surface northeast from Victorville to Daggett (Mead & Hunt, Inc. 2011).

Hesperia's remote location kept development to a minimum through the 1920s, 1930s, and 1940s. A review of historic USGS maps reveals that Ranchero Road did not exist until sometime between 1936 and 1941, when it extended from 7th Avenue west to the California-Nevada Power Lines/Maple Avenue (USGS 1942). During the 1950s, the area became popular with land speculators for its vast tracts of cheap real estate and development spread in all directions from the original core of the community near Main Street and First Avenue (USGS 1956a). However, Ranchero Road did not extend to Route 66/I-15 until sometime between 1956 and 1968 (USGS 1956b, 1968). Until subdivisions began to take shape in the 1980s, there was little to no development south of Ranchero Road and development north of the road was very sparse (Historicaerials.com var.). The 1980s surge in development formed the foundation for the current community, which was incorporated in 1988 (McGinnis 2005).

METHODS

RECORDS SEARCH

On July 12, 2018, the cultural resources records search was conducted for the project area by the South Central Coastal Information Center (SCCIC) located at California State University, Fullerton. It included a review of all recorded historic and prehistoric archaeological sites within one mile of the project, as well as a review of known cultural resource survey and excavation reports. In addition, the California State Historic Property Data File (HPD), which includes the National Register of Historic Places (National Register), California Historical Landmarks (CHL), and California Points of Historical Interest (CPHI), was searched.

ADDITIONAL RESEARCH

In June and July 2018, LSA Archaeologist Riordan Goodwin conducted additional research, including review of historic period aerial photographs and maps.

ARCHAEOLOGICAL FIELD SURVEY

On July 17, 2018, LSA Archaeological Technician Carlton Bennett completed an intensive pedestrian survey of the project parcel. The property was surveyed in systematic parallel transects spaced by approximately 10 meters (approximately 35 feet). Special attention was paid to areas of exposed soil for surface artifacts and features and rodent burrows for evidence of archaeosols. The purpose of this survey was to identify and document, prior to the beginning of ground-disturbing activities, any cultural resources and thus also to identify any area(s) that might be sensitive for buried cultural resources.

RESULTS

RECORDS SEARCH

Data from the SCCIC indicate there have been 35 cultural resource studies previously conducted within one mile of the proposed project, one of which includes a portion of the project area (Buringer 2002). One historic period linear resource, the Old Baldy Mesa Pole Line (36-004251), transects the project area. A multicomponent site was documented approximately 4,750 feet (0.9 mile) west of the project area and an additional 41 historic period resources have been recorded within one mile, including a power transmission line, a water conveyance system, roads, foundations, refuse scatters, and isolated artifacts (Table A).

Table A: Resources Within One Mile of the Project Area with DPR Documentation

Primary #	OHP #	Site Description	Status Code
36-004179	—	Canal Lane	—
36-004251*	—	Old Baldy Mesa Pole Line	—
36-004287	—	Oak Hill Cutoff (road)	—
36-004268	—	White Road Cutoff (road)	—
36-004275	—	Houghton's Crossing Road	—
36-007739	—	Historic period refuse scatter	—
36-007743	—	Historic period refuse scatter	—
36-007744	—	Historic period refuse scatter	—
36-007745	—	Historic period refuse scatter	—
36-008082	—	Phelan Road	—
36-010288	—	Historic period refuse scatter	—
36-010315	—	Boulder Dam-San Bernardino Transmission Line	—
36-010316	—	Kramer-Victorville Transmission Line	—
36-010920	—	Historic period refuse scatter	—
36-010921	—	Historic period refuse scatter	—
36-011264	—	Historic period refuse scatter	—
36-011265	—	Historic period refuse scatter	—
36-011266	—	Historic period refuse scatter	—
36-011267	—	Historic period refuse scatter	—
36-011268	—	Historic period refuse scatter	—
36-011269	—	Historic period refuse scatter	—
36-011270	—	Historic period refuse scatter	—
36-011272	—	Road	—
36-011273	—	Road	—
36-012056	—	Historic period refuse scatter, foundation remnants	—

Table A: Resources Within One Mile of the Project Area with DPR Documentation

Primary #	OHP #	Site Description	Status Code
36-012340	—	Multicomponent (?) site	—
36-012343	—	Historic period refuse scatter	—
36-012345	—	Road	—
36-013777	—	Historic period refuse scatter	—
36-020473	—	Historic period isolated artifact	—
36-021289	—	Historic period refuse scatter	—
36-021301	—	Historic period refuse scatter	—
36-021303	—	Historic period refuse scatter	—
36-021304	—	Historic period refuse scatter	—
36-021351	—	California Aqueduct	—
36-021365	—	Historic period refuse scatter	—
36-021366	—	Historic period refuse scatter	—
36-026211	—	Historic period refuse scatter	—
36-026212	—	Historic period refuse scatter	—
36-026213	—	Historic period refuse scatter	—
36-060848	—	Historic isolated artifacts	—
36-060849	—	Historic period isolated artifact	—
36-064587	—	Historic period isolated artifacts	—
36-064588	—	Historic period isolated artifacts	—

* Within project area

ADDITIONAL RESEARCH

Review of historic period aerial photographs and site record updates indicates that, although there were never any buildings within the project area, the Old Baldy Mesa Pole Line was in use from at least the early 1940s and was removed sometime in the mid-to-late 1980s (Historic Aerials.com var.; Petersen 1991).

ARCHAEOLOGICAL FIELD SURVEY

Mr. Bennett conducted the pedestrian survey of the entire project area. Visibility was good at approximately 85 percent with the surface partially obscured by vegetation. The project parcel has been subjected to surface disturbance from off-road activities. Sparse modern refuse was noted on the surface throughout the project parcel. Soils are silty alluvium. With the exception of the previously documented historic period utility pole alignment that transects the project area, no cultural resources were identified (see below).

Old Baldy Mesa Pole Line 36-00451

An approximately 480-foot segment of this linear resource transects the current project area. Its condition is poor; the pole line is gone and the road alignment has been obscured by other dirt roads/tracks/off-road activity. Only trace modern and temporally ambiguous refuse (i.e., rusted can fragments) were noted in the immediate vicinity.

DISCUSSION

This is a typical example of a common resource type: a historic period telephone pole alignment and associated dirt road. This segment of the linear resource does not appear to be associated with any important events or individuals, uniquely represent temporally specific engineering, or retain any potential for significant data. Therefore, it is not a “historical resource” under CEQA and its cultural resource value has been realized by the current supplementary documentation.

RECOMMENDATIONS

A cultural resources records search, additional research, and a field survey were conducted for the project area. A historic period cultural resource previously documented within the project area was identified and does not appear to be a "historical resource" as defined by CEQA and the potential of the proposed project to affect previously undocumented resources is low. Therefore, no further cultural resources studies or monitoring are recommended.

In the event that archaeological materials are encountered during construction, all construction work should be halted and a qualified archaeologist consulted to determine the appropriate treatment of the discovery (California Code of Regulations, Title 14, Chapter 3, Section 15064.5(f)).

In the event human remains are encountered, State Health and Safety Code Section 7050.5 states that no further disturbance shall occur until the County Coroner has made a determination of origin and disposition pursuant to Public Resources Code Section 5097.98. The County Coroner must be notified of the find immediately. If the remains are determined to be Native American, the County Coroner will notify the NAHC, which will determine and notify an MLD. With the permission of the landowner or his/her authorized representative, the MLD may inspect the site of the discovery. The MLD shall complete the inspection within 48 hours of notification by the NAHC. The MLD will have the opportunity to offer recommendations for the disposition of the remains.

REFERENCES

Bean, Lowell John, and Charles R. Smith
1978 Serrano. In *California*, edited by R.F. Heizer, pp. 570–574. *Handbook of North American Indians,* vol. 8, W.C. Sturtevant, general editor, Smithsonian Institution, Washington, D.C.

Beck, Warren A., and Ynez D. Haase
1974 *Historical Atlas of California*. Norman, Oklahoma: University of Oklahoma Press.

Benedict, Ruth F.
1924 A Brief Sketch of Serrano Culture. *American Anthropologist* 26 (3).

Bergin, Kathleen Ann, and David D. Ferraro
1999 Historic Properties Treatment Plan: Geotechnical Investigations of the CP Alignment of the Foothill Transportation Corridor—South, Orange and San Diego Counties, California. LSA Associates, Inc. Ms. on file, LSA Associates, Inc., 20 Executive Park, Suite 200, Irvine, California, 92614; Southwest Division, Naval Facilities Engineering Command, 1220 Pacific Highway, San Diego, California; and AC/S Environmental Security Office, MCB Camp Pendleton, California.

Bright, William
1975 Two Notes on Takic Classification: Paper read at the Third Annual Uto-Aztecan Conference, Flagstaff, June 19–20, 1975. (Copy, Manuscript No. 76–66 in National Anthropological Archives, Smithsonian Institution, Washington.)

Buringer, Fred E.
2002 A Cultural Resources Phase I Archaeological Survey of the 138-acre Hesperia Master Plan Parcel, City of Hesperia, San Bernardino County, California.

California Geological Survey
2002 *California Geomorphic Provinces.* California Geologic Survey Note 36. California Department of Conservation.

Harley, R. Bruce
1988 Rev. Juan Caballeria: Historian or Storyteller? Rethinking the 1810 Dumetz Expedition. *San Bernardino County Museum Quarterly* 35(2), 42p.

HistoricAerials.com
1938 Aerial photograph of project area.
1968 Aerial photograph of project area.
1980 Aerial photograph of project area.

Koerper, Henry C.
1979 On the Question of the Chronological Placement of Shoshonean Presence in Orange County, California. *Pacific Coast Archaeological Society Quarterly* 15(3):69-84.

Kroeber, Alfred L.
1925 *Handbook of the Indians of California*. Bureau of American Ethnology Bulletin No. 78 Washington D.C.: Smithsonian Institute. Reprinted in 1976, New York: Dover Publications.

Mead & Hunt, Inc.
2011 National Register of Historic Places Multiple Property Documentation Form for U.S. Highway 66 in California.

McGinnis, Myra
2005 City of Hesperia Website, Our City's History. Electronic document: http://www.ci.hesperia.ca.us/article.cfm?id=12. Accessed April 20, 2006.

McGroarty, John Steve
1914 Southern California. Southern California Panama Exposition Commission.

Moratto, Michael J.
1984 *California Archaeology*. San Diego: Academic Press.

Norris, R.M., and R.W. Webb
1976 *Geology of California*. New York: John Wiley and Sons, Inc. 379 pp.

Petersen, J.
1991 Site record update for 36-004251/CA-SBr-4251H.

Schoenherr, Allan A.
1992 *A Natural History of California*. University of California Press, Berkeley and Los Angeles.

Shipley, William F.
1978 Native Languages of California. In R. Heizer ed., *Handbook of North American Indians,* vol. 8, California, pp. 80–90. Smithsonian Institution, Washington D.C.

Strong, William D.
1929 Aboriginal Society in Southern California. *University of California Publications in American Archaeology and Ethnology* 26(1): 1–358. Berkeley.

Sturm, Brad
1993 Adelanto-Lugo Transmission Project Cultural Resources Assessment. Draft report prepared by Woodward-Clyde Consultants, Goleta, California.

Tibbet, Casey
2018 Impacts Assessment - Ranchero Bridge Replacement Over the California Aqueduct Project. City of Hesperia San Bernardino County, California

United States Geological Survey
1942 *Hesperia, California* 7.5-minute topographical map, surveyed in 1940–41.
1956a *Hesperia, California* 7.5-minute topographical map, field checked in 1956.

1956b *Baldy Mesa, California* 7.5-minute topographical map, field checked in 1956.
1968 *Baldy Mesa, California* 7.5-minute topographical map.
1988 *Redlands, California* 7.5 minute topographic quadrangle.

Wallace, William J.
1955 A Suggested Chronology for Southern California Coastal Archaeology. *Southwestern Journal of Anthropology* 11(3):214-230.
1978 Post-Pleistocene Archaeology. In California, edited by R. Heizer, pp. 550–563. *Handbook of North American Indians,* Vol. 8. W.C. Sturtevant, general editor. Smithsonian Institution, Washington, D.C.

Warren, Claude N.
1968 Cultural Tradition and Ecological Adaptation on the Southern California Coast. Eastern New Mexico University Contributions in Anthropology 1(3). Portales.
1984 The Desert Region. In *California Archaeology*, by M. Moratto with contributions by D.A. Fredrickson, C. Raven, and C. N. Warren, pp. 339–430. Academic Press, Orlando, Florida.

Warren, Claude N., and Robert H. Crabtree
1986 Prehistory of the Southwestern Area. *In* W.L. D'Azevedo ed., *Handbook of the North American Indians,* Vol. 11, *Great Basin*, pp. 183–193. Washington D.C.: Smithsonian Institution.

APPENDIX A

DEPARTMENT OF PARKS AND RECREATION (DPR) 523 FORMS

State of California ⊂ The Resources Agency

DEPARTMENT OF PARKS AND RECREATION

CONTINUATION SHEET

Primary # 36-004251

HRI #

Trinomial CA-SBR-4251/H

Page 1 of 1 *Resource Name or #: (Assigned by recorder) Baldy Mesa Pole Line

*Recorded by Carleton Bennett *Date: 7/2/2018 ____ Continuation x Update

An approximately 480-foot segment of this resource transects the current project area and its condition is poor - the pole line is gone and the road alignment has been obscured by other dirt roads/tracks/off-road activity. Only trace modern and temporally ambiguous refuse (i.e., rusted can fragments) were noted in the immediate vicinity. This is a typical example of a common resource type: a historic period telephone pole alignment and associated dirt road. This segment of the linear resource does not appear to be associated with any important events or individuals, uniquely represent temporally specific engineering, or retain any potential for significant data. Therefore, it is not a "historical resource" under CEQA.

View south/southwest of pole line/road alignment.

CARLSBAD
FRESNO
IRVINE
LOS ANGELES
PALM SPRINGS
POINT RICHMOND
RIVERSIDE
ROSEVILLE
SAN LUIS OBISPO

MEMORANDUM

DATE: October 4, 2018

TO: Skyler Denniston, National Director – Land Use, National Facilities Services, Kaiser Permanente

FROM: Sarah Rieboldt, Ph.D., Associate/Senior Paleontologist, LSA

SUBJECT: Paleontological Analysis of the Hesperia Kaiser Permanente Medical Office Building Project, Hesperia, San Bernardino County, California

INTRODUCTION

This memorandum was prepared to ensure that the Hesperia Kaiser Permanente Medical Office Building Project (project) in Hesperia, San Bernardino County, California, is in compliance with all applicable State and local regulations and requirements regarding paleontological resources, as well as guidelines of the Society of Vertebrate Paleontology (SVP, 2010). The applicable regulations, requirements, and policies include the California Environmental Quality Act (CEQA), Public Resources Code (PRC) Division 13, Chapter 2.6; the *State CEQA Guidelines*, California Code of Regulations (CCR), Title 14, Chapter 3, Appendix G; PRC 5097.5; and the Final Environmental Impact Report prepared for the City of Hesperia (City) General Plan Update (Michael Brandman and Associates, Inc., 2010). This memorandum addresses the potential for the project to impact paleontological resources and, if needed, includes mitigation measures and other recommendations to minimize these impacts. The City is the Lead Agency under CEQA.

PROJECT DESCRIPTION AND LOCATION

The proposed project consists of the development of a two-story medical office building (outpatient support) with a total of approximately 55,000 square feet of floor area. A drop-off/pick-up zone will be provided along the eastern portion of the medical office building. A total of 275 surface parking spaces are planned to be provided on site. On-site drainage will be directed to an underground storm water retention facility. The project includes the extension of water, sewer, and utility lines from existing in-street facilities. The geotechnical report prepared for the project recommends removing the upper 7 feet (ft) of material in the project site and replacing it with properly compacted fill to the appropriate site elevation in the areas of the building pads (Geobase, Inc., 2018).

The project site is an approximately 10-acre area south of Main Street that is bounded by Escondido Avenue to the east, Mountain Vista Avenue to the west, commercial uses to the north, and undeveloped land to the south. The project site is depicted on the United States Geological Survey

(USGS) *Hesperia, California* 7.5-minute topographic quadrangle map in Township 4 North, Range 5 West, Section 23, San Bernardino Baseline and Meridian (USGS, 1980; Figure 1, Attachment B).

METHODS

LSA examined geologic maps of the project site and reviewed relevant geological and paleontological literature to determine which geologic units are present in the project site and whether fossils have been recovered from those or similar geologic units elsewhere in the region. A search for known fossil localities was also conducted through the Natural History Museum of Los Angeles County (LACM) in order to determine the status and extent of previously recorded paleontological resources within and surrounding the project site.

RESULTS

Literature Review

The project is located in the Mojave Desert Geomorphic Province, which forms an elevated alluvial plain with large expanses of desert punctuated by isolated mountain ranges (California Geological Survey, 2002; Norris and Webb, 1976). This province is located on a wedge-shaped fault block bounded by the San Andreas Fault Zone and Transverse Ranges to the southwest and the Garlock Fault Zone and Tehachapi Mountains to the north (California Geological Survey, 2002; Norris and Webb, 1976). Because the province extends into Nevada, the state line forms the eastern boundary for California (California Geological Survey, 2002; Norris and Webb, 1976). Precambrian through Mesozoic igneous, metamorphic, and sedimentary rocks compose the basement and many of the mountain ranges throughout the province, while Cenozoic sedimentary and igneous rocks fill the basins, line the flanks of the mountain ranges, and form subordinate features (Norris and Webb, 1976; Sharp, 1976). The province has an enclosed drainage with many playas, or dry lakes, that currently only fill with water for a short period of time during storm events (California Geological Survey, 2002; Sharp, 1976). During the Pleistocene, however, these dry lakes may have been filled with water year-round (Norris and Webb, 1976).

Geologic mapping by Morton and Miller (2006) shows that the entire project area is underlain by Young Alluvial Fan Deposits, Unit 3, which are middle Holocene in age (4,200–8,200 years ago; International Commission on Stratigraphy [ICS], 2018). These deposits consist predominantly of medium-brown silt and sand with occasional pebbles and pebble lenses (Morton and Miller, 2006). These sediments were eroded from higher elevations, carried by flooding streams and debris flows, and deposited in a fan or lobe shape at the base of the hills. They show slight to moderate dissection to varying depths by small to large washes (Morton and Miller, 2006).

Although Holocene deposits can contain remains of plants and animals, only those from the middle to early Holocene (4,200 to 11,700 years ago; ICS, 2018) are considered scientifically important (SVP, 2010). These Holocene deposits overlie older Pleistocene deposits, which have produced scientifically important fossils elsewhere in the region (Jefferson, 1991a, 1991b; Miller, 1971; Reynolds and Reynolds, 1991; Springer et al., 2009). These older deposits span the end of the Rancholabrean North American Land Mammal Age, which dates from 11,000 to 240,000 years ago (Sanders et al., 2009) and was named for the Rancho La Brea fossil site in central Los Angeles. The

presence of *Bison* defines the beginning of the Rancholabrean North American Land Mammal Age (Bell et al., 2004), but fossils from this time also include other large and small mammals, reptiles, fish, invertebrates, and plants (Jefferson, 1991a, 1991b; Miller, 1971; Reynolds and Reynolds, 1991; Springer et al., 2009). There is a potential to find these types of fossils in the older sediments of this geologic unit, which may be encountered below a depth of approximately 10 ft. Therefore, these deposits are assigned low paleontological sensitivity from the surface to a depth of 10 ft and high sensitivity below that mark.

Fossil Locality Search

According to the locality search conducted by the LACM, there are no known fossil localities within the boundaries of the project. The LACM reports that the project site is underlain by deposits of younger Quaternary alluvium (i.e., Young Alluvial Fan Deposits, Unit 3, as mapped by Morton and Miller [2006]). The museum notes that these geologic units typically do not contain scientifically significant fossils in the uppermost layers but, at depth, older Quaternary deposits may produce important fossils.

The closest vertebrate locality in these older Quaternary deposits is LACM 1224, northeast of the project site and west of Spring Valley Lake. This locality produced a specimen of camel (*Camelops*). East-southeast of the project site, on the west side of the Mojave River below the bluffs, a mammoth (*Mammuthus*) was recovered from an unspecific locality. The next closest locality is LACM 7786, which is north-northwest of the project site between Adelanto and the former George Air Force Base. That locality yielded a specimen of meadow vole (*Microtus*).

The LACM believes that shallow excavations in the Young Alluvial Fan Deposits, Unit 3, in the project site are unlikely to encounter any scientifically important vertebrate fossils. However, the museum notes that deeper excavations into these deposits may encounter scientifically significant vertebrate remains and should be monitored to recover those remains. A copy of the letter describing the locality search results from the LACM is provided in Attachment C.

CONCLUSIONS AND RECOMMENDATIONS

The Young Alluvial Fan Deposits, Unit 3, mapped within the project site are considered to have low paleontological sensitivity from the surface to a depth of 10 ft and high paleontological sensitivity below a depth of 10 ft. Because project excavation is not anticipated to extend below a depth of approximately 7 ft below the surface and will therefore remain in deposits with low paleontological sensitivity, LSA recommends the following mitigation measure:

PALEO-1 If paleontological resources are encountered during the course of ground disturbance, work in the immediate area of the find shall be redirected and a paleontologist shall be contacted to assess the find for scientific significance. If determined to be significant, the fossil shall be collected from the field. The paleontologist may also make recommendations regarding additional mitigation measures, such as paleontological monitoring. Scientifically significant resources shall be prepared to the point of identification, identified to the lowest taxonomic

level possible, cataloged, and curated into the permanent collections of a museum repository. If scientifically significant paleontological resources are collected, a report of findings shall be prepared to document the collection.

Implementation of this mitigation measure will ensure that project impacts to scientifically significant paleontological resources will be mitigated to a level that is less than significant.

Attachments: A – References
B – Figure 1: Regional and Project Location
C – Paleontological Locality Search Results from the Natural History Museum of Los Angeles County

ATTACHMENT A

REFERENCES

Bell, Christopher J., Ernest L. Lundelius, Jr., Anthony D. Barnosky, Russell W. Graham, Everett H. Lindsay, Dennis R. Ruez, Jr., Holmes A. Semken, Jr., S. David Webb, and Richard J. Zakrzewski
2004 *The Blancan, Irvingtonian, and Rancholabrean Mammal Ages*. Chapter 7 in Michael O. Woodburne, ed., Late Cretaceous and Cenozoic Mammals of North America. pp. 232–314.

California Geological Survey
2002 *California Geomorphic Provinces*. California Geologic Survey Note 36. California Department of Conservation.

Geobase, Inc.
2018 *Geoetechnical Report, Kaiser Permanente, SFNT 2018 MLF Hesperia MOB D0476, Vacant Parcels 5-9, APN #3057-011-22-0-00 thru 3057-011-26-0-000, Escondido Avenue, Hesperia, California.* Prepared for Kaiser Permanente Health Plan, Inc. by Geobase, Inc., May 9, 2018. Project No., C.314.84.10

International Commission on Stratigraphy (ICS)
2018 *International Stratigraphic Chart.* Published by the International Commission on Stratigraphy. July 2018. Website: http://www.stratigraphy.org/index.php/ics-chart-timescale.

Jefferson, George T.
1991a *A Catalogue of Late Quaternary Vertebrates from California: Part One: Non-marine Lower Vertebrate and Avian Taxa.* Natural History Museum of Los Angeles County Technical Reports No. 5, Los Angeles.

1991b *A Catalogue of Late Quaternary Vertebrates from California: Part Two: Mammals.* Natural History Museum of Los Angeles County Technical Reports No. 7, Los Angeles.

Michael Brandman and Associates, Inc.
2010 *Final Environmental Impact Report for the City of Hesperia General Plan Update*. Prepared for the City of Hesperia December 16, 2010.

Miller, W.E.
1971 *Pleistocene Vertebrates of the Los Angeles Basin and Vicinity* (*Exclusive of Rancho La Brea*). Los Angeles County Museum of Natural History Bulletin, Science: No. 10.

Morton, Douglas M., and Fred K. Miller
2006 *Geologic Map of the San Bernardino and Santa Ana 30-minute by 60-minute quadrangles, California*. Digital preparation by Pamela M. Cosette and Kelly R. Bovard. Prepared by the

United States Geological Survey (USGS) in cooperation with the California Geological Survey. USGS Open File Report 2006-1217. Map Scale 1:100,000.

Norris, R.M., and R.W. Webb
1976 *Geology of California*. New York: John Wiley and Sons, Inc. 379 pp.

Reynolds, R.E., and R.L. Reynolds
1991 *The Pleistocene Beneath our Feet: Near-surface Pleistocene Fossils in Inland Southern California Basins*. In M.O. Woodburne, R.E. Reynolds, and D.P. Whistler, eds., Inland Southern California: The Last 70 Million Years, Redlands, San Bernardino County Museum Special Publication 38(3 and 4):41–43.

Sanders, A.E., R.E. Weems, and L.B. Albright
2009 *Formalization of the Middle Pleistocene "Ten Mile Beds" in South Carolina with Evidence for Placement of the Irvingtonian-Rancholabrean Boundary*. Museum of Northern Arizona Bulletin 64:369–375.

Sharp, R.P.
1976 *Geology: Field Guide to Southern California*. Kendall/Hunt Publishing Company, Second Edition: 181.

Society of Vertebrate Paleontology (SVP)
2010 *Standard Procedures for the Assessment and Mitigation of Adverse Impacts to Paleontological Resources.* Society of Vertebrate Paleontology. Impact Mitigation Guidelines Revision Committee. 11 pp.

Springer, Kathleen, Eric Scott, J. Christopher Sagebiel, and Lyndon K. Murray
2009 *The Diamond Valley Lake Local Fauna: Late Pleistocene Vertebrates from Inland Southern California*. In L.B. Albright, III, ed. Papers in Geology, Vertebrate Paleontology, and Biostratigraphy in Honor of Michael O. Woodburne, Museum of Northern Arizona Bulletin 65, pp. 217–236.

United States Geological Survey (USGS)
19980 *Hesperia*, *California* 7.5-minute topographic quadrangle. Published 1956, photorevised 1980. United States Geological Survey, Denver, Colorado.

ATTACHMENT B

FIGURE 1: REGIONAL AND PROJECT LOCATION

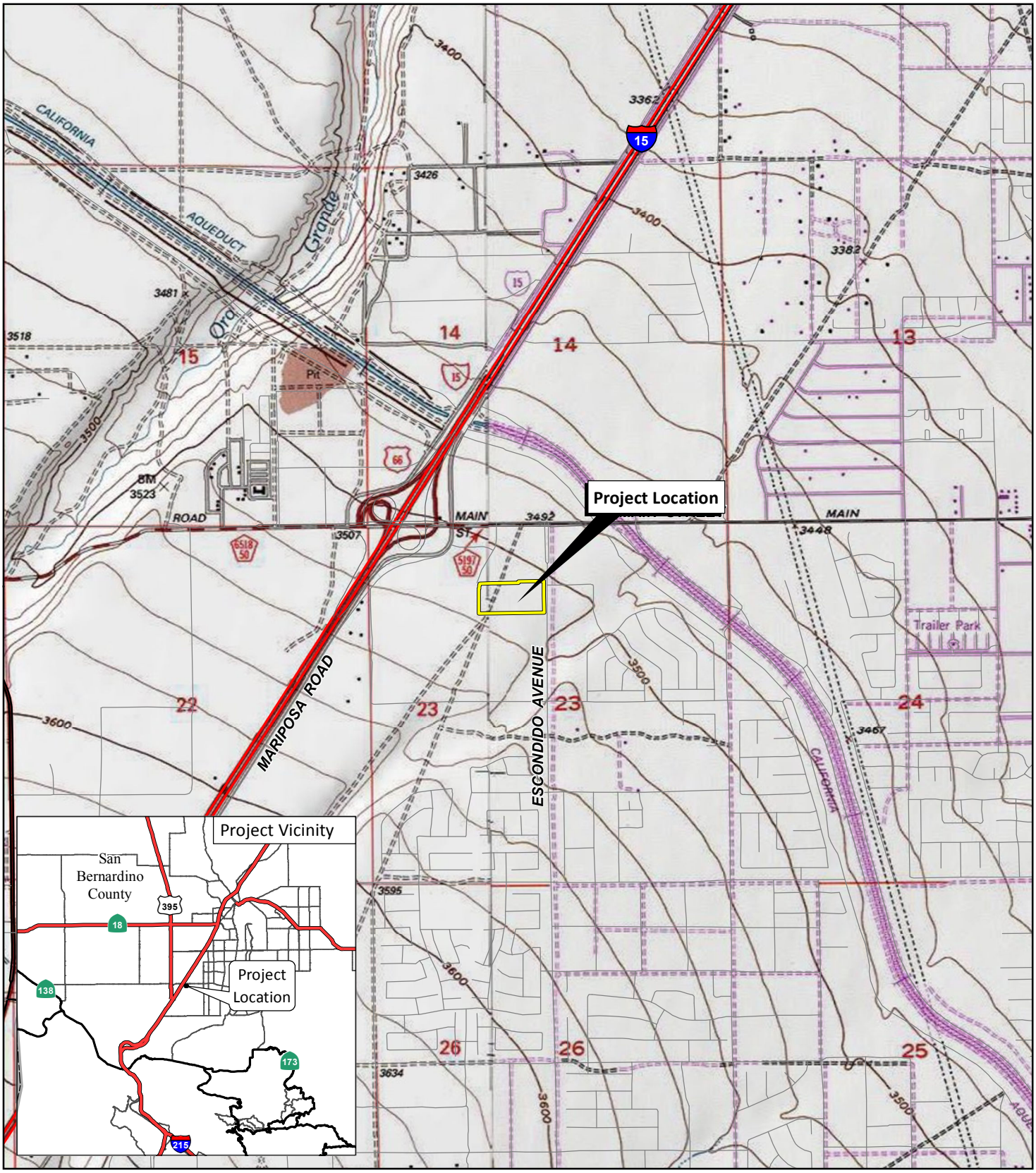

LSA

FIGURE 1

N

0 1000 2000
FEET

Hesperia Kaiser Permanente Medical Office Building

Regional and Project Location

SOURCE: USGS 7.5' Quads: Hesperia, 1980, Baldy Mesa, 1988, CA; ESRI Streetmap, 2013.

I:\KSP1801\Reports\Cultural\fig1_RegLoc.mxd (6/26/2018)

ATTACHMENT C

PALEONTOLOGICAL LOCALITY SEARCH RESULTS FROM THE NATURAL HISTORY MUSEUM OF LOS ANGELES COUNTY

Natural History Museum
of Los Angeles County
900 Exposition Boulevard
Los Angeles, CA 90007

tel 213.763.DINO
www.nhm.org

Vertebrate Paleontology Section
Telephone: (213) 763-3325

e-mail: smcleod@nhm.org

17 July 2018

LSA Associates, Inc.
20 Executive Park, Suite 200
Irvine, California 92614

Attn: Sarah Rieboldt, Ph.D., Senior Paleontological Resources Manager

re: Paleontological Resources Records Check for the proposed Kaiser Permanente Medical Office Building Project, LSA Project # KSP1801, in the City of Hesperia, San Bernardino County, project area

Dear Sarah:

I have thoroughly searched our paleontology collection records for the locality and specimen data for the proposed Kaiser Permanente Medical Office Building Project, LSA Project # KSP1801, in the City of Hesperia, San Bernardino County, project area as outlined on the portion of the Hesperia USGS topographic quadrangle map that you sent to me via e-mail on 3 July 2018. We do not have any vertebrate fossil localities that lie directly within the proposed project area boundaries, but we do have localities nearby from sedimentary deposits similar to those that may occur subsurface in the proposed project area.

Surface deposits in the entire proposed project area consist of younger Quaternary Alluvium, derived as alluvial fan deposits from the San Gabriel Mountains to the south. These deposits typically do not contain significant vertebrate fossils in the uppermost layers, but they may be underlain by older Quaternary deposits that do contain significant vertebrate fossil remains. Our closest fossil vertebrate locality in these older Quaternary deposits is LACM 1224, northeast of the proposed project area west of Spring Valley Lake, that produced a specimen of fossil camel, *Camelops*. Additionally, east-southeast of the proposed project area, on the western side of the Mojave River below the bluffs, an otherwise unrecorded specimen of mammoth was collected in 1961 from older Quaternary Alluvium deposits. Further to the north-northwest of the proposed project area, between Adelanto and the former George Air Force Base, our older Quaternary locality LACM 7786 produced a fossil specimen of meadow vole, *Microtus*.

Shallow excavations in the younger Quaternary Alluvium in the proposed project area are unlikely to produce significant vertebrate fossils. Deeper excavations in the proposed project area that extend down into older Quaternary deposits, however, may well encounter significant fossil vertebrate remains. Any substantial excavations in the proposed project area, therefore, should be monitored closely to quickly and professionally recover any fossil remains discovered while not impeding development. Also, sediment samples should be collected and processed to determine the small fossil potential in the proposed project area. Any fossils recovered during mitigation should be deposited in an accredited and permanent scientific institution for the benefit of current and future generations.

This records search covers only the vertebrate paleontology records of the Natural History Museum of Los Angeles County. It is not intended to be a thorough paleontological survey of the proposed project area covering other institutional records, a literature survey, or any potential on-site survey.

Sincerely,

Samuel A. McLeod

Samuel A. McLeod, Ph.D.
Vertebrate Paleontology

enclosure: invoice

City of Hesperia
Regulated Project
Water Quality Management Plan

For:

Kaiser Hesperia

APN: 3057-011-22, 3057-011-23, 3057-011-24, 3057-011-25, 3057-011-26

Prepared for:

Kaiser Permanente Health Plans, Inc.

14520 Hawthorne Avenue

Fontana, CA 92335

(909) 427-4150

Prepared by:

Fuscoe Engineering, Inc.

2850 Inland Empire Boulevard, Suite B

Ontario, CA 91764

(909) 581-0676

Submittal Date: 9/7/2018

Revision No. and Date: Insert No and Current Revision Date

Revision No. and Date: Insert No and Current Revision Date

Revision No. and Date: Insert No and Current Revision Date

Revision No. and Date: Insert No and Current Revision Date

Final Approval Date:_____

October 2017

Project WQMP Selection Diagram

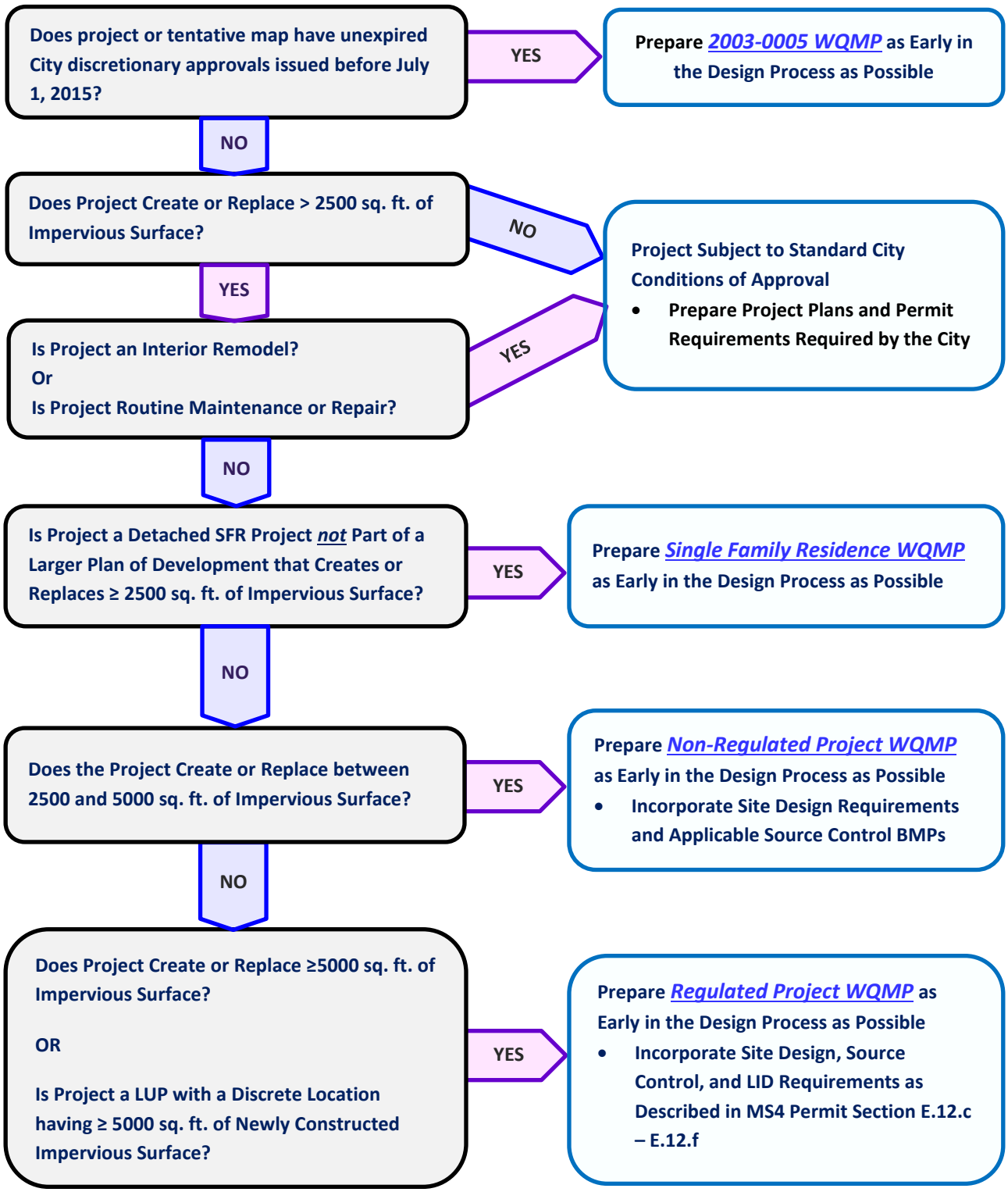

Project Owner's Certification

This WQMP has been prepared for Kaiser Permanente Health Plans, Inc. by Fuscoe Engineering, Inc. The WQMP includes requirements of the Phase II Small MS4 NPDES General Permit (Water Quality Order 2013-0001) (MS4 Permit) and the City of Hesperia (City). The undersigned, while it owns the subject property, shall implement the provisions of this plan and shall ensure that this WQMP is amended as appropriate to reflect up-to-date conditions on the site consistent with the MS4 Permit. Once the undersigned transfers its interest in the property, its successors in interest and the City shall be notified of the transfer. The new owner shall implement the provisions of this plan and shall ensure that this WQMP is amended as appropriate to reflect up-to-date conditions on the site consistent with the MS4 Permit. A copy of the approved WQMP shall be available on the subject site in perpetuity.

"I certify under a penalty of law that the provisions (implementation, operation, maintenance, and funding) of the WQMP have been accepted and that the plan will be transferred to future successors."

Project Data			
Permit/Application Number(s):		Grading Permit Number(s):	
Tract/Parcel Map Number(s):	3057-011-22, 3057-011-23, 3057-011-24, 3057-011-25, 3057-011-26	Building Permit Number(s):	
CUP, SUP, and/or APN (Specify Lot Numbers if Portions of Tract):			

Owner's Signature		
Owner Name:		
Title		
Company	Kaiser Permanente Health Plans, Inc.	
Address	14520 Hawthorne Avenue, Fontana, CA 92335	
Email		
Telephone #	(909) 427-4150	
Signature	Date	

WQMP Preparer's Certification

Project Data			
Permit/Application Number(s):		Grading Permit Number(s):	
Tract/Parcel Map Number(s):	3057-011-22, 3057-011-23, 3057-011-24, 3057-011-25, 3057-011-26	Building Permit Number(s):	
CUP, SUP, and/or APN (Specify Lot Numbers if Portions of Tract):			

"The selection, sizing and design of stormwater treatment and other stormwater quality and quantity control measures in this plan were prepared under my oversight and meet the requirements of the California State Water Resources Control Board Order No. 2013-0001-DWQ."

Engineer: Steve Ellis		PE Stamp Below
Title	Principal	
Company	Fuscoe Engineering, Inc.	
Address	2850 Inland Empire Boulevard, Ontario, CA 91764	
Email	sellis@fuscoe.com	
Telephone #	(909) 581-0676	
Signature		
Date		

Table of Contents

Section I Introduction

Section 1 Permit(s) and Project Information 1-1

Section 2 Project Description 2-1

2.1 Project Information 2-1
2.2 Property Ownership / Management 2-2
2.3 Potential Stormwater Pollutants 2-3

Section 3 Site and Watershed Description 3-1

Section 4 Best Management Practices 4-1

4.1 Source Control and Site Design BMPs 4-1
4.1.1 Site Assessment Measures 4-1
4.1.2 Site Design Measures 4-1
4.1.3 Source Control BMPs 4-4
4.2 Treatment BMPs 4-9
4.3 BMP Selection and Sizing 4-11
4.3.2 Site Design BMP 4-12
4.3.3 Infiltration BMP 4-14
4.3.4 Biotreatment BMP 4-16
4.3.5 Conformance Summary 4-20

Section 5 Inspection & Maintenance Responsibility Post Construction BMPs 5-1

Section 6 WQMP Attachments 6-1

6.1 BMP Exhibit (Site Plan) 6-1
6.2 Operation and Maintenance Plan 6-1
6.3 Electronic Data Submittal 6-2
6.4 Maintenance Agreement 6-2
6.5 Other Supporting Documentation 6-2
6.6 Submittal and Recordation of the WQMP 6-2

Forms

Form 1-1 Project Information 1-1
Form 2.1-1 Description of Proposed Project 2-1
Form 2.2-1 Property Ownership/Management 2-2
Form 2.3-1 Pollutants of Concern 2-3
Form 3-1 Hydrologic Characteristics 3-3
Form 3-2 Watershed Description 3-4
Form 3-3 Watershed Description for Drainage Area 3-5
Form 4.1-1 Site Assessment Checklist 4-2
Form 4.1-2 Site Design Measures Checklist 4-3
Form 4.1-3 Non-Structural Source Control BMP 4-5
Form 4.1-4 Structural Source Control BMP 4-7
Form 4.2-1 LID BMP Performance Criteria 4-11
Form 4.3-1 Site Design BMPs Infiltration LID BMP 4-13
Form 4.3-2 Infiltration LID BMP 4-15
Form 4.3-3 Selection and Evaluation of Biotreatment BMP 4-16

Form 4.3-4 Volume Based Biotreatment–Bioretention and Planter Boxes with Underdrains 4-17
Form 4.3-5 Volume Based Biotreatment--Extended Detention 4-18
Form 4.3-6 Flow Based Biotreatment..... 4-19
Form 4.3-7 Conformance Summary and Alternative Compliance Volume Estimate 4-20
Form 5-1 BMP Inspection and Maintenance..... 5-1

Insert Appendix Title if Applicable - Otherwise, please delete text

Insert Appendix Title if Applicable - Otherwise, please delete text

Insert Appendix Title if Applicable - Otherwise, please delete text

Insert Appendix Title if Applicable - Otherwise, please delete text

Section I Introduction

This WQMP template has been prepared specifically to implement requirements of the Phase II Small MS4 NPDES General Permit; Water Quality Order 2013-0001 (MS4 Permit). This location is within the jurisdiction of the Lahontan Regional Water Quality Control Board (LRWQCB). This document should not be confused with the City of Hesperia Non-Regulated Project WQMP Template or the 2003-0005 WQMP Template.

Section 1 Permit(s) and Project Information

Form 1-1 Project Information					
Project Name	Kaiser Hesperia				
Project Owner Contact Name:					
Mailing Address:	14520 Hawthorne Avenue, Fontana, Ca 92355	E-mail Address:		Telephone:	(909) 427-4150
Permit/Application Number(s): (Obtain from City staff)		Tract/Parcel Map Number(s):	3057-011-22, 3057-011-23, 3057-011-24, 3057-011-25, 3057-011-26		
Additional Information/ Comments:					
Site coordinates *take GPS measurement at approximate center of site*	Latitude 34°25'24.57"	Longitude 117°22'27.91"	Thomas Bros Map page 4475		
Provide summary of WQMP conditions					

Section 2 Project Description

2.1 Project Information

The WQMP requires Project information needed to determine the applicable development category, pollutants of concern, watershed description, and long term maintenance responsibilities for the project. This information will be used in conjunction with the information in Section 3, Site Description, to establish the performance criteria and Section 4, to select the LID BMP or other BMP for the project.

2.1.1 Project Sizing Categorization

Projects that create and/or replace ≥ 5,000 square feet of impervious surface are Regulated Projects.

Form 2.1-1 Description of Proposed Project					
1 Development Project Category (Select all that apply):					
☒ **#1:** New development involving the creation or replacement of 5,000 sq. ft. or more of impervious surface collectively over entire site	☐ **#2:** Significant re-development involving the creation or replacement of 5,000 sq. ft. or more of impervious surface on an already developed site	☐ **#3:** Road Project – any road, sidewalk, or bicycle lane project that creates 5,000 sq. ft. or more of newly constructed contiguous impervious surface	☐ **#4:** LUPs – linear underground/overhead projects that has a discrete location with 5,000 sq. ft. or more newly constructed contiguous impervious surface		
☐ **#5:** Non-Regulated Project (Project Total Impervious Area Square Feet > 2,500 but < 5,000 sq.) ***Do not use this WQMP Template.*** *Use the "Non-Regulated Project WQMP" Template.*					
2 Total Project Impervious Area (sq. ft.):	228,155	**3** Number of Dwelling Units:	0	**4** SIC Code:	6324
5 Is Project going to be phased? Yes ☐ No ☒ *If yes, ensure that the WQMP evaluates each phase as a distinct DMA, requiring LID BMPs to address runoff at time of completion.*					

2.2 Property Ownership/Management

Describe the ownership/management of all portions of the project and site. State whether any infrastructure will transfer to public agencies (City, County, Caltrans, etc.) after project completion. State if a homeowners or property owners association will be formed and be responsible for the long-term maintenance of project stormwater facilities. Describe any lot-level stormwater features that will be the responsibility of individual property owners.

Form 2.2-1 Property Ownership/Management
Describe property ownership/management responsible for long-term maintenance of WQMP stormwater facilities: Kaiser Permanente Health Plans, Inc.
Describe any infrastructure that will transfer to a public agency: ☒ N/A
Will a property owners association be responsible for long-term BMP maintenance? ☐Yes ☒No If yes, list association and BMPs to be maintained.
Describe lot-level features that will be maintained by individual property owners: ☒ N/A

2.3 Potential Stormwater Pollutants

BMPs for pollutant-generating activities and sources shall be designed consistent with recommendations from the CASQA Stormwater BMP Handbook for New Development and Redevelopment (or equivalent manual or resource if recommended by the City).

Complete Form 2.3-1: determine and describe expected stormwater pollutants of concern based on land uses and site activities using Table 2-1, below.

Form 2.3-1 Pollutants of Concern			
Pollutant	Please check: E=Expected, N=Not Expected		Additional Information and Comments
Pathogens (Bacterial / Virus)	E ☐	N ☒	
Nutrients - Phosphorous	E ☒	N ☐	
Nutrients - Nitrogen	E ☒	N ☐	
Sediment	E ☒	N ☐	
Metals	E ☐	N ☒	
Oil and Grease	E ☒	N ☐	
Trash/Debris	E ☒	N ☐	
Pesticides / Herbicides	E ☒	N ☐	
Organic Compounds	E ☒	N ☐	
Other:	E ☐	N ☐	
Other:	E ☐	N ☐	
Other:	E ☐	N ☐	

Table 2-1: Pollutants of Concern for Project Categories and Land Uses

Regulated Project Categories and/or Project Features	General Pollutant Categories							
	Pathogen Indicators (Bacterial / Virus)	Metals	Nutrients	Toxic Organic Compounds	Pesticides / Herbicides	Sediments / Total Suspended Solids	Trash & Debris	Oil & Grease
Detached Residential Development	E	N	E	N	E	E	E	E
Attached Residential Development	E	N	E	N	E	E	E	E(2)
Commercial / Industrial Development	E(3)	E(5)	E(1)	E	E(1)	E(1)	E	E
Automotive Repair Shops	N	E	N	E	N	N	E	E
Restaurants	E	E(2)	E(1)	N	E(1)	E(1)(2)	E	E
Hillside Development (>5,000 ft^2)	E	N	E	N	E	E	E	E
Streets and Parking Lots (>5,000 ft^2)	E(4)	E	E(1)	E	E(1)	E	E	E
Retail Gasoline Outlets	N	E	N	E	N	N	E	E

E = Expected to be a concern in stormwater runoff
N = Not expected to be a concern in stormwater runoff
(1) Expected pollutant if landscaping or open area is present on site, otherwise not expected.
(2) Expected pollutant if the project includes uncovered parking areas, otherwise not expected.
(3) Expected pollutant if land use involves food or animal waste products, otherwise not expected.
(4) Bacterial indicators are routinely detected in pavement runoff.

(5) Expected pollutant if outdoor storage or metal roofs, otherwise not expected.

Section 3 Site and Watershed Description

Describe and evaluate the physical conditions and limitations of the site and its receiving waters to determine the applicability of potential BMPs. Provide a Site Map which shows how the developed portions of the project site are divided into discrete Drainage Management Areas (DMAs)[1]; in order to manage runoff from each DMA using Site Design Measures, Source Controls and/or Storm Water Treatment and Baseline Hydromodification Measures[2]. Complete Form 3.1 for each DMA on the project site-use extra form copies as needed. Complete Form 3-2 to describe the watershed attributes for the project site. Use additional copies of Form 3-2 if needed for different DMAs.

Provide the following information in the Project Description:

- For the entire parcel, list and describe the proposed land uses, the area of each land use, and the estimated imperviousness for each land use.
- List and show on the Site Map where facilities will be located and what activities will be conducted:
  - List what kinds of materials and products will be used (if known), how and where materials will be received and stored (if applicable), and what kinds of wastes will be generated (if any).
  - Describe all paved areas, including the type of parking areas.
  - Describe all landscaped areas and open space areas (if any).
- For commercial and industrial projects:
  - Provide the Standard Industrial Classification (SIC) Code which best describes the facilities operations.
  - Describe the type of use (or uses) for each building or tenant space (if known).
  - If the project includes food preparation, cooking, and eating areas, specify the location and type of area.
  - Describe delivery areas and loading docks (specify location, design, if below grade, and types of materials expected to be transferred).
  - Describe outdoor materials storage areas (describe and depict location(s), specify type(s) of materials expected to be stored).
  - Describe activities that will be routinely conducted outdoors.
  - Describe any activities associated with equipment or vehicle maintenance and repair, including washing or cleaning.
  - Indicate the number of service bays or number of fueling islands/fuel pumps, if applicable.

[1] DMAs on the Site Map should be consistent with DMAs as described in text and tables

[2] Hydromodification controls apply only to projects that create or replace ≥ 1-acre of impervious area. In addition, the hydromodification requirement is met for projects which comply with Onsite Drainage Impact Prevention conditions to control peak discharge for the 10-year, 24-hour storm event.

- **Provide Detailed Narrative Project Description (including Project areas; Land uses; Land cover; and Design elements):**

  The proposed land use for this project is commercial with a total project area of 266,871 square feet. It is estimated that 228,155 square feet will be impervious which will yield a 85% impervious ratio. The parcel will consist of the main building, parking and landscaped areas. The main building is about 25,800 square feet with an adjacent parking lot that will accommodate 273 vehicles. Landscape will surround the building, parking lot, and walkways. The SIC code for the proposed building is 6324 which designates a building in which medical services will be administered. In order to treat the volume necessary due to LID and Hydromod requirements, a drywell located on the northwest side of the project and an underground infiltration chamber located on the northeast side of the project. The drywell will be the recipient of the stormwater runoff for about 24,600 square feet of project area while the remainder of the stormwater runoff for the site will be routed to the underground infiltration chamber.

- **Provide a site map showing the Drainage Management Area(s) as described above, showing drainage pathways and the proposed site design, source control, LID, and/or Storm Water Treatment BMPs. Also show any subareas within the DMAs.**

  The comprehensive Site Map required for Section 6 can be used here.

  Click here to enter text.

Form 3-1: Existing Hydrologic Characteristics for Drainage Area 1[3]				
For sub-watershed DMAs within Drainage Area 1, provide the following information:	DMA A	DMA B	DMA C	DMA D
[1] DMA drainage area (ft^2)	266,871			
[2] Existing site impervious area (ft^2)	0			
[3] Antecedent moisture condition *For desert areas, use http://www.sbcounty.gov/dpw/floodcontrol/pdf/20100412_map.pdf*	1.2371			
[4] Hydrologic soil group *Refer to County Hydrology Manual Addendum for Arid Regions – http://www.sbcounty.gov/dpw/floodcontrol/pdf/20100412_addendum.pdf*	D			
[5] Longest flowpath length (ft)	680			
[6] Longest flowpath slope (ft/ft)	.0625			
[7] Current land cover type(s) *Select from Fig C-3 of Hydrology Manual*				
8 Pre-developed pervious area condition: *Based on the extent of wet season vegetated cover: good >75%; Fair 50-75%; Poor <50%* ***Attach photos of site to support rating***				

[3] Add additional sheets as needed.

Attach Photo(s) here

Add sheets as needed here

Click here to enter text.

Site Characteristics

Fill out table with relevant information and include information regarding BMP sizing, suitability, and feasibility, as applicable.

Form 3-2 Site Characteristics	
Precipitation Zone	
Topography	Existing topography slopes downward to the north-east.
Drainage Patterns/Connections	Stormwater runoff travels north on Escondido Avenue by way of curb and gutter. No underground storm drain is avaliable for connection.
Soil Type, Geology, and Infiltration Properties	Soil Class A, Silty Sand Infiltration Rate: 3.8 in./hr.
Hydrogeologic (Groundwater) Conditions	500' below the surface
Geotechnical Conditions (relevant to infiltration)	Silty Sand with high infiltration rates
Off-Site Drainage	Site receives off-site drainage from the south-west.
Utility and Infrastructure Information	No underground storm drain available for connection. All flow must be infiltrated or released to the curb and gutter along the existing street.

Watershed Description

Fill out table: indicate the Receiving Waters and any Environmentally Sensitive Areas.

Form 3-3 Watershed Description for Drainage Area				
Receiving waters	**X**	**Check One**	**Distance from Project**	**Direction**
	☐	Mojave River		
	☐	Antelope Valley Wash		
	☒	Oro Grande Wash	7.89 mi	East
	☐	Unnamed Wash		
	☐	MPD Drainage Channel		
Applicable TMDLs *http://www.waterboards.ca.gov/water_issues/programs/tmdl/integrated2010.shtml*	**None**			
303(d) listed impairments *http://www.waterboards.ca.gov/water_issues/programs/tmdl/integrated2010.shtml*	**Mojave River** Mojave Forks Reservoir Outlet to Upper Narrows: • Fluoride Upper Narrows to Lower Narrows: • Fluoride • Sulfates • Total Dissolved Solids			
Environmentally Sensitive Areas (ESA) (habitat, plant/animal species) *Refer to Watershed Mapping Tool – http://sbcounty.permitrack.com/WAP,* Or other reference relevant to the Mojave River Watershed; such areas may fall under the jurisdiction of other resource agencies	Desert Tortoise Habitat			

Section 4 Best Management Practices (BMP)

4.1 Site Assessment, Site Design Measures, and Source Control BMPs

Regulated Projects shall conduct a Site Assessment, implement Site Design measures, and implement Source Control BMPs that address site-specific pollutant sources.

4.1.1 Site Assessment

Fill out Form 4.1-1 to show the assessment of how Project site conditions such as soils, vegetation, and flowpaths influence the placement of buildings and paved surfaces at the project, to facilitate capture and treatment of runoff. Regulated Projects must evaluate site conditions and must consider optimizing overall site design using the methods in Form 4.1-1. Use as much space as needed for complete explanation.

4.1.2 Site Design Measures

Use Form 4.1-2 to identify site design measures to reduce runoff generation and reduce the required Design Capture Volume; based on the objective of achieving infiltration, evapotranspiration and/or harvesting/reuse of the 85th percentile 24-hour storm runoff event. Site design measures shall be used to reduce the amount of runoff, to the extent technically feasible, for which retention and runoff is required. Describe the site design measures and drainage plan for each Drainage Management Area in the following Forms, including:

- A narrative of site design measures utilized or rationale for not using practices
- A narrative of how site plan incorporates preventive site design measures
- Include an attached Site Plan layout which shows how preventive site design measures are included in the WQMP
- Provide specific information for each site design measure as it applies to the project
- An explanation of how Site Design practices are incorporated into the project or a rationale for not incorporating them into the project

Form 4.1-1: Site Assessment Checklist

Site Assessment

For site assessment elements below: if yes, explain how preventive site design practices are addressed in project site plan. If no, explain why not included in the project and select other LID BMPs as needed to meet volume or flow design requirements

Define the development envelope and protected areas, identifying areas that are most suitable for development and areas to be left undisturbed:

Yes ☐ No ☒

Explanation: There are no areas left to be undisturbed within the site boundaries.

Concentrate development on portions of the site with less permeable soils and preserve areas that can promote infiltration:

Yes ☒ No ☐

Explanation: The majority of the site features very permeable soil with a high infiltration rate.

Limit overall impervious coverage of the site with paving and roofs:

Yes ☐ No ☐

Explanation:

Preserve significant trees:

Yes ☐ No ☒

Tree Planting and Preservation - planting and preservation of healthy, established trees that include both evergreens and deciduous, as applicable.

Explanation:

Conform the site layout along natural landforms:

Yes ☒ No ☐

Explanation: The existing drainage pattern is

Avoid excessive grading and disturbance of vegetation and soils:

Yes ☒ No ☐

Explanation: proposed grades were kept as close as possible to the existing surface elevations.

Replicate the site's natural drainage patterns:

Yes ☒ No ☐

Explanation: Site maintains a north-east drainage direction to match existing condition.

Detain and retain runoff throughout the site:

Yes ☒ No ☐

Explanation:

Stake off areas that will be used for landscaping to minimize compaction during construction:

Yes ☐ No ☐

Explanation:

Add any additional information or tables here

Click here to enter text.

Form 4.1-2: Site Design Measures Checklist

Site Design Measures

For site design elements below: if yes, explain how site design practices are addressed in project site plan. If no, explain why not included in the project and select other LID BMPs as needed to meet volume or flow design requirements

Set back development from creeks or washes, wetlands, and riparian habitats:
Yes ☐ No ☒
A vegetated area including trees, shrubs, and herbaceous vegetation that exists or is established to protect a stream system, lake reservoir, or coastal estuarine area.

Explanation: Not located near natural drainage feature.

Soil Quality Improvement and Maintenance - improvement and maintenance of soil through soil amendments and creation of microbial community:
Yes ☐ No ☐
Explanation:

Rooftop and Impervious Area Disconnection (Impervious Area Dispersion: HSC-2) - rerouting of rooftop drainage pipes to engineered permeable/bioretention areas instead of the storm sewer:
Yes ☒ No ☐
Explanation:

Porous Pavement - pavement that allows runoff to pass through it, thereby reducing the runoff from a site and surrounding areas and filtering pollutants:
Yes ☐ No ☐
Explanation:

Engineered Arid-Region Rock Swales or Vegetated Swales (bioretention/biofiltration) – a vegetated or rock-lined, open-channel management practice designed to treat and attenuate stormwater runoff:
Yes ☐ No ☐
Explanation:

Rain Barrels and Cisterns – system that collects and stores stormwater runoff from a roof or other impervious surface:
Yes ☐ No ☒
Explanation: Stormwater runoff will be routed to other BMP.

Add any additional information or tables here

Click here to enter text.

The MS4 Permit (Section E.12.b) requires consideration of cisterns and green roofs. However, these BMPs are typically not practical in this region. Engineered vegetated swales may be used provided measures are taken to maximize the amount of drought tolerant vegetation. The project proponent should use locally recommended vegetation types for landscaping which can be found in the following references:

City of Hesperia:

Approved Plant List - http://www.cityofhesperia.us/DocumentCenter/Home/View/384

San Bernardino County Special Districts:

Guide to High Desert Landscaping - http://www.specialdistricts.org/Modules/ShowDocument.aspx?documentid=795

Recommended High-Desert Plants - http://www.specialdistricts.org/modules/showdocument.aspx?documentid=553

Mojave Water Agency:

Desert Ranch: http://www.mojavewater.org/files/desertranchgardenprototype.pdf

Summertree: http://www.mojavewater.org/files/Summertree-Native-Plant-Brochure.pdf

Thornless Garden: http://www.mojavewater.org/files/thornlessgardenprototype.pdf

Mediterranean Garden: http://www.mojavewater.org/files/mediterraneangardenprototype.pdf

Lush and Efficient Garden: http://www.mojavewater.org/files/lushandefficientgardenprototype.pdf

Alliance for Water Awareness and Conservation (AWAC) outdoor tips – http://hdawac.org/save-outdoors.html

4.1.3 Source Control BMPs

Non-structural and structural source control BMPs are required for all Regulated Projects. Complete Forms 4.1-3 and 4.1-4 to describe specific source control BMPs which are required to be used in the WQMP or to explain why a certain source-control BMP is not applicable. All source control BMPs must be implemented for projects with the respective specific types of potential pollutant sources or activities.

The identified list of source control BMPs corresponds to the CASQA Stormwater BMP Handbook for New Development and Redevelopment.

Form 4.1-3 Non-Structural Source Control BMPs

Identifier	Name	Check One		If not applicable, state reason
		Included	Not Applicable	
N1	Education of Property Owners, Tenants and Occupants on Stormwater BMPs	☒	☐	
N2	Activity Restrictions	☒	☐	
N3	Landscape Management BMPs	☒	☐	
N4	BMP Maintenance	☒	☐	
N5	Title 22 CCR Compliance (How development will comply)	☐	☒	
N7	Spill Contingency Plan	☐	☒	
N8	Underground Storage Tank Compliance	☒	☐	
N9	Hazardous Materials Disclosure Compliance	☐	☒	

Form 4.1-3 Non-Structural Source Control BMPs

Identifier	Name	Check One		If not applicable, state reason
		Included	Not Applicable	
N10	Uniform Fire Code Implementation	☐	☐	
N11	Litter/Debris Control Program	☒	☐	
N12	Employee Training	☒	☐	
N13	Housekeeping of Loading Docks	☐	☒	No loading docks proposed on the site.
N14	Catch Basin Inspection Program	☒	☐	
N15	Vacuum Sweeping of Private Streets and Parking Lots	☒	☐	
N16	Other Non-structural Measures for Public Agency Projects	☐	☐	

Form 4.1-4 Structural Source Control BMPs

Identifier	Name	Check One		If not applicable, state reason
		Included	Not Applicable	
S1	Provide storm drain system stencilling and signage (CASQA New Development BMP Handbook SD-13)	☒	☐	
S2	Design and construct outdoor material storage areas to reduce pollution introduction (CASQA New Development BMP Handbook SD-34)	☐	☒	
S3	Design and construct trash and waste storage areas to reduce pollution introduction (CASQA New Development BMP Handbook SD-32)	☐	☐	
S4	Use efficient irrigation systems & landscape design, water conservation, smart controllers, and source control (Statewide Model Landscape Ordinance; CASQA New Development BMP Handbook SD-12)	☐	☐	
S5	Finish grade of landscaped areas at a minimum of 1-2 inches below top of curb, sidewalk, or pavement	☐	☐	
S6	Protect slopes and channels and provide energy dissipation (CASQA New Development BMP Handbook SD-10)	☐	☐	
S7	Covered dock areas (CASQA New Development BMP Handbook SD-31)	☐	☒	
S8	Covered maintenance bays with spill containment plans (CASQA New Development BMP Handbook SD-31)	☐	☒	
S9	Vehicle wash areas with spill containment plans (CASQA New Development BMP Handbook SD-33)	☐	☒	
S10	Covered outdoor processing areas (CASQA New Development BMP Handbook SD-36)	☐	☒	

Form 4.1-4 Structural Source Control BMPs

Identifier	Name	Check One		If not applicable, state reason
		Included	Not Applicable	
S11	Equipment wash areas with spill containment plans (CASQA New Development BMP Handbook SD-33)	☐	☒	
S12	Fueling areas (CASQA New Development BMP Handbook SD-30)	☐	☒	
S13	Hillside landscaping (CASQA New Development BMP Handbook SD-10)	☐	☒	
S14	Wash water control for food preparation areas	☐	☒	
S15	Community car wash racks (CASQA New Development BMP Handbook SD-33)	☐	☒	

4.2 Treatment BMPs

All site runoff from impervious areas must be addressed by onsite treatment BMPs. Any runoff from areas within DMAs that is not addressed by proposed Site Design measures and Source Control BMPs must be directed to one or more onsite BMPs designed to infiltrate, evapotranspire, and/or bioretain the design capture volume as specified in 4.2.1.1, which include:

Infiltration/Bioretention BMPs

- Bioretention: Basin; Rain Garden; Linear Landscape Area; Planter Box
- Infiltration: Basin; Trench; Rock Landscape Feature; Pervious Pavement/Pavers

The BMPs must be demonstrated to be at least as effective as a bioretention system with the following design parameters:

1) Maximum surface loading rate of 5 inches per hour, based on the flow rates calculated. A sizing factor of 4% of tributary impervious area may be used.

2) Minimum surface reservoir volume equal to surface area times a depth of 6 inches.

3) Minimum planting medium depth of 18 inches. The planting medium must sustain a minimum infiltration rate of 5 inches per hour throughout the life of the project and must maximize runoff retention and pollutant removal. A mixture of sand (60%-70%) meeting the specifications of American Society for Testing and Materials (ASTM) C33 and compost (30%-40%) may be used.

4) Subsurface drainage/storage (gravel: Class 2 permeable material) layer with an area equal to the surface area and having a minimum depth of 12 inches.

5) Underdrain with discharge elevation at top of gravel layer. Underdrain is optional for Class A and B soils.

6) No compaction of soils beneath the facility, or ripping/loosening of soils if compacted.

7) No liners or other barriers interfering with infiltration.

8) Appropriate plant palette per resources in section 4.1.2, above.

All BMPs must include pretreatment features recommended in CASQA Handbooks or equivalent guidance.

If the Project Engineer determines that it is infeasible to infiltrate, evapotranspire, and/or bioretain the entire design capture volume, alternate treatment BMPs may be proposed to address any remaining portion of the DCV. Subject to City approval of any Project BMP infeasibility determination, the following BMPs may be considered:

Biotreatment/Treatment BMPs

- Biofiltration: Bioretention/Planterbox with Underdrain
- Filtration: Vegetated Buffer/Filter Strip; Swale; Trench with Underdrain

- Settling/Sedimentation: Detention Basin; Extended Detention Basin
- Other BMP designs subject to City approval

BMP designs must be consistent with the most current version of the following Guidance Resources:

- CASQA Stormwater BMP Handbook for New Development and Redevelopment
- Riverside County Design Handbook for Low Impact Development Best Management Practices: http://www.floodcontrol.co.riverside.ca.us/NPDES/LIDBMP.aspx

BMPs must be sized using the methods in this WQMP Template.

If the project has more than one outlet for stormwater runoff, then complete additional versions of these forms for each DMA / outlet.

4.2.1 Project Specific Hydrology Characterization[4]

The Project WQMP must meet the performance standards for post-development hydrology as specified in Section E.12.e.ii.c of the MS4 Permit. These standards include runoff volume and flow rates for water quality control (referred to as LID design capture volume and design flow rates).

4.2.1.1 Hydromodification Standard

Projects which create and/or replace one acre or more of impervious surface shall demonstrate that the project meets the required hydromodification performance standard:

Post-project runoff shall not exceed estimated pre-project flow rate for the 10-year, 24-hour storm.

Methods include:

4.2.1.2 Volume-Based Design Standard

For LID BMP Design Capture Volume (DCV), use the P_6 method (Form 4.2-1). For pre- and post-development hydrologic calculation, use methods in the San Bernardino Hydrology Manual: the Rational Method approach for projects ≤ 640 acres; for projects greater than 640 acres (1.0 mi^2), the Unit Hydrograph Method (San Bernardino County Hydrology Manual Section E) shall be used.

[4] Projects will also be required to comply with City flood protection requirements for Onsite and Offsite Drainage Impact Mitigation.

Form 4.2-1 LID BMP Performance Criteria for Design Capture Volume		
① Project area (for DMA) (ft^2): 266871	② Imperviousness after applying preventative site design practices (Imp %): 85	③ Runoff Coefficient (Rc): _0.7150 *$R_c = 0.858(Imp\%)^3-0.78(Imp\%)^2+0.774(Imp\%)+0.04$*
④ Determine 1-hour rainfall depth for a 2-year return period $P_{2yr-1hr}$ (in): 0.441 http://hdsc.nws.noaa.gov/hdsc/pfds/sa/sca_pfds.html		
⑤ Compute P_6, Mean 6-hr Precipitation (inches): 0.5456 *P_6 = Item 4 *C_1, where C_1 = 1.2371*		
⑥ Drawdown Rate *Use 24 hours as the default condition.*		24-hrs ☐ 48-hrs ☒
⑦ Compute design capture volume, DCV (ft^3): 15,904 *DCV = 1/12 * [Item 1* Item 3 *Item 5 * C_2], where C_2 is a function of drawdown rate (24-hr = 1.582; 48-hr = 1.963)* *Compute separate DCV for each outlet from the project site per site map from Form 3-1*		

Add any additional information or tables here

Show calculations in detail - attach a separate sheet of calculations and a table that summarizes the sizing parameters including size of impervious areas, relevant hydrologic characteristics, and design capture volume (s) for each BMP and contributing drainage management area, and demonstrates that the design criteria have been satisfied.

Retention volumes provided by implementation of site design measures can be credited to offset a portion of the required onsite LID Design Capture Volume.

Any proposed retention/detention basins or underground systems must be reviewed and approved by the City Engineer. The proposed design shall meet City Standards and design criteria established by the City Engineer. A soils percolation test will be required for all onsite retention systems, using methods in Appendix A of the Riverside County Design Handbook for Low Impact Development Best Management Practices; available online at: http://www.floodcontrol.co.riverside.ca.us/NPDES/LIDBMP.aspx

4.2.1.3 Flow Based Design Standard

Flow-based BMPs should be designed and sized to provide treatment for the estimated range of flow rates expected from the DMA for the BMP. Calculate the target BMP flow rate, Q, using the formula:

Q = C* I * A

Where: **Q** = flow in $ft.^3/s$

I = rainfall intensity = 0.2 inches/hour[1]

A = Drainage Area in acres

C = composite runoff coefficient for the DMA

[1] Use the default value of I = 0.2 inches/hour; or use project-specific I-value that will ensure flow-based BMPs will effectively treat (or pre-treat) flows prior to discharge into onsite retention BMP(s) which must meet volume retention standard provided in 4.2.1.1.

Show calculations in detail - attach a separate sheet of calculations and a table that summarizes the sizing parameters including size of impervious areas, relevant hydrologic characteristics, and design flow rate (s) for each BMP and contributing drainage management area, and demonstrates that the design criteria have been satisfied.

4.3 BMP Selection and Sizing

Complete the following forms for each project site DMA to document that the proposed treatment (LID/Infiltration/Bioretention) BMPs conform to the project DCV. Use additional form sheets as necessary to describe the entire site. The forms help compute the following for onsite LID BMPs:

- Site Design BMPs (Form 4.3-1)
- Retention and Infiltration BMPs (Form 4.3-3) or
- Biotreatment BMPs (Form 4.3-4).

At the end of each form, additional fields facilitate the determination of the extent of mitigation provided by the specific BMP category, allowing for use of the next category of BMP in the hierarchy, if necessary.

Complete Form 4.3-1 to determine the feasibility of applicable Site Design BMPs, and, if their implementation is feasible, the extent of mitigation of the DCV.

Evaluate the use of combinations of LID BMPs, including all applicable Site Design BMPs, to maximize on-site retention of the DCV.

4.3.1 Site Design BMP

The MS4 Permit (Section E.12.e) emphasizes the use of LID preventive measures. Site design measures shall be used to reduce the amount of runoff, to the extent technically feasible, for which retention and runoff is required. Therefore, all applicable Site Design Measures shall be provided except where they are mutually exclusive with each other, or with other BMPs. Mutual exclusivity may result from overlapping BMP footprints such that either would be potentially feasible by itself, but both could not be implemented. Please note that while there are no numeric standards regarding the use of Site Design BMPs; if a project cannot feasibly meet BMP sizing requirements overall or cannot fully address hydromodification, then the feasibility of all applicable Site Design BMPs must be evaluated as part of demonstrating that the BMP system has been designed to retain the maximum feasible portion of the DCV. Complete Form 4.3-1 to identify and calculate estimated retention volume from implementing site design BMP.

Form 4.3-1 Site Design BMPs

1 Implementation of Impervious Area Dispersion BMP (i.e. routing runoff from impervious to pervious areas), excluding impervious areas planned for routing to on-lot infiltration BMP: Yes ☐ No ☐ *If yes, complete Items 2-5; If no, proceed to Item 6*	DMA BMP Type	DMA BMP Type	DMA BMP Type *(Use additional forms for more BMPs)*
2 Total impervious area draining to pervious area (ft^2)			
3 Ratio of pervious area receiving runoff to impervious area			
4 Retention volume achieved from impervious area dispersion (ft^3) *V = Item2 * Item 3 * (0.5/12), assuming retention of 0.5 inches of runoff*			
5 Sum of retention volume achieved from impervious area dispersion (ft^3): *$V_{retention}$ =Sum of Item 4 for all BMPs*			
6 Implementation of Localized On-lot Infiltration BMPs (e.g. on-lot bioretention): Yes ☐ No ☐ *If yes, complete Items 7-13 for aggregate of all on-lot infiltration BMP in each DA; If no, proceed to Item 14*	DA DMA BMP Type	DA DMA BMP Type	DA DMA BMP Type *(Use additional forms for more BMPs)*
7 Ponding surface area (ft^2)			
8 Ponding depth (ft) (min. 0.5 ft.)			
9 Surface area of amended soil/gravel (ft^2)			
10 Average depth of amended soil/gravel (ft) (min. 1 ft.)			
11 Average porosity of amended soil/gravel			
12 Retention volume achieved from on-lot infiltration (ft^3) *$V_{retention}$ = (Item 7 *Item 8) + (Item 9 * Item 10 * Item 11)*			
13 Runoff volume retention from on-lot infiltration (ft^3): *$V_{retention}$ =Sum of Item 12 for all BMPs*			
14 Implementation of Street Trees: Yes ☐ No ☐ *If yes, complete Items 14-18. If no, proceed to Item 19*	DMA BMP Type	DMA BMP Type	DMA BMP Type *(Use additional forms for more BMPs)*
15 Number of Street Trees			
16 Average canopy cover over impervious area (ft^2)			
17 Runoff volume retention from street trees (ft^3) *$V_{retention}$ = Item 15 * Item 16 * (0.05/12) runoff retention = 0.05 in*			
18 Runoff volume retention from street tree BMPs (ft3): *$V_{retention}$ = Sum of Item 17 for all BMPs*			
19 Total Retention Volume from Site Design BMPs: *Sum of Items 5, 13 and 18*			

Add any additional information or tables here

4.3.2 Retention/Infiltration BMPs

Use Form 4.3-2 to compute the volume of runoff captured by proposed onsite retention/infiltration BMPs. Volume retention estimates are sensitive to the percolation rate used, which determines the amount of runoff that can be infiltrated within the specified drawdown time. The infiltration safety factor reduces field measured percolation to account for potential inaccuracy associated with field measurements, declining BMP performance over time, and compaction during construction.

4.3.2.1 Allowed Variations for Special Site Conditions

The bioretention system design parameters of this Section may be adjusted for the following special site conditions:

1) Facilities located within 10 feet of structures or other potential geotechnical hazards established by the geotechnical expert for the project may incorporate an impervious cutoff wall between the bioretention facility and the structure or other geotechnical hazard.

2) Facilities with documented high concentrations of pollutants in underlying soil or groundwater, facilities located where infiltration could contribute to a geotechnical hazard, and facilities located on elevated plazas or other structures may incorporate an impervious liner and may locate the underdrain discharge at the bottom of the subsurface drainage/storage layer (this configuration is commonly known as a “flow-through planter”).

3) Facilities located in areas of high groundwater, highly infiltrative soils or where connection of underdrain to a surface drain or to a subsurface storm drain are infeasible, may omit the underdrain.

4) Facilities serving high-risk areas such as fueling stations, truck stops, auto repairs, and heavy industrial sites must provide adequate pretreatment to address pollutants of concern; these high-risk areas should be isolated from storm water runoff or bioretention areas to prevent any chance of spill migration.

Form 4.3-2 Infiltration LID BMP - including underground BMPs (per DMA)

1 Remaining LID DCV not met by site design BMP (ft^3): *V_{unmet} = Form 4.2-1 Item 7 - Form 4.3-1 Item19*			
BMP Type *Use columns to the right to compute runoff volume retention from proposed infiltration BMP - Use additional forms for more BMPs*	DMA 4 BMP Type Drywell	DMA BMP Type	DMA BMP Type *(Use additional forms for more BMPs)*
2 Infiltration rate of underlying soils (in/hr)	3.8		
3 Infiltration safety factor *(from percolation test method below*)*	2		
4 Design percolation rate (in/hr) *P_{design} = Item 2 / Item 3*	1.9		
5 Ponded water drawdown time (hr) *Copy Item 6 in Form 4.2-1*	48		
6 Maximum ponding depth (ft) *6 ft maximum per City code*	6		
7 Ponding Depth (ft) *d_{BMP} = Minimum of (1/12*Item 4*Item 5) or Item 6*	10		
8 Infiltrating surface area, SA_{BMP} (ft^2)	63.62		
9 Amended soil depth, d_{media} (ft) If applicable *Only included in certain BMP types*			
10 Amended soil porosity			
11 Gravel depth, d_{media} (ft) *Only included in certain BMP types*			
12 Gravel porosity			
13 Duration of storm as basin is filling (hrs) *Typical ~ 3hrs*			
14 Above Ground Retention Volume (ft^3) *$V_{retention}$ = Item 8 * [Item7 + (Item 9 * Item 10) + (Item 11 * Item 12) + (Item 13 * (Item 4 / 12))]*			
15 Underground Retention Volume (ft^3) *Volume determined using manufacturer's specifications and calculations*	482.4		
16 Total Retention Volume from LID Infiltration BMPs: *(Sum of Items 14 and 15 for all infiltration BMPs included in plan)*			
17 Percentage of DCV achieved with infiltration BMP: % *Retention% =(Item 16 / Form 4.2-1 Item 7) *100*			
18 Is full LID DCV retained onsite with combination of hydrologic source control and LID retention/infiltration BMPs? Yes ☐ No ☐			

***Appendix A of the Riverside County Design Handbook for Low Impact Development Best Management Practices; available online at: http://www.floodcontrol.co.riverside.ca.us/NPDES/LIDBMP.aspx**

Add any additional information or tables here

4.3.3 Biotreatment BMP

Biotreatment BMPs may be considered if the full LID DCV cannot be met by maximizing retention and infiltration. A key consideration when using biotreatment BMP is the effectiveness of the proposed BMP in addressing the pollutants of concern for the project).

Use Form 4.3-3 to summarize the potential for volume based and/or flow based biotreatment options to biotreat the remaining unmet LID DCV. Biotreatment computations are included as follows:

- Use Form 4.3-4 to compute biotreatment in small volume based biotreatment BMP (e.g. bioretention w/underdrains);
- Use Form 4.3-5 to compute biotreatment in large volume based biotreatment BMP (e.g. extended detention);
- Use Form 4.3-6 to compute sizing criteria for flow-based biotreatment BMP (e.g. bioswales)

Form 4.3-3 Selection and Evaluation of Biotreatment BMP (per DMA) Or check if N/A ☐		
1 Remaining LID DCV not met by site design , or infiltration, BMP for potential biotreatment (ft^3): *Form 4.2-1 Item 7 - Form 4.3-2 Item 19 – Form 4.3-3 Item 16*	List pollutants of concern *Copy from Form 2.3-1.*	
2 Biotreatment BMP Selected *(Select biotreatment BMP(s) necessary to ensure all pollutants of concern are addressed through Unit Operations and Processes*	Volume-based biotreatment *Use Forms 4.3-5 and 4.3-6 to compute treated volume*	Flow-based biotreatment *Use Form 4.3-7 to compute treated flow*
	☐ Bioretention with underdrain ☐ Planter box with underdrain ☐ Dry extended detention	☐ Rock or Vegetated swale ☐ Vegetated buffer/filter strip ☐ Proprietary biotreatment
3 Volume biotreated in volume based biotreatment BMP (ft^3): *Form 4.3-5 Item 15 + Form 4.3-6 Item 13*	**4** Compute remaining LID DCV with implementation of volume based biotreatment BMP (ft^3): *Item 1 – Item 3*	**5** Remaining fraction of LID DCV for sizing flow based biotreatment BMP: % *Item 4 / Item 1*
6 Flow-based biotreatment BMP capacity provided (cfs):		
7 Metrics for MEP determination: • Provided a WQMP with the portion of site area used for suite of LID BMP equal to minimum thresholds for the proposed category of development: ☐		

Add any additional information or tables here

Click here to enter text.

Form 4.3-4 Volume Based Biotreatment (DA 1) – Bioretention and Planter Boxes with Underdrains; Or check if N/A ☐			
Biotreatment BMP Type *(Bioretention w/underdrain, planter box w/underdrain, other comparable BMP)*	DMA BMP Type	DMA BMP Type	DMA BMP Type *(Use additional forms for more BMPs)*
1 Pollutants addressed with BMP *List all pollutants of concern that will be effectively reduced through specific Unit Operations and Processes*			
2 Amended soil infiltration rate *Typical ~ 5.0*			
3 Amended soil infiltration safety factor *Typical ~ 2.0*			
4 Amended soil design percolation rate (in/hr) P_{design} *= Item 2 / Item 3*			
5 Ponded water drawdown time (hr) *Copy Item 6 from Form 4.2-1*			
6 Maximum ponding depth (ft) *6 ft maximum per City code*			
7 Ponding Depth (ft) d_{BMP} *= Minimum of (1/12 * Item 4 * Item 5) or Item 6*			
8 Amended soil surface area (ft^2)			
9 Amended soil depth (ft)			
10 Amended soil porosity, *n*			
11 Gravel depth (ft)			
12 Gravel porosity, *n*			
13 Duration of storm as basin is filling (hrs) *Typical ~ 3hrs*			
14 Biotreated Volume (ft^3) $V_{biotreated}$ *= Item 8 * [(Item 7/2) + (Item 9 * Item 10) +(Item 11 * Item 12) + (Item 13 * (Item 4 / 12))]*			
15 Total biotreated volume from bioretention and/or planter box with underdrains BMP: *Sum of Item 14 for all volume-based BMPs included in this form*			

Add any additional information or tables here

Click here to enter text.

Form 4.3-5 Volume Based Biotreatment (per DMA) – Extended Detention; Or check if N/A ☐

Biotreatment BMP Type *Extended dry detention, or other comparable proprietary BMP. If BMP includes multiple modules (E.g. forebay and main basin), provide separate estimates for storage and pollutants treated in each module.*	DMA BMP Type		DMA BMP Type *(Use additional forms for more BMPs)*	
	Forebay	Basin	Forebay	Basin
1 Pollutants addressed with BMP forebay and basin *List all pollutant of concern that will be effectively reduced through specific Unit Operations and Processes*				
2 Bottom width (ft)				
3 Bottom length (ft)				
4 Bottom area (ft^2) A_{bottom} = *Item 2 * Item 3*				
5 Side slope (ft/ft)				
6 Depth of storage (ft)				
7 Water surface area (ft^2) $A_{surface}$ =*(Item 2 + (2 * Item 5 * Item 6)) * (Item 3 + (2 * Item 5 * Item 6))*				
8 Storage volume (ft^3) *For BMP with a forebay, ensure fraction of total storage is within ranges specified in BMP specific fact sheets* V =*Item 6 / 3 * [Item 4 + Item 7 + (Item 4 * Item 7)^0.5]*				
9 Drawdown Time (hrs) *Copy Item 6 from Form 2.1*				
10 Outflow rate (cfs) Q_{BMP} = *(Item* $8_{forebay}$ *+ Item* 8_{basin}*) / (Item 9 * 3600)*				
11 Duration of design storm event (hrs)				
12 Biotreated Volume (ft^3) $V_{biotreated}$ = *(Item* $8_{forebay}$ *+ Item* 8_{basin}*) +(Item 10 * Item 11 * 3600)*				
13 Total biotreated volume from extended detention : *(Sum of Item 12 for all BMP included in plan)*				

Add any additional information or tables here

Click here to enter text.

Form 4.3-6 Flow Based Biotreatment (per DMA) Or check if N/A ☐			
Biotreatment BMP Type *Vegetated swale, vegetated filter strip, or other comparable proprietary BMP*	DMA BMP Type	DMA BMP Type	DMA BMP Type *(Use additional forms for more BMPs)*
1 Pollutants addressed with BMP *List all pollutant of concern that will be effectively reduced through specific Unit Operations and Processes*			
2 Flow depth for water quality treatment (ft) *BMP specific*			
3 Bed slope (ft/ft) *BMP specific,*			
4 Manning's roughness coefficient			
5 Bottom width (ft)			
6 Side Slope (ft/ft) *BMP specific*			
7 Cross sectional area (ft^2) *A = (Item 5 * Item 2) + (Item 6 * Item 2^2)*			
8 Water quality flow velocity (ft/sec) *V = Form 4.3-5 Item 6 / Item 7*			
9 Hydraulic residence time (min)			
10 Length of flow based BMP (ft) *L = Item 8 * Item 9 * 60*			
11 Water surface area at water quality flow depth (ft^2) *SA_{top} = (Item 5 + (2 * Item 2 * Item 6)) * Item 10*			

Add any additional information or tables here

Click here to enter text.

4.3.5 Conformance Summary

Complete Form 4.3-7 to demonstrate how on-site LID DCV is met with proposed site design, infiltration, and/or biotreatment BMP. The bottom line of the form is used to describe the basis for infeasibility determination for on-site LID BMP to achieve full LID DCV, and provides methods for computing remaining volume to be addressed in an alternative compliance plan. If the project has more than one outlet, then complete additional versions of this form for each outlet.

Form 4.3-7 Conformance Summary and Alternative Compliance Volume Estimate (DA 1)	
1 Total LID DCV for the Project DA-1 (ft^3):	*Copy Item 7 in Form 4.2-1*
2 On-site retention with site design BMP (ft^3):	*Copy Item18 in Form 4.3-2*
3 On-site retention with LID infiltration BMP (ft^3):	*Copy Item 16 in Form 4.3-3*
4 On-site biotreatment with volume based biotreatment BMP (ft^3):	*Copy Item 3 in Form 4.3-4*
5 Flow capacity provided by flow based biotreatment BMP (cfs):	*Copy Item 6 in Form 4.3-4*
6 LID BMP performance criteria are achieved if answer to any of the following is "Yes": • Full retention of LID DCV with site design or infiltration BMP: Yes ☐ No ☐ *If yes, sum of Items 2, 3, and 4 is greater than Item 1* • Combination of on-site retention BMPs for a portion of the LID DCV and volume-based biotreatment BMP that address all pollutants of concern for the remaining LID DCV: Yes ☐ No ☐ *If yes, a) sum of Items 2, 3, 4, and 5 is greater than Item 1, and Items 2, 3 and 4 are maximized; or b) Item 6 is greater than Form 4.3--5 Item 6 and Items 2, 3 and 4 are maximized* ▪ On-site retention and infiltration is determined to be infeasible; therefore biotreatment BMP provides biotreatment for all pollutants of concern for full LID DCV: Yes ☐ No ☐ *If yes, Form 4.3-1 Items 7 and 8 were both checked yes*	
7 If the LID DCV is not achieved by any of these means, then the project may be allowed to develop an alternative compliance plan. Check box that describes the scenario which caused the need for alternative compliance: • Combination of Site Design, retention and infiltration, , and biotreatment BMPs provide less than full LID DCV capture: ☐ *Checked yes if Form 4.3-4 Item 7is checked yes, Form 4.3-4 Item 6 is zero, and sum of Items 2, 3, 4, and 5 is less than Item 1. If so, apply water quality credits and calculate volume for alternative compliance, V_{alt} = (Item 1 – Item 2 – Item 3 – Item 4 – Item 5) * (100 - Form 2.4-1 Item 2)%* • Facilities, or a combination of facilities, of a different design than in Section E.12.e.(ii)(f) may be permitted if all of the following measures of equivalent effectiveness are demonstrated: 1) Equal or greater amount of runoff infiltrated or evapotranspired; ☐ 2) Equal or lower pollutant concentrations in runoff that is discharged after biotreatment; ☐ 3) Equal or greater protection against shock loadings and spills; ☐ 4) Equal or greater accessibility and ease of inspection and maintenance. ☐	

Section 5 Inspection and Maintenance Responsibility for Post-Construction BMPs

All BMPs included as part of the project WQMP are required to be maintained through regular scheduled inspection and maintenance. Fully complete Form 5-1 summarizing all BMPs included in the WQMP. Attach additional forms as needed. The WQMP shall also include a detailed Operation and Maintenance Plan for all BMPs and a Maintenance Agreement prepared using the Template in Attachment A. The Maintenance Agreement must also be attached to the WQMP.

Note that the Maintenance Agreement must be completed, signed, notarized, and submitted to the City before construction permits are issued, and must be recorded before final inspection and submitted to the City

Form 5-1 BMP Inspection and Maintenance (use additional forms as necessary)

BMP	Reponsible Party(s)	Inspection/ Maintenance Activities Required	Minimum Frequency of Activities

Section 6 WQMP Attachments

6.1 BMP Exhibit (Site Plan)

Include a BMP Exhibit (Site Plan), at a size no less than 24" by 36," which includes the following minimum information:

- Insert in the title block (lower right hand corner) of BMP Exhibit: the WQMP Number (assigned by staff) and the grading/building or Planning Application permit numbers
- Project location (address, tract/lot number(s), etc.)
- Site boundary
- Land uses and land covers, as applicable
- Suitability/feasibility constraints
- Locations of Structural Source Control, LID, and Treatment BMPs
- Drainage delineations and flow information
- Delineate the area being treated by each structural BMP
- GIS coordinates for LID and Treatment Control BMPs
- Drainage connections
- BMP details
- Preparer name and stamp
- Operations and Maintenance Plan as Plan Notes

Please do not include any areas outside of the project area or any information not related to drainage or water quality. The approved BMP Exhibit (Site Plan) shall be submitted as a plan sheet on all grading and building plan sets submitted for plan check review and approval. The BMP Exhibit shall be at the same size as the rest of the plan sheets in the submittal and shall have an approval stamp and signature prior to plan check submittal.

6.2 Operation and Maintenance Plan

Develop and attach an Operation and Maintenance Plan for the project BMPs. The Operation and Maintenance Plan must address the following concerns:

- What maintenance activities is/are needed based on BMP design features and operation?
- How frequently will maintenance be performed?
- What conditions will trigger maintenance activities?
- Who is/are responsible for these activities?

- What inspections are required, and what must be inspected?
- How frequently will inspections be required to be conducted?
- Who will conduct inspections?
- What inspection and maintenance records will be kept and be available for review?

Detailed descriptions of BMP maintenance activities are provided in these references:

Chapter 5 in the Riverside County WQMP Guidance Document:
http://www.waterboards.ca.gov/santaana/water_issues/programs/stormwater/docs/rcpermit/wqmp/final/Santa_Ana_WQMP_FINAL.pdf

Los Angeles County Stormwater BMP Operations and Maintenance Manual :
http://dpw.lacounty.gov/DES/design_manuals/StormwaterBMPDesignandMaintenance.pdf

6.3 Electronic Data Submittal

Minimum requirements include submittal of PDF exhibits in addition to hard copies. Format must not require specialized software to open.

6.4 Maintenance Agreement

Attach Maintenance Agreement for BMPs to the WQMP.

6.5 Other Supporting Documentation

- Activity Restriction – CC&R's & Lease Agreements; if applicable

6.6 Submittal and Recordation of the Maintenance Agreement for the Water Quality Management Plan

Following approval of the Final Project-Specific WQMP, two copies of the approved WQMP (including BMP Exhibit, Operations and Maintenance (O&M) Plan, and Appendices) shall be submitted. In addition, these documents shall be submitted in a PDF format.

The fully signed (with notarization) and executed Maintenance Agreement for each approved WQMP shall be submitted to the City for recordation in the San Bernardino County Clerk-Recorder's Office, prior to final inspection and issuance of a Certificate of Occupancy.

Attachment A

WQMP Maintenance Agreement Template

Print Agreement Only as Single-Sided Document

RECORDING REQUESTED BY

City of Hesperia: Engineering Division

AND WHEN RECORDED MAIL DOCUMENT TO:

NAME	**City Clerk: c/o** _____
STREET ADDRESS	9700 7th Avenue
CITY, STATE & ZIP CODE	Hesperia, CA 92345

SPACE ABOVE FOR RECORDER'S USE ONLY

COVENANT AND AGREEMENT REGARDING WATER QUALITY MANAGEMENT PLAN AND STORMWATER BEST MANAGEMENT PRACTICES TRANSFER, ACCESS AND MAINTENANCE

Title of Document

Document exempt from recording fees pursuant to Cal. Gov. Code 6103 & 27383

THIS AREA FOR RECORDER'S USE ONLY

THIS COVER SHEET ADDED TO PROVIDE ADEQUATE SPACE FOR RECORDING INFORMATION

Covenant and Agreement Regarding Water Quality Management Plan and Stormwater Best Management Practices Transfer, Access and Maintenance

OWNER NAME: Insert Property Owner Name

PROPERTY ADDRESS: Insert Project Address

Insert Project City, State, Zip

APN: Insert Project APN

THIS AGREEMENT is made and entered into in

CITY OF HESPERIA, COUNTY OF SAN BERNARDINO, California, this _____ day of

_____, by and between

Insert Property Owner Name, hereinafter

referred to as Owner, and the CITY OF HESPERIA, a political subdivision of the State of California, hereinafter referred to as "the City";

WHEREAS, the Owner owns real property ("Property") in the State of California, County of San Bernardino, located at [STREET ADDRESS] within the City of Hesperia, more commonly referred to as San Bernardino County Tax Assessor Parcel No. [APN Number] specifically described in Exhibit "A" and depicted in Exhibit "B", each of which is attached hereto and incorporated herein by this reference; and

WHEREAS, at the time of initial approval of the development project known as

Insert Project Name within the Property described herein, the City required the project to employ Best Management Practices, hereinafter referred to as "BMPs," to minimize pollutants in urban runoff; and

WHEREAS, the Owner has chosen to install and/or implement BMPs as described in the Water Quality Management Plan, dated _____, on file with the City and incorporated herein by this reference, hereinafter referred to as "WQMP", to minimize pollutants in stormwater and urban runoff and to minimize other adverse impacts of stormwater and urban runoff; and

WHEREAS, said WQMP has been certified by the Owner and reviewed and approved by the City; and

WHEREAS, the Owner is aware that periodic and continuous maintenance, including, but not necessarily limited to, filter material replacement and sediment removal, is required to assure peak performance of all BMPs in the WQMP and that, furthermore, such maintenance activity will require compliance with all Local, State, or Federal laws and regulations, including those pertaining to confined space and waste disposal methods, in effect at the time such maintenance occurs.

NOW THEREFORE, it is mutually stipulated and agreed as follows:

1. Owner shall comply with the WQMP.

2. All maintenance or replacement of any BMPs specified within the approved WQMP is the sole responsibility of the Owner in accordance with the terms of this Agreement.

3. Owner hereby provides the City's designee complete access, of any duration, to the BMPs and their immediate vicinity at any time, upon reasonable notice, or in the event of emergency, as determined by the City, no advance notice, for the purpose of inspection, sampling, testing of the BMPs, and in case of emergency, to undertake all necessary repairs or other preventative measures at owner's expense as provided in paragraph 5 below. The City shall make every effort at all times to minimize or avoid interference with Owner's use of the Property. Denial of access to any premises or facility that contains WQMP features is a breach of this Agreement and may also be a violation of the Clean Water Act, the California Water Code, and/or the City's NPDES Permit Implementation regulations. If there is reasonable cause to believe that an illicit discharge or breach of this Agreement is occurring on the premises then the authorized enforcement agency may seek issuance of a search warrant from any court of competent jurisdiction in addition to other enforcement actions. Owner recognizes that the City may perform routine and regular inspections, as well as emergency inspections, of the BMPs. Owner or Owner's successors or assigns shall pay City for all costs incurred by City in the inspection, sampling, testing of the BMPs within thirty (30) calendar days of City invoice.

4. Owner shall use its best efforts diligently to maintain all BMPs in a manner assuring peak performance at all times. All reasonable precautions shall be exercised by Owner and Owner's representative or contractor in the removal and extraction of any material(s) from the BMPs and the ultimate disposal of the material(s) in a manner consistent with all relevant laws and regulations in effect at the time. As may be requested from time to time by the City, the Owner shall provide the City with documentation identifying the material(s) removed, the quantity, and disposal destination, testing construction or reconstruction.

5. In the event Owner, or its successors or assigns, fails to accomplish the necessary maintenance contemplated by this Agreement, within five (5) business days of being given written notice by the City, the City is hereby authorized to cause any maintenance necessary to be done and charge the entire cost and expense against the Property and/or to the Owner or Owner's successors or assigns, including administrative costs, attorney's fees and interest thereon at the maximum rate authorized by the City Code from the date of the notice of expense until paid in full. Owner or Owner's successors or assigns shall pay City within thirty (30) calendar days of City invoice.

6. The City may require the owner to post security in form and for a time period satisfactory to the City to guarantee the performance of the obligations stated herein. Should the Owner fail to perform the obligations under the Agreement, the City may, in the case of a cash bond, act for the Owner using the proceeds from it, or in the case of a surety bond, require the surety (ies) to perform the obligations of this Agreement.

7. The City agrees, from time to time, within ten (10) business days after request of Owner, to execute and deliver to Owner, or Owner's designee, an estoppel certificate requested by Owner, stating that this Agreement is in full force and effect, and that Owner is not in default hereunder with regard to any maintenance or payment obligations (or specifying in detail the nature of Owner's default). Owner shall pay all costs and expenses incurred by the City in its investigation of whether to issue an estoppel certificate within thirty (30) calendar days after receipt of a City invoice and prior to the City's issuance of such certificate. Where the City cannot issue an estoppel certificate, Owner shall pay the City within thirty (30) calendar days of receipt of a City invoice.

8. Owner shall not change any BMPs identified in the WQMP without an amendment to this Agreement approved by authorized representatives of both the City and the Owner.

9. City and Owner shall comply with all applicable laws, ordinances, rules, regulations, court orders and government agency orders now or hereinafter in effect in carrying out the terms of this Agreement. If a provision of this Agreement is terminated or held to be invalid, illegal or unenforceable, the validity, legality and enforceability of the remaining provisions shall remain in full effect.

10. In addition to any remedy available to City under this Agreement, if Owner violates any term of this Agreement and does not cure the violation within the time already provided in this Agreement, or, if not provided, within thirty (30) calendar days, or within such time authorized by the City if said cure reasonably requires more than the subject time, the City may bring an action at law or in equity in a court of competent jurisdiction to enforce compliance by the Owner with the terms of this Agreement. In such action, the City may recover any damages to which the City may be entitled for the violation, enjoin the violation by temporary or permanent injunction without the necessity of proving actual damages or the inadequacy of otherwise available legal remedies, or obtain other equitable relief, including, but not limited to, the restoration of the Property and/or the BMPs identified in the WQMP to the condition in which it/they existed prior to any such violation or injury.

11. This Agreement shall be recorded in the Office of the Recorder of San Bernardino County, California, at the expense of the Owner and shall constitute notice to all successors and assigns of the title to said Property of the obligation herein set forth, and also a lien in such amount as will fully reimburse the City, including interest as herein above set forth, subject to foreclosure in event of default in payment.

12. In event of legal action occasioned by any default or action of the Owner, or its successors or assigns, then the Owner and its successors or assigns agree(s) to hold the City harmless and pay all costs incurred by the City in enforcing the terms of this Agreement, including reasonable attorney's fees and costs, and that the same shall become a part of the lien against said Property.

13. It is the intent of the parties hereto that burdens and benefits herein undertaken shall constitute covenants that run with said Property and constitute a lien there against.

14. The obligations herein undertaken shall be binding upon the heirs, successors, executors, administrators and assigns of the parties hereto. The term "Owner" shall include not only the present Owner, but also its heirs, successors, executors, administrators, and assigns. Owner shall notify any successor to title of all or part of the Property about the existence of

this Agreement. Owner shall provide such notice prior to such successor obtaining an interest in all or part of the Property. Owner shall provide a copy of such notice to the City at the same time such notice is provided to the successor.

15. Time is of the essence in the performance of this Agreement.

16. Any notice to a party required or called for in this Agreement shall be served in person, or by deposit in the U.S. Mail, first class postage prepaid, to the address set forth below. Notice(s) shall be deemed effective upon receipt, or seventy-two (72) hours after deposit in the U.S. Mail, whichever is earlier. A party may change a notice address only by providing written notice thereof to the other party.

17. Owner agrees to indemnify, defend (with counsel reasonably approved by the City) and hold harmless the City and its authorized officers, employees, agents and volunteers from any and all claims, actions, losses, damages, and/or liability arising out of this Agreement from any cause whatsoever, including the acts, errors or omissions of any person and for any costs or expenses incurred by the City on account of any claim except where such indemnification is prohibited by law. This indemnification provision shall apply regardless of the existence or degree of fault of indemnitees. The Owner's indemnification obligation applies to the City's "active" as well as "passive" negligence but does not apply to the City's "sole negligence" or "willful misconduct" within the meaning of Civil Code Section 2782, or to any claims, actions, losses, damages, and/or liabilities, to the extent caused by the acts or omissions of any third party contractors undertaking any work (other than field inspections) or other maintenance on the Property on behalf of the City under this Agreement.

[REMAINDER OF THIS PAGE INTENTIONALLY LEFT BLANK]

IF TO CITY:

City of Hesperia

9700 Seventh Avenue

Hesperia, CA 92345

IF TO OWNER:

Insert Owner/Developer Name

Insert Owner/Developer Address

Insert Owner/Developer City, State, Zip

IN WITNESS THEREOF, the parties hereto have affixed their signatures as of the date first written above.

OWNER:
Signature: _____

Name: _____

Title: _____

Date: _____

OWNER:

Signature: _____

Name: _____

Title: _____

Date: _____

FOR: Maintenance Agreement, dated _____, for the project known as

Insert Project Name

(APN)__ Insert Project APN_,

As described in the WQMP dated _____.

NOTARIES ON FOLLOWING PAGE(S)

A notary acknowledgement for each signature is required for recordation.

ACCEPTED BY:

Director of Development Services or designee

Date: _____

Attachment: Notary Acknowledgement

ATTACHMENT 1

(Notary Acknowledgement)

ATTACHMENT 1, Page 2

(Notary Acknowledgement)

EXHIBIT A

(Legal Description)

EXHIBIT B

(Map/illustration)

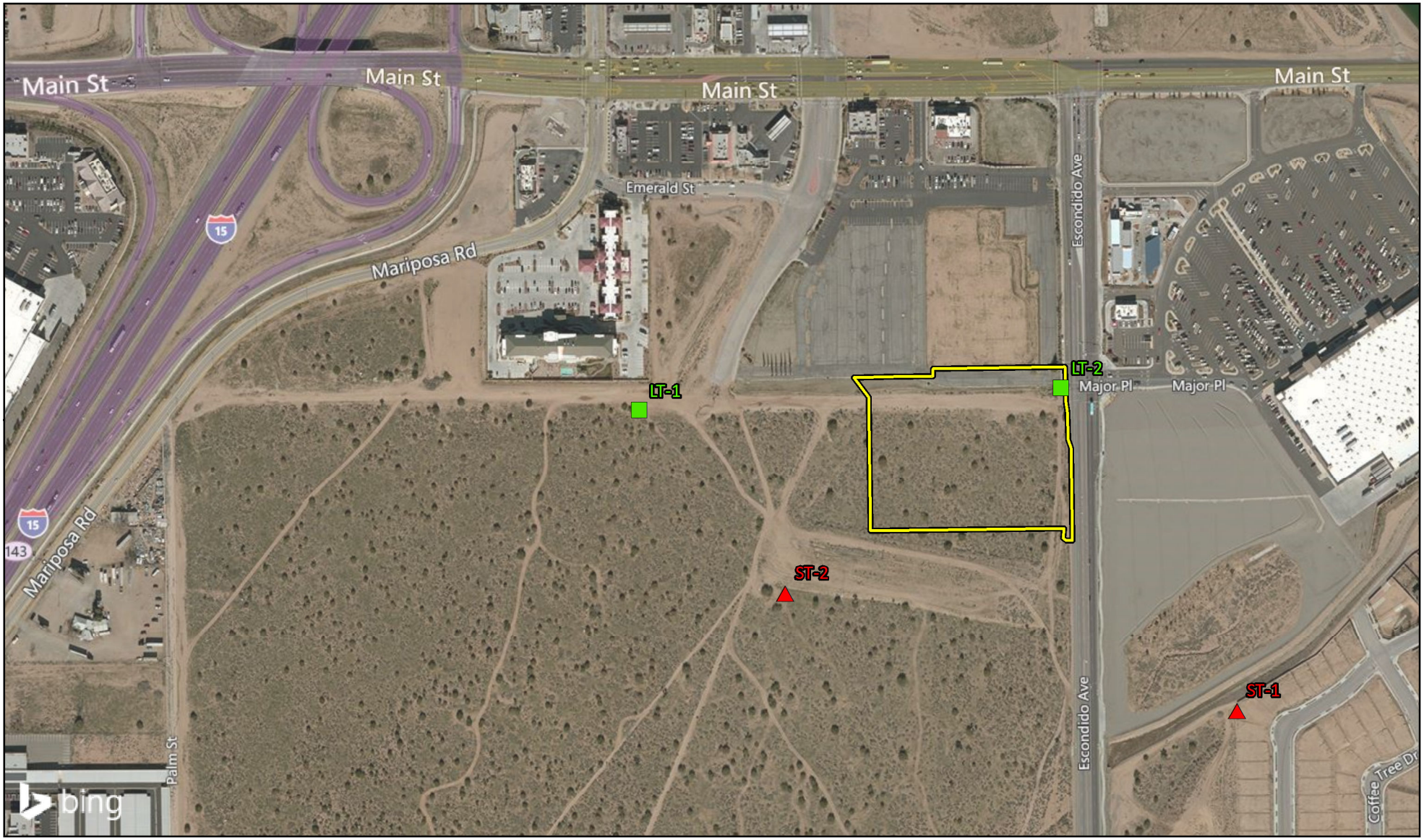

LSA

LEGEND

Project Location

Long-Term Monitoring Locations

Short-Term Monitoring Locations

0 200 400
FEET

FIGURE 3

Hesperia Kaiser Permanente Medical Office Building

Noise Monitoring Locations

SOURCE: Bing Maps (2/2015); LSA (2018)

I:\KSP1801\GIS\MXD\NoiseMontLoc.mxd (10/16/2018)

TABLE Existing-01
FHWA ROADWAY NOISE LEVEL ANALYSIS

RUN DATE: 10/08/2018
ROADWAY SEGMENT: Main Street west of Key Point Avenue
NOTES: Kaiser Permanente Medical Office Project - Existing

---

* * ASSUMPTIONS * *

AVERAGE DAILY TRAFFIC: 17860 SPEED (MPH): 55 GRADE: .5

TRAFFIC DISTRIBUTION PERCENTAGES

	DAY	EVENING	NIGHT
AUTOS	75.51	12.57	9.34
M-TRUCKS	1.56	0.09	0.19
H-TRUCKS	0.64	0.02	0.08

ACTIVE HALF-WIDTH (FT): 36 SITE CHARACTERISTICS: SOFT

---

* * CALCULATED NOISE LEVELS * *

CNEL AT 50 FT FROM NEAR TRAVEL LANE CENTERLINE (dB) = 69.38

DISTANCE (FEET) FROM ROADWAY CENTERLINE TO CNEL

70 CNEL	65 CNEL	60 CNEL	55 CNEL
79.6	157.1	331.4	710.4

TABLE Existing-02
FHWA ROADWAY NOISE LEVEL ANALYSIS

RUN DATE: 10/08/2018
ROADWAY SEGMENT: Main Street between Key Point Avenue and I-15 SB Off-Ramp
NOTES: Kaiser Permanente Medical Office Project - Existing

---

* * ASSUMPTIONS * *

AVERAGE DAILY TRAFFIC: 27020 SPEED (MPH): 50 GRADE: .5

TRAFFIC DISTRIBUTION PERCENTAGES

	DAY	EVENING	NIGHT
AUTOS	75.51	12.57	9.34
M-TRUCKS	1.56	0.09	0.19
H-TRUCKS	0.64	0.02	0.08

ACTIVE HALF-WIDTH (FT): 36 SITE CHARACTERISTICS: SOFT

---

* * CALCULATED NOISE LEVELS * *

CNEL AT 50 FT FROM NEAR TRAVEL LANE CENTERLINE (dB) = 70.13

DISTANCE (FEET) FROM ROADWAY CENTERLINE TO CNEL

70 CNEL	65 CNEL	60 CNEL	55 CNEL
87.4	175.2	371.2	796.6

TABLE Existing-03
FHWA ROADWAY NOISE LEVEL ANALYSIS

RUN DATE: 10/08/2018
ROADWAY SEGMENT: Main Street between I-15 SB Off-Ramp and I-15 NB On/Off-Ramps
NOTES: Kaiser Permanente Medical Office Project - Existing

---

* * ASSUMPTIONS * *

AVERAGE DAILY TRAFFIC: 30405 SPEED (MPH): 50 GRADE: .5

TRAFFIC DISTRIBUTION PERCENTAGES

	DAY	EVENING	NIGHT
AUTOS	75.51	12.57	9.34
M-TRUCKS	1.56	0.09	0.19
H-TRUCKS	0.64	0.02	0.08

ACTIVE HALF-WIDTH (FT): 36 SITE CHARACTERISTICS: SOFT

---

* * CALCULATED NOISE LEVELS * *

CNEL AT 50 FT FROM NEAR TRAVEL LANE CENTERLINE (dB) = 70.64

DISTANCE (FEET) FROM ROADWAY CENTERLINE TO CNEL

70 CNEL	65 CNEL	60 CNEL	55 CNEL
93.4	189.0	401.3	861.7

TABLE Existing-04
FHWA ROADWAY NOISE LEVEL ANALYSIS

RUN DATE: 10/08/2018
ROADWAY SEGMENT: Main Street between I-15 NB On/Off-Ramps and Mariposa Road
NOTES: Kaiser Permanente Medical Office Project - Existing

---

* * ASSUMPTIONS * *

AVERAGE DAILY TRAFFIC: 39800 SPEED (MPH): 50 GRADE: .5

TRAFFIC DISTRIBUTION PERCENTAGES

	DAY	EVENING	NIGHT
AUTOS	75.51	12.57	9.34
M-TRUCKS	1.56	0.09	0.19
H-TRUCKS	0.64	0.02	0.08

ACTIVE HALF-WIDTH (FT): 36 SITE CHARACTERISTICS: SOFT

---

* * CALCULATED NOISE LEVELS * *

CNEL AT 50 FT FROM NEAR TRAVEL LANE CENTERLINE (dB) = 71.81

DISTANCE (FEET) FROM ROADWAY CENTERLINE TO CNEL

70 CNEL	65 CNEL	60 CNEL	55 CNEL
109.2	224.9	479.6	1030.8

TABLE Existing-05
FHWA ROADWAY NOISE LEVEL ANALYSIS

RUN DATE: 10/08/2018
ROADWAY SEGMENT: Main Street between Mariposa Road and Escondido Avenue
NOTES: Kaiser Permanente Medical Office Project - Existing

---

* * ASSUMPTIONS * *

AVERAGE DAILY TRAFFIC: 35880 SPEED (MPH): 50 GRADE: .5

TRAFFIC DISTRIBUTION PERCENTAGES

	DAY	EVENING	NIGHT
AUTOS	75.51	12.57	9.34
M-TRUCKS	1.56	0.09	0.19
H-TRUCKS	0.64	0.02	0.08

ACTIVE HALF-WIDTH (FT): 36 SITE CHARACTERISTICS: SOFT

---

* * CALCULATED NOISE LEVELS * *

CNEL AT 50 FT FROM NEAR TRAVEL LANE CENTERLINE (dB) = 71.36

DISTANCE (FEET) FROM ROADWAY CENTERLINE TO CNEL

70 CNEL	65 CNEL	60 CNEL	55 CNEL
102.7	210.3	447.8	962.0

TABLE Existing-06
FHWA ROADWAY NOISE LEVEL ANALYSIS

RUN DATE: 10/08/2018
ROADWAY SEGMENT: Main Street between Escondido Avenue and Topaz Avenue
NOTES: Kaiser Permanente Medical Office Project - Existing

---

* * ASSUMPTIONS * *

AVERAGE DAILY TRAFFIC: 29925 SPEED (MPH): 50 GRADE: .5

TRAFFIC DISTRIBUTION PERCENTAGES

	DAY	EVENING	NIGHT
AUTOS	75.51	12.57	9.34
M-TRUCKS	1.56	0.09	0.19
H-TRUCKS	0.64	0.02	0.08

ACTIVE HALF-WIDTH (FT): 24 SITE CHARACTERISTICS: SOFT

---

* * CALCULATED NOISE LEVELS * *

CNEL AT 50 FT FROM NEAR TRAVEL LANE CENTERLINE (dB) = 71.29

DISTANCE (FEET) FROM ROADWAY CENTERLINE TO CNEL

70 CNEL	65 CNEL	60 CNEL	55 CNEL
88.6	185.3	396.6	853.1

TABLE Existing-07
FHWA ROADWAY NOISE LEVEL ANALYSIS

RUN DATE: 10/08/2018
ROADWAY SEGMENT: Main Street east of Topaz Avenue
NOTES: Kaiser Permanente Medical Office Project - Existing

---

* * ASSUMPTIONS * *

AVERAGE DAILY TRAFFIC: 28060 SPEED (MPH): 50 GRADE: .5

TRAFFIC DISTRIBUTION PERCENTAGES

	DAY	EVENING	NIGHT
AUTOS	75.51	12.57	9.34
M-TRUCKS	1.56	0.09	0.19
H-TRUCKS	0.64	0.02	0.08

ACTIVE HALF-WIDTH (FT): 24 SITE CHARACTERISTICS: SOFT

---

* * CALCULATED NOISE LEVELS * *

CNEL AT 50 FT FROM NEAR TRAVEL LANE CENTERLINE (dB) = 71.01

DISTANCE (FEET) FROM ROADWAY CENTERLINE TO CNEL

70 CNEL	65 CNEL	60 CNEL	55 CNEL
85.2	177.7	380.0	817.3

TABLE Existing-08
FHWA ROADWAY NOISE LEVEL ANALYSIS

RUN DATE: 10/08/2018
ROADWAY SEGMENT: Escondido Avenue between Main Street and Major Place
NOTES: Kaiser Permanente Medical Office Project - Existing

---

* * ASSUMPTIONS * *

AVERAGE DAILY TRAFFIC: 18200 SPEED (MPH): 50 GRADE: .5

TRAFFIC DISTRIBUTION PERCENTAGES

	DAY	EVENING	NIGHT
AUTOS	75.51	12.57	9.34
M-TRUCKS	1.56	0.09	0.19
H-TRUCKS	0.64	0.02	0.08

ACTIVE HALF-WIDTH (FT): 24 SITE CHARACTERISTICS: SOFT

---

* * CALCULATED NOISE LEVELS * *

CNEL AT 50 FT FROM NEAR TRAVEL LANE CENTERLINE (dB) = 69.13

DISTANCE (FEET) FROM ROADWAY CENTERLINE TO CNEL

70 CNEL	65 CNEL	60 CNEL	55 CNEL
65.8	134.1	285.2	612.6

TABLE Existing-09
FHWA ROADWAY NOISE LEVEL ANALYSIS

RUN DATE: 10/08/2018
ROADWAY SEGMENT: Escondido Avenue between Major Place and Sultana Street
NOTES: Kaiser Permanente Medical Office Project - Existing

---

* * ASSUMPTIONS * *

AVERAGE DAILY TRAFFIC: 16930 SPEED (MPH): 50 GRADE: .5

TRAFFIC DISTRIBUTION PERCENTAGES

	DAY	EVENING	NIGHT
AUTOS	75.51	12.57	9.34
M-TRUCKS	1.56	0.09	0.19
H-TRUCKS	0.64	0.02	0.08

ACTIVE HALF-WIDTH (FT): 24 SITE CHARACTERISTICS: SOFT

---

* * CALCULATED NOISE LEVELS * *

CNEL AT 50 FT FROM NEAR TRAVEL LANE CENTERLINE (dB) = 68.82

DISTANCE (FEET) FROM ROADWAY CENTERLINE TO CNEL

70 CNEL	65 CNEL	60 CNEL	55 CNEL
63.1	128.0	271.9	583.8

TABLE Existing-10
FHWA ROADWAY NOISE LEVEL ANALYSIS

RUN DATE: 10/08/2018
ROADWAY SEGMENT: Escondido Avenue south of Sultana Street
NOTES: Kaiser Permanente Medical Office Project - Existing

---

* * ASSUMPTIONS * *

AVERAGE DAILY TRAFFIC: 13600 SPEED (MPH): 50 GRADE: .5

TRAFFIC DISTRIBUTION PERCENTAGES

	DAY	EVENING	NIGHT
AUTOS	75.51	12.57	9.34
M-TRUCKS	1.56	0.09	0.19
H-TRUCKS	0.64	0.02	0.08

ACTIVE HALF-WIDTH (FT): 24 SITE CHARACTERISTICS: SOFT

---

* * CALCULATED NOISE LEVELS * *

CNEL AT 50 FT FROM NEAR TRAVEL LANE CENTERLINE (dB) = 67.87

DISTANCE (FEET) FROM ROADWAY CENTERLINE TO CNEL

70 CNEL	65 CNEL	60 CNEL	55 CNEL
55.9	111.3	235.2	504.6

TABLE Existing-11
FHWA ROADWAY NOISE LEVEL ANALYSIS

RUN DATE: 10/08/2018
ROADWAY SEGMENT: Mariposa Road south of Main Street
NOTES: Kaiser Permanente Medical Office Project - Existing

---

* * ASSUMPTIONS * *

AVERAGE DAILY TRAFFIC: 3750 SPEED (MPH): 50 GRADE: .5

TRAFFIC DISTRIBUTION PERCENTAGES

	DAY	EVENING	NIGHT
AUTOS	75.51	12.57	9.34
M-TRUCKS	1.56	0.09	0.19
H-TRUCKS	0.64	0.02	0.08

ACTIVE HALF-WIDTH (FT): 6 SITE CHARACTERISTICS: SOFT

---

* * CALCULATED NOISE LEVELS * *

CNEL AT 50 FT FROM NEAR TRAVEL LANE CENTERLINE (dB) = 63.77

DISTANCE (FEET) FROM ROADWAY CENTERLINE TO CNEL

70 CNEL	65 CNEL	60 CNEL	55 CNEL
0.0	0.0	99.5	214.1

TABLE Existing-12
FHWA ROADWAY NOISE LEVEL ANALYSIS

RUN DATE: 10/08/2018
ROADWAY SEGMENT: I-15 North of Main Street
NOTES: Kaiser Permanente Medical Office Project - Existing

---

* * ASSUMPTIONS * *

AVERAGE DAILY TRAFFIC: 45570 SPEED (MPH): 70 GRADE: .5

TRAFFIC DISTRIBUTION PERCENTAGES

	DAY	EVENING	NIGHT
AUTOS	65.40	10.89	8.09
M-TRUCKS	3.07	0.18	0.37
H-TRUCKS	10.38	0.32	1.30

ACTIVE HALF-WIDTH (FT): 36 SITE CHARACTERISTICS: SOFT

---

* * CALCULATED NOISE LEVELS * *

CNEL AT 50 FT FROM NEAR TRAVEL LANE CENTERLINE (dB) = 80.53

DISTANCE (FEET) FROM ROADWAY CENTERLINE TO CNEL

70 CNEL	65 CNEL	60 CNEL	55 CNEL
395.1	848.2	1825.7	3932.0

TABLE Existing-13
FHWA ROADWAY NOISE LEVEL ANALYSIS

RUN DATE: 10/08/2018
ROADWAY SEGMENT: I-15 South of Main Street
NOTES: Kaiser Permanente Medical Office Project - Existing

---

* * ASSUMPTIONS * *

AVERAGE DAILY TRAFFIC: 62050 SPEED (MPH): 70 GRADE: .5

TRAFFIC DISTRIBUTION PERCENTAGES

	DAY	EVENING	NIGHT
AUTOS	65.40	10.89	8.09
M-TRUCKS	3.07	0.18	0.37
H-TRUCKS	10.38	0.32	1.30

ACTIVE HALF-WIDTH (FT): 36 SITE CHARACTERISTICS: SOFT

---

* * CALCULATED NOISE LEVELS * *

CNEL AT 50 FT FROM NEAR TRAVEL LANE CENTERLINE (dB) = 81.88

DISTANCE (FEET) FROM ROADWAY CENTERLINE TO CNEL

70 CNEL	65 CNEL	60 CNEL	55 CNEL
484.7	1041.7	2242.7	4830.4

TABLE Existing with Project-01
FHWA ROADWAY NOISE LEVEL ANALYSIS

RUN DATE: 10/08/2018
ROADWAY SEGMENT: Main Street west of Key Point Avenue
NOTES: Kaiser Permanente Medical Office Project - Existing with Project

---

* * ASSUMPTIONS * *

AVERAGE DAILY TRAFFIC: 18150 SPEED (MPH): 55 GRADE: .5

TRAFFIC DISTRIBUTION PERCENTAGES

	DAY	EVENING	NIGHT
AUTOS	75.51	12.57	9.34
M-TRUCKS	1.56	0.09	0.19
H-TRUCKS	0.64	0.02	0.08

ACTIVE HALF-WIDTH (FT): 36 SITE CHARACTERISTICS: SOFT

---

* * CALCULATED NOISE LEVELS * *

CNEL AT 50 FT FROM NEAR TRAVEL LANE CENTERLINE (dB) = 69.45

DISTANCE (FEET) FROM ROADWAY CENTERLINE TO CNEL

70 CNEL	65 CNEL	60 CNEL	55 CNEL
80.3	158.7	334.9	718.1

TABLE Existing with Project-02
FHWA ROADWAY NOISE LEVEL ANALYSIS

RUN DATE: 10/08/2018
ROADWAY SEGMENT: Main Street between Key Point Avenue and I-15 SB Off-Ramp
NOTES: Kaiser Permanente Medical Office Project - Existing with Project

---

* * ASSUMPTIONS * *

AVERAGE DAILY TRAFFIC: 27310 SPEED (MPH): 50 GRADE: .5

TRAFFIC DISTRIBUTION PERCENTAGES

	DAY	EVENING	NIGHT
AUTOS	75.51	12.57	9.34
M-TRUCKS	1.56	0.09	0.19
H-TRUCKS	0.64	0.02	0.08

ACTIVE HALF-WIDTH (FT): 36 SITE CHARACTERISTICS: SOFT

---

* * CALCULATED NOISE LEVELS * *

CNEL AT 50 FT FROM NEAR TRAVEL LANE CENTERLINE (dB) = 70.17

DISTANCE (FEET) FROM ROADWAY CENTERLINE TO CNEL

70 CNEL	65 CNEL	60 CNEL	55 CNEL
87.9	176.4	373.8	802.3

TABLE Existing with Project-03
FHWA ROADWAY NOISE LEVEL ANALYSIS

RUN DATE: 10/08/2018
ROADWAY SEGMENT: Main Street between I-15 SB Off-Ramp and I-15 NB On/Off-Ramps
NOTES: Kaiser Permanente Medical Office Project - Existing with Project

---

* * ASSUMPTIONS * *

AVERAGE DAILY TRAFFIC: 31285 SPEED (MPH): 50 GRADE: .5

TRAFFIC DISTRIBUTION PERCENTAGES

	DAY	EVENING	NIGHT
AUTOS	75.51	12.57	9.34
M-TRUCKS	1.56	0.09	0.19
H-TRUCKS	0.64	0.02	0.08

ACTIVE HALF-WIDTH (FT): 36 SITE CHARACTERISTICS: SOFT

---

* * CALCULATED NOISE LEVELS * *

CNEL AT 50 FT FROM NEAR TRAVEL LANE CENTERLINE (dB) = 70.76

DISTANCE (FEET) FROM ROADWAY CENTERLINE TO CNEL

70 CNEL	65 CNEL	60 CNEL	55 CNEL
94.9	192.5	408.9	878.2

TABLE Existing with Project-04
FHWA ROADWAY NOISE LEVEL ANALYSIS

RUN DATE: 10/08/2018
ROADWAY SEGMENT: Main Street between I-15 NB On/Off-Ramps and Mariposa Road
NOTES: Kaiser Permanente Medical Office Project - Existing with Project

---

* * ASSUMPTIONS * *

AVERAGE DAILY TRAFFIC: 41270 SPEED (MPH): 50 GRADE: .5

TRAFFIC DISTRIBUTION PERCENTAGES

	DAY	EVENING	NIGHT
AUTOS	75.51	12.57	9.34
M-TRUCKS	1.56	0.09	0.19
H-TRUCKS	0.64	0.02	0.08

ACTIVE HALF-WIDTH (FT): 36 SITE CHARACTERISTICS: SOFT

---

* * CALCULATED NOISE LEVELS * *

CNEL AT 50 FT FROM NEAR TRAVEL LANE CENTERLINE (dB) = 71.97

DISTANCE (FEET) FROM ROADWAY CENTERLINE TO CNEL

70 CNEL	65 CNEL	60 CNEL	55 CNEL
111.6	230.3	491.3	1056.0

TABLE Existing with Project-05
FHWA ROADWAY NOISE LEVEL ANALYSIS

RUN DATE: 10/08/2018
ROADWAY SEGMENT: Main Street between Mariposa Road and Escondido Avenue
NOTES: Kaiser Permanente Medical Office Project - Existing with Project

---

* * ASSUMPTIONS * *

AVERAGE DAILY TRAFFIC: 37350 SPEED (MPH): 50 GRADE: .5

TRAFFIC DISTRIBUTION PERCENTAGES

	DAY	EVENING	NIGHT
AUTOS	75.51	12.57	9.34
M-TRUCKS	1.56	0.09	0.19
H-TRUCKS	0.64	0.02	0.08

ACTIVE HALF-WIDTH (FT): 36 SITE CHARACTERISTICS: SOFT

---

* * CALCULATED NOISE LEVELS * *

CNEL AT 50 FT FROM NEAR TRAVEL LANE CENTERLINE (dB) = 71.53

DISTANCE (FEET) FROM ROADWAY CENTERLINE TO CNEL

70 CNEL	65 CNEL	60 CNEL	55 CNEL
105.2	215.8	459.8	988.1

TABLE Existing with Project-06
FHWA ROADWAY NOISE LEVEL ANALYSIS

RUN DATE: 10/08/2018
ROADWAY SEGMENT: Main Street between Escondido Avenue and Topaz Avenue
NOTES: Kaiser Permanente Medical Office Project - Existing with Project

---

* * ASSUMPTIONS * *

AVERAGE DAILY TRAFFIC: 30315 SPEED (MPH): 50 GRADE: .5

TRAFFIC DISTRIBUTION PERCENTAGES

	DAY	EVENING	NIGHT
AUTOS	75.51	12.57	9.34
M-TRUCKS	1.56	0.09	0.19
H-TRUCKS	0.64	0.02	0.08

ACTIVE HALF-WIDTH (FT): 24 SITE CHARACTERISTICS: SOFT

---

* * CALCULATED NOISE LEVELS * *

CNEL AT 50 FT FROM NEAR TRAVEL LANE CENTERLINE (dB) = 71.35

DISTANCE (FEET) FROM ROADWAY CENTERLINE TO CNEL

70 CNEL	65 CNEL	60 CNEL	55 CNEL
89.3	186.9	400.0	860.4

TABLE Existing with Project-07
FHWA ROADWAY NOISE LEVEL ANALYSIS

RUN DATE: 10/08/2018
ROADWAY SEGMENT: Main Street east of Topaz Avenue
NOTES: Kaiser Permanente Medical Office Project - Existing with Project

---

* * ASSUMPTIONS * *

AVERAGE DAILY TRAFFIC: 28450 SPEED (MPH): 50 GRADE: .5

TRAFFIC DISTRIBUTION PERCENTAGES

	DAY	EVENING	NIGHT
AUTOS	75.51	12.57	9.34
M-TRUCKS	1.56	0.09	0.19
H-TRUCKS	0.64	0.02	0.08

ACTIVE HALF-WIDTH (FT): 24 SITE CHARACTERISTICS: SOFT

---

* * CALCULATED NOISE LEVELS * *

CNEL AT 50 FT FROM NEAR TRAVEL LANE CENTERLINE (dB) = 71.07

DISTANCE (FEET) FROM ROADWAY CENTERLINE TO CNEL

70 CNEL	65 CNEL	60 CNEL	55 CNEL
85.9	179.3	383.5	824.8

TABLE Existing with Project-08
FHWA ROADWAY NOISE LEVEL ANALYSIS

RUN DATE: 10/08/2018
ROADWAY SEGMENT: Escondido Avenue between Main Street and Major Place
NOTES: Kaiser Permanente Medical Office Project - Existing with Project

---

* * ASSUMPTIONS * *

AVERAGE DAILY TRAFFIC: 20065 SPEED (MPH): 50 GRADE: .5

TRAFFIC DISTRIBUTION PERCENTAGES

	DAY	EVENING	NIGHT
AUTOS	75.51	12.57	9.34
M-TRUCKS	1.56	0.09	0.19
H-TRUCKS	0.64	0.02	0.08

ACTIVE HALF-WIDTH (FT): 24 SITE CHARACTERISTICS: SOFT

---

* * CALCULATED NOISE LEVELS * *

CNEL AT 50 FT FROM NEAR TRAVEL LANE CENTERLINE (dB) = 69.56

DISTANCE (FEET) FROM ROADWAY CENTERLINE TO CNEL

70 CNEL	65 CNEL	60 CNEL	55 CNEL
69.6	142.8	304.2	653.7

TABLE Existing with Project-09
FHWA ROADWAY NOISE LEVEL ANALYSIS

RUN DATE: 10/08/2018
ROADWAY SEGMENT: Escondido Avenue between Major Place and Sultana Street
NOTES: Kaiser Permanente Medical Office Project - Existing with Project

---

* * ASSUMPTIONS * *

AVERAGE DAILY TRAFFIC: 17225 SPEED (MPH): 50 GRADE: .5

TRAFFIC DISTRIBUTION PERCENTAGES

	DAY	EVENING	NIGHT
AUTOS	75.51	12.57	9.34
M-TRUCKS	1.56	0.09	0.19
H-TRUCKS	0.64	0.02	0.08

ACTIVE HALF-WIDTH (FT): 24 SITE CHARACTERISTICS: SOFT

---

* * CALCULATED NOISE LEVELS * *

CNEL AT 50 FT FROM NEAR TRAVEL LANE CENTERLINE (dB) = 68.89

DISTANCE (FEET) FROM ROADWAY CENTERLINE TO CNEL

70 CNEL	65 CNEL	60 CNEL	55 CNEL
63.7	129.4	275.0	590.5

TABLE Existing with Project-10
FHWA ROADWAY NOISE LEVEL ANALYSIS

RUN DATE: 10/08/2018
ROADWAY SEGMENT: Escondido Avenue south of Sultana Street
NOTES: Kaiser Permanente Medical Office Project - Existing with Project

---

* * ASSUMPTIONS * *

AVERAGE DAILY TRAFFIC: 13700 SPEED (MPH): 50 GRADE: .5

TRAFFIC DISTRIBUTION PERCENTAGES

	DAY	EVENING	NIGHT
AUTOS	75.51	12.57	9.34
M-TRUCKS	1.56	0.09	0.19
H-TRUCKS	0.64	0.02	0.08

ACTIVE HALF-WIDTH (FT): 24 SITE CHARACTERISTICS: SOFT

---

* * CALCULATED NOISE LEVELS * *

CNEL AT 50 FT FROM NEAR TRAVEL LANE CENTERLINE (dB) = 67.90

DISTANCE (FEET) FROM ROADWAY CENTERLINE TO CNEL

70 CNEL	65 CNEL	60 CNEL	55 CNEL
56.1	111.8	236.4	507.1

TABLE Existing with Project-11
FHWA ROADWAY NOISE LEVEL ANALYSIS

RUN DATE: 10/08/2018
ROADWAY SEGMENT: Mariposa Road south of Main Street
NOTES: Kaiser Permanente Medical Office Project - Existing with Project

---

* * ASSUMPTIONS * *

AVERAGE DAILY TRAFFIC: 3750 SPEED (MPH): 50 GRADE: .5

TRAFFIC DISTRIBUTION PERCENTAGES

	DAY	EVENING	NIGHT
AUTOS	75.51	12.57	9.34
M-TRUCKS	1.56	0.09	0.19
H-TRUCKS	0.64	0.02	0.08

ACTIVE HALF-WIDTH (FT): 6 SITE CHARACTERISTICS: SOFT

---

* * CALCULATED NOISE LEVELS * *

CNEL AT 50 FT FROM NEAR TRAVEL LANE CENTERLINE (dB) = 63.77

DISTANCE (FEET) FROM ROADWAY CENTERLINE TO CNEL

70 CNEL	65 CNEL	60 CNEL	55 CNEL
0.0	0.0	99.5	214.1

TABLE Existing with Project-12
FHWA ROADWAY NOISE LEVEL ANALYSIS

RUN DATE: 10/08/2018
ROADWAY SEGMENT: I-15 North of Main Street
NOTES: Kaiser Permanente Medical Office Project - Existing with Project

---

* * ASSUMPTIONS * *

AVERAGE DAILY TRAFFIC: 46160 SPEED (MPH): 70 GRADE: .5

TRAFFIC DISTRIBUTION PERCENTAGES

	DAY	EVENING	NIGHT
AUTOS	65.40	10.89	8.09
M-TRUCKS	3.07	0.18	0.37
H-TRUCKS	10.38	0.32	1.30

ACTIVE HALF-WIDTH (FT): 36 SITE CHARACTERISTICS: SOFT

---

* * CALCULATED NOISE LEVELS * *

CNEL AT 50 FT FROM NEAR TRAVEL LANE CENTERLINE (dB) = 80.59

DISTANCE (FEET) FROM ROADWAY CENTERLINE TO CNEL

70 CNEL	65 CNEL	60 CNEL	55 CNEL
398.4	855.5	1841.4	3965.9

TABLE Existing with Project-13
FHWA ROADWAY NOISE LEVEL ANALYSIS

RUN DATE: 10/08/2018
ROADWAY SEGMENT: I-15 South of Main Street
NOTES: Kaiser Permanente Medical Office Project - Existing with Project

---

* * ASSUMPTIONS * *

AVERAGE DAILY TRAFFIC: 62640 SPEED (MPH): 70 GRADE: .5

TRAFFIC DISTRIBUTION PERCENTAGES

	DAY	EVENING	NIGHT
AUTOS	65.40	10.89	8.09
M-TRUCKS	3.07	0.18	0.37
H-TRUCKS	10.38	0.32	1.30

ACTIVE HALF-WIDTH (FT): 36 SITE CHARACTERISTICS: SOFT

---

* * CALCULATED NOISE LEVELS * *

CNEL AT 50 FT FROM NEAR TRAVEL LANE CENTERLINE (dB) = 81.92

DISTANCE (FEET) FROM ROADWAY CENTERLINE TO CNEL

70 CNEL	65 CNEL	60 CNEL	55 CNEL
487.7	1048.3	2256.9	4861.0

TABLE 2020 Cumulative w/o Project-01
FHWA ROADWAY NOISE LEVEL ANALYSIS

RUN DATE: 10/08/2018
ROADWAY SEGMENT: Main Street west of Key Point Avenue
NOTES: Kaiser Permanente Medical Office Project - 2020 Cumulative w/o Project

---

* * ASSUMPTIONS * *

AVERAGE DAILY TRAFFIC: 22250 SPEED (MPH): 55 GRADE: .5

TRAFFIC DISTRIBUTION PERCENTAGES

	DAY	EVENING	NIGHT
AUTOS	75.51	12.57	9.34
M-TRUCKS	1.56	0.09	0.19
H-TRUCKS	0.64	0.02	0.08

ACTIVE HALF-WIDTH (FT): 36 SITE CHARACTERISTICS: SOFT

---

* * CALCULATED NOISE LEVELS * *

CNEL AT 50 FT FROM NEAR TRAVEL LANE CENTERLINE (dB) = 70.33

DISTANCE (FEET) FROM ROADWAY CENTERLINE TO CNEL

70 CNEL	65 CNEL	60 CNEL	55 CNEL
89.7	180.7	383.1	822.3

TABLE 2020 Cumulative w/o Project-02
FHWA ROADWAY NOISE LEVEL ANALYSIS

RUN DATE: 10/08/2018
ROADWAY SEGMENT: Main Street between Key Point Avenue and I-15 SB Off-Ramp
NOTES: Kaiser Permanente Medical Office Project - 2020 Cumulative w/o Project

---

* * ASSUMPTIONS * *

AVERAGE DAILY TRAFFIC: 31680 SPEED (MPH): 50 GRADE: .5

TRAFFIC DISTRIBUTION PERCENTAGES

	DAY	EVENING	NIGHT
AUTOS	75.51	12.57	9.34
M-TRUCKS	1.56	0.09	0.19
H-TRUCKS	0.64	0.02	0.08

ACTIVE HALF-WIDTH (FT): 36 SITE CHARACTERISTICS: SOFT

---

* * CALCULATED NOISE LEVELS * *

CNEL AT 50 FT FROM NEAR TRAVEL LANE CENTERLINE (dB) = 70.82

DISTANCE (FEET) FROM ROADWAY CENTERLINE TO CNEL

70 CNEL	65 CNEL	60 CNEL	55 CNEL
95.6	194.1	412.3	885.5

TABLE 2020 Cumulative w/o Project-03
FHWA ROADWAY NOISE LEVEL ANALYSIS

RUN DATE: 10/08/2018
ROADWAY SEGMENT: Main Street between I-15 SB Off-Ramp and I-15 NB On/Off-Ramps
NOTES: Kaiser Permanente Medical Office Project - 2020 Cumulative w/o Project

---

* * ASSUMPTIONS * *

AVERAGE DAILY TRAFFIC: 37725 SPEED (MPH): 50 GRADE: .5

TRAFFIC DISTRIBUTION PERCENTAGES

	DAY	EVENING	NIGHT
AUTOS	75.51	12.57	9.34
M-TRUCKS	1.56	0.09	0.19
H-TRUCKS	0.64	0.02	0.08

ACTIVE HALF-WIDTH (FT): 36 SITE CHARACTERISTICS: SOFT

---

* * CALCULATED NOISE LEVELS * *

CNEL AT 50 FT FROM NEAR TRAVEL LANE CENTERLINE (dB) = 71.58

DISTANCE (FEET) FROM ROADWAY CENTERLINE TO CNEL

70 CNEL	65 CNEL	60 CNEL	55 CNEL
105.8	217.3	462.9	994.7

TABLE 2020 Cumulative w/o Project-04
FHWA ROADWAY NOISE LEVEL ANALYSIS

RUN DATE: 10/08/2018
ROADWAY SEGMENT: Main Street between I-15 NB On/Off-Ramps and Mariposa Road
NOTES: Kaiser Permanente Medical Office Project - 2020 Cumulative w/o Project

---

* * ASSUMPTIONS * *

AVERAGE DAILY TRAFFIC: 49835 SPEED (MPH): 50 GRADE: .5

TRAFFIC DISTRIBUTION PERCENTAGES

	DAY	EVENING	NIGHT
AUTOS	75.51	12.57	9.34
M-TRUCKS	1.56	0.09	0.19
H-TRUCKS	0.64	0.02	0.08

ACTIVE HALF-WIDTH (FT): 36 SITE CHARACTERISTICS: SOFT

---

* * CALCULATED NOISE LEVELS * *

CNEL AT 50 FT FROM NEAR TRAVEL LANE CENTERLINE (dB) = 72.79

DISTANCE (FEET) FROM ROADWAY CENTERLINE TO CNEL

70 CNEL	65 CNEL	60 CNEL	55 CNEL
125.0	260.4	556.8	1197.3

TABLE 2020 Cumulative w/o Project-05
FHWA ROADWAY NOISE LEVEL ANALYSIS

RUN DATE: 10/08/2018
ROADWAY SEGMENT: Main Street between Mariposa Road and Escondido Avenue
NOTES: Kaiser Permanente Medical Office Project - 2020 Cumulative w/o Project

---

* * ASSUMPTIONS * *

AVERAGE DAILY TRAFFIC: 43580 SPEED (MPH): 50 GRADE: .5

TRAFFIC DISTRIBUTION PERCENTAGES

	DAY	EVENING	NIGHT
AUTOS	75.51	12.57	9.34
M-TRUCKS	1.56	0.09	0.19
H-TRUCKS	0.64	0.02	0.08

ACTIVE HALF-WIDTH (FT): 36 SITE CHARACTERISTICS: SOFT

---

* * CALCULATED NOISE LEVELS * *

CNEL AT 50 FT FROM NEAR TRAVEL LANE CENTERLINE (dB) = 72.20

DISTANCE (FEET) FROM ROADWAY CENTERLINE TO CNEL

70 CNEL	65 CNEL	60 CNEL	55 CNEL
115.3	238.6	509.4	1095.0

TABLE 2020 Cumulative w/o Project-06
FHWA ROADWAY NOISE LEVEL ANALYSIS

RUN DATE: 10/08/2018
ROADWAY SEGMENT: Main Street between Escondido Avenue and Topaz Avenue
NOTES: Kaiser Permanente Medical Office Project - 2020 Cumulative w/o Project

---

* * ASSUMPTIONS * *

AVERAGE DAILY TRAFFIC: 35450 SPEED (MPH): 50 GRADE: .5

TRAFFIC DISTRIBUTION PERCENTAGES

	DAY	EVENING	NIGHT
AUTOS	75.51	12.57	9.34
M-TRUCKS	1.56	0.09	0.19
H-TRUCKS	0.64	0.02	0.08

ACTIVE HALF-WIDTH (FT): 24 SITE CHARACTERISTICS: SOFT

---

* * CALCULATED NOISE LEVELS * *

CNEL AT 50 FT FROM NEAR TRAVEL LANE CENTERLINE (dB) = 72.03

DISTANCE (FEET) FROM ROADWAY CENTERLINE TO CNEL

70 CNEL	65 CNEL	60 CNEL	55 CNEL
98.5	207.2	443.9	955.0

TABLE 2020 Cumulative w/o Project-07
FHWA ROADWAY NOISE LEVEL ANALYSIS

RUN DATE: 10/08/2018
ROADWAY SEGMENT: Main Street east of Topaz Avenue
NOTES: Kaiser Permanente Medical Office Project - 2020 Cumulative w/o Project

---

* * ASSUMPTIONS * *

AVERAGE DAILY TRAFFIC: 32220 SPEED (MPH): 50 GRADE: .5

TRAFFIC DISTRIBUTION PERCENTAGES

	DAY	EVENING	NIGHT
AUTOS	75.51	12.57	9.34
M-TRUCKS	1.56	0.09	0.19
H-TRUCKS	0.64	0.02	0.08

ACTIVE HALF-WIDTH (FT): 24 SITE CHARACTERISTICS: SOFT

---

* * CALCULATED NOISE LEVELS * *

CNEL AT 50 FT FROM NEAR TRAVEL LANE CENTERLINE (dB) = 71.61

DISTANCE (FEET) FROM ROADWAY CENTERLINE TO CNEL

70 CNEL	65 CNEL	60 CNEL	55 CNEL
92.8	194.6	416.6	896.1

TABLE 2020 Cumulative w/o Project-08
FHWA ROADWAY NOISE LEVEL ANALYSIS

RUN DATE: 10/08/2018
ROADWAY SEGMENT: Escondido Avenue between Main Street and Major Place
NOTES: Kaiser Permanente Medical Office Project - 2020 Cumulative w/o Project

---

* * ASSUMPTIONS * *

AVERAGE DAILY TRAFFIC: 20880 SPEED (MPH): 50 GRADE: .5

TRAFFIC DISTRIBUTION PERCENTAGES

	DAY	EVENING	NIGHT
AUTOS	75.51	12.57	9.34
M-TRUCKS	1.56	0.09	0.19
H-TRUCKS	0.64	0.02	0.08

ACTIVE HALF-WIDTH (FT): 24 SITE CHARACTERISTICS: SOFT

---

* * CALCULATED NOISE LEVELS * *

CNEL AT 50 FT FROM NEAR TRAVEL LANE CENTERLINE (dB) = 69.73

DISTANCE (FEET) FROM ROADWAY CENTERLINE TO CNEL

70 CNEL	65 CNEL	60 CNEL	55 CNEL
71.3	146.6	312.4	671.3

TABLE 2020 Cumulative w/o Project-09
FHWA ROADWAY NOISE LEVEL ANALYSIS

RUN DATE: 10/08/2018
ROADWAY SEGMENT: Escondido Avenue between Major Place and Sultana Street
NOTES: Kaiser Permanente Medical Office Project - 2020 Cumulative w/o Project

---

* * ASSUMPTIONS * *

AVERAGE DAILY TRAFFIC: 19535 SPEED (MPH): 50 GRADE: .5

TRAFFIC DISTRIBUTION PERCENTAGES

	DAY	EVENING	NIGHT
AUTOS	75.51	12.57	9.34
M-TRUCKS	1.56	0.09	0.19
H-TRUCKS	0.64	0.02	0.08

ACTIVE HALF-WIDTH (FT): 24 SITE CHARACTERISTICS: SOFT

---

* * CALCULATED NOISE LEVELS * *

CNEL AT 50 FT FROM NEAR TRAVEL LANE CENTERLINE (dB) = 69.44

DISTANCE (FEET) FROM ROADWAY CENTERLINE TO CNEL

70 CNEL	65 CNEL	60 CNEL	55 CNEL
68.5	140.4	298.9	642.1

TABLE 2020 Cumulative w/o Project-10
FHWA ROADWAY NOISE LEVEL ANALYSIS

RUN DATE: 10/08/2018
ROADWAY SEGMENT: Escondido Avenue south of Sultana Street
NOTES: Kaiser Permanente Medical Office Project - 2020 Cumulative w/o Project

---

* * ASSUMPTIONS * *

AVERAGE DAILY TRAFFIC: 16070 SPEED (MPH): 50 GRADE: .5

TRAFFIC DISTRIBUTION PERCENTAGES

	DAY	EVENING	NIGHT
AUTOS	75.51	12.57	9.34
M-TRUCKS	1.56	0.09	0.19
H-TRUCKS	0.64	0.02	0.08

ACTIVE HALF-WIDTH (FT): 24 SITE CHARACTERISTICS: SOFT

---

* * CALCULATED NOISE LEVELS * *

CNEL AT 50 FT FROM NEAR TRAVEL LANE CENTERLINE (dB) = 68.59

DISTANCE (FEET) FROM ROADWAY CENTERLINE TO CNEL

70 CNEL	65 CNEL	60 CNEL	55 CNEL
61.3	123.8	262.6	563.9

TABLE 2020 Cumulative w/o Project-11
FHWA ROADWAY NOISE LEVEL ANALYSIS

RUN DATE: 10/08/2018
ROADWAY SEGMENT: Mariposa Road south of Main Street
NOTES: Kaiser Permanente Medical Office Project - 2020 Cumulative w/o Project

---

* * ASSUMPTIONS * *

AVERAGE DAILY TRAFFIC: 4020 SPEED (MPH): 50 GRADE: .5

TRAFFIC DISTRIBUTION PERCENTAGES

	DAY	EVENING	NIGHT
AUTOS	75.51	12.57	9.34
M-TRUCKS	1.56	0.09	0.19
H-TRUCKS	0.64	0.02	0.08

ACTIVE HALF-WIDTH (FT): 6 SITE CHARACTERISTICS: SOFT

---

* * CALCULATED NOISE LEVELS * *

CNEL AT 50 FT FROM NEAR TRAVEL LANE CENTERLINE (dB) = 64.08

DISTANCE (FEET) FROM ROADWAY CENTERLINE TO CNEL

70 CNEL	65 CNEL	60 CNEL	55 CNEL
0.0	0.0	104.3	224.3

TABLE 2020 Cumulative w/o Project-12
FHWA ROADWAY NOISE LEVEL ANALYSIS

RUN DATE: 10/08/2018
ROADWAY SEGMENT: I-15 North of Main Street
NOTES: Kaiser Permanente Medical Office Project - 2020 Cumulative w/o Project

---

* * ASSUMPTIONS * *

AVERAGE DAILY TRAFFIC: 47410 SPEED (MPH): 70 GRADE: .5

TRAFFIC DISTRIBUTION PERCENTAGES

	DAY	EVENING	NIGHT
AUTOS	65.40	10.89	8.09
M-TRUCKS	3.07	0.18	0.37
H-TRUCKS	10.38	0.32	1.30

ACTIVE HALF-WIDTH (FT): 36 SITE CHARACTERISTICS: SOFT

---

* * CALCULATED NOISE LEVELS * *

CNEL AT 50 FT FROM NEAR TRAVEL LANE CENTERLINE (dB) = 80.71

DISTANCE (FEET) FROM ROADWAY CENTERLINE TO CNEL

70 CNEL	65 CNEL	60 CNEL	55 CNEL
405.5	870.8	1874.5	4037.1

TABLE 2020 Cumulative w/o Project-13
FHWA ROADWAY NOISE LEVEL ANALYSIS

RUN DATE: 10/08/2018
ROADWAY SEGMENT: I-15 South of Main Street
NOTES: Kaiser Permanente Medical Office Project - 2020 Cumulative w/o Project

---

* * ASSUMPTIONS * *

AVERAGE DAILY TRAFFIC: 64560 SPEED (MPH): 70 GRADE: .5

TRAFFIC DISTRIBUTION PERCENTAGES

	DAY	EVENING	NIGHT
AUTOS	65.40	10.89	8.09
M-TRUCKS	3.07	0.18	0.37
H-TRUCKS	10.38	0.32	1.30

ACTIVE HALF-WIDTH (FT): 36 SITE CHARACTERISTICS: SOFT

---

* * CALCULATED NOISE LEVELS * *

CNEL AT 50 FT FROM NEAR TRAVEL LANE CENTERLINE (dB) = 82.05

DISTANCE (FEET) FROM ROADWAY CENTERLINE TO CNEL

70 CNEL	65 CNEL	60 CNEL	55 CNEL
497.6	1069.6	2302.8	4959.8

TABLE 2020 Cumulative with Project-01

FHWA ROADWAY NOISE LEVEL ANALYSIS

RUN DATE: 10/08/2018
ROADWAY SEGMENT: Main Street west of Key Point Avenue
NOTES: Kaiser Permanente Medical Office Project - 2020 Cumulative with Project

---

* * ASSUMPTIONS * *

AVERAGE DAILY TRAFFIC: 22540 SPEED (MPH): 55 GRADE: .5

TRAFFIC DISTRIBUTION PERCENTAGES

	DAY	EVENING	NIGHT
AUTOS	75.51	12.57	9.34
M-TRUCKS	1.56	0.09	0.19
H-TRUCKS	0.64	0.02	0.08

ACTIVE HALF-WIDTH (FT): 36 SITE CHARACTERISTICS: SOFT

---

* * CALCULATED NOISE LEVELS * *

CNEL AT 50 FT FROM NEAR TRAVEL LANE CENTERLINE (dB) = 70.39

DISTANCE (FEET) FROM ROADWAY CENTERLINE TO CNEL

70 CNEL	65 CNEL	60 CNEL	55 CNEL
90.4	182.2	386.4	829.4

TABLE 2020 Cumulative with Project-02

FHWA ROADWAY NOISE LEVEL ANALYSIS

RUN DATE: 10/08/2018
ROADWAY SEGMENT: Main Street between Key Point Avenue and I-15 SB Off-Ramp
NOTES: Kaiser Permanente Medical Office Project - 2020 Cumulative with Project

---

* * ASSUMPTIONS * *

AVERAGE DAILY TRAFFIC: 31970 SPEED (MPH): 50 GRADE: .5

TRAFFIC DISTRIBUTION PERCENTAGES

	DAY	EVENING	NIGHT
AUTOS	75.51	12.57	9.34
M-TRUCKS	1.56	0.09	0.19
H-TRUCKS	0.64	0.02	0.08

ACTIVE HALF-WIDTH (FT): 36 SITE CHARACTERISTICS: SOFT

---

* * CALCULATED NOISE LEVELS * *

CNEL AT 50 FT FROM NEAR TRAVEL LANE CENTERLINE (dB) = 70.86

DISTANCE (FEET) FROM ROADWAY CENTERLINE TO CNEL

70 CNEL	65 CNEL	60 CNEL	55 CNEL
96.1	195.2	414.8	890.9

TABLE 2020 Cumulative with Project-03

FHWA ROADWAY NOISE LEVEL ANALYSIS

RUN DATE: 10/08/2018
ROADWAY SEGMENT: Main Street between I-15 SB Off-Ramp and I-15 NB On/Off-Ramps
NOTES: Kaiser Permanente Medical Office Project - 2020 Cumulative with Project

---

* * ASSUMPTIONS * *

AVERAGE DAILY TRAFFIC: 38605 SPEED (MPH): 50 GRADE: .5

TRAFFIC DISTRIBUTION PERCENTAGES

	DAY	EVENING	NIGHT
AUTOS	75.51	12.57	9.34
M-TRUCKS	1.56	0.09	0.19
H-TRUCKS	0.64	0.02	0.08

ACTIVE HALF-WIDTH (FT): 36 SITE CHARACTERISTICS: SOFT

---

* * CALCULATED NOISE LEVELS * *

CNEL AT 50 FT FROM NEAR TRAVEL LANE CENTERLINE (dB) = 71.68

DISTANCE (FEET) FROM ROADWAY CENTERLINE TO CNEL

70 CNEL	65 CNEL	60 CNEL	55 CNEL
107.2	220.5	470.0	1010.1

TABLE 2020 Cumulative with Project-04

FHWA ROADWAY NOISE LEVEL ANALYSIS

RUN DATE: 10/08/2018
ROADWAY SEGMENT: Main Street between I-15 NB On/Off-Ramps and Mariposa Road
NOTES: Kaiser Permanente Medical Office Project - 2020 Cumulative with Project

---

* * ASSUMPTIONS * *

AVERAGE DAILY TRAFFIC: 51305 SPEED (MPH): 50 GRADE: .5

TRAFFIC DISTRIBUTION PERCENTAGES

	DAY	EVENING	NIGHT
AUTOS	75.51	12.57	9.34
M-TRUCKS	1.56	0.09	0.19
H-TRUCKS	0.64	0.02	0.08

ACTIVE HALF-WIDTH (FT): 36 SITE CHARACTERISTICS: SOFT

---

* * CALCULATED NOISE LEVELS * *

CNEL AT 50 FT FROM NEAR TRAVEL LANE CENTERLINE (dB) = 72.91

DISTANCE (FEET) FROM ROADWAY CENTERLINE TO CNEL

70 CNEL	65 CNEL	60 CNEL	55 CNEL
127.3	265.4	567.6	1220.7

TABLE 2020 Cumulative with Project-05

FHWA ROADWAY NOISE LEVEL ANALYSIS

RUN DATE: 10/08/2018
ROADWAY SEGMENT: Main Street between Mariposa Road and Escondido Avenue
NOTES: Kaiser Permanente Medical Office Project - 2020 Cumulative with Project

---

* * ASSUMPTIONS * *

AVERAGE DAILY TRAFFIC: 45050 SPEED (MPH): 50 GRADE: .5

TRAFFIC DISTRIBUTION PERCENTAGES

	DAY	EVENING	NIGHT
AUTOS	75.51	12.57	9.34
M-TRUCKS	1.56	0.09	0.19
H-TRUCKS	0.64	0.02	0.08

ACTIVE HALF-WIDTH (FT): 36 SITE CHARACTERISTICS: SOFT

---

* * CALCULATED NOISE LEVELS * *

CNEL AT 50 FT FROM NEAR TRAVEL LANE CENTERLINE (dB) = 72.35

DISTANCE (FEET) FROM ROADWAY CENTERLINE TO CNEL

70 CNEL	65 CNEL	60 CNEL	55 CNEL
117.6	243.8	520.7	1119.5

TABLE 2020 Cumulative with Project-06

FHWA ROADWAY NOISE LEVEL ANALYSIS

RUN DATE: 10/08/2018
ROADWAY SEGMENT: Main Street between Escondido Avenue and Topaz Avenue
NOTES: Kaiser Permanente Medical Office Project - 2020 Cumulative with Project

---

* * ASSUMPTIONS * *

AVERAGE DAILY TRAFFIC: 35840 SPEED (MPH): 50 GRADE: .5

TRAFFIC DISTRIBUTION PERCENTAGES

	DAY	EVENING	NIGHT
AUTOS	75.51	12.57	9.34
M-TRUCKS	1.56	0.09	0.19
H-TRUCKS	0.64	0.02	0.08

ACTIVE HALF-WIDTH (FT): 24 SITE CHARACTERISTICS: SOFT

---

* * CALCULATED NOISE LEVELS * *

CNEL AT 50 FT FROM NEAR TRAVEL LANE CENTERLINE (dB) = 72.07

DISTANCE (FEET) FROM ROADWAY CENTERLINE TO CNEL

70 CNEL	65 CNEL	60 CNEL	55 CNEL
99.2	208.7	447.1	962.0

TABLE 2020 Cumulative with Project-07

FHWA ROADWAY NOISE LEVEL ANALYSIS

RUN DATE: 10/08/2018
ROADWAY SEGMENT: Main Street east of Topaz Avenue
NOTES: Kaiser Permanente Medical Office Project - 2020 Cumulative with Project

---

* * ASSUMPTIONS * *

AVERAGE DAILY TRAFFIC: 32610 SPEED (MPH): 50 GRADE: .5

TRAFFIC DISTRIBUTION PERCENTAGES

	DAY	EVENING	NIGHT
AUTOS	75.51	12.57	9.34
M-TRUCKS	1.56	0.09	0.19
H-TRUCKS	0.64	0.02	0.08

ACTIVE HALF-WIDTH (FT): 24 SITE CHARACTERISTICS: SOFT

---

* * CALCULATED NOISE LEVELS * *

CNEL AT 50 FT FROM NEAR TRAVEL LANE CENTERLINE (dB) = 71.66

DISTANCE (FEET) FROM ROADWAY CENTERLINE TO CNEL

70 CNEL	65 CNEL	60 CNEL	55 CNEL
93.5	196.1	419.9	903.3

TABLE 2020 Cumulative with Project-08

FHWA ROADWAY NOISE LEVEL ANALYSIS

RUN DATE: 10/08/2018
ROADWAY SEGMENT: Escondido Avenue between Main Street and Major Place
NOTES: Kaiser Permanente Medical Office Project - 2020 Cumulative with Project

---

* * ASSUMPTIONS * *

AVERAGE DAILY TRAFFIC: 22745 SPEED (MPH): 50 GRADE: .5

TRAFFIC DISTRIBUTION PERCENTAGES

	DAY	EVENING	NIGHT
AUTOS	75.51	12.57	9.34
M-TRUCKS	1.56	0.09	0.19
H-TRUCKS	0.64	0.02	0.08

ACTIVE HALF-WIDTH (FT): 24 SITE CHARACTERISTICS: SOFT

---

* * CALCULATED NOISE LEVELS * *

CNEL AT 50 FT FROM NEAR TRAVEL LANE CENTERLINE (dB) = 70.10

DISTANCE (FEET) FROM ROADWAY CENTERLINE TO CNEL

70 CNEL	65 CNEL	60 CNEL	55 CNEL
75.0	154.9	330.6	710.6

TABLE 2020 Cumulative with Project-09

FHWA ROADWAY NOISE LEVEL ANALYSIS

RUN DATE: 10/08/2018
ROADWAY SEGMENT: Escondido Avenue between Major Place and Sultana Street
NOTES: Kaiser Permanente Medical Office Project - 2020 Cumulative with Project

---

* * ASSUMPTIONS * *

AVERAGE DAILY TRAFFIC: 19830 SPEED (MPH): 50 GRADE: .5

TRAFFIC DISTRIBUTION PERCENTAGES

	DAY	EVENING	NIGHT
AUTOS	75.51	12.57	9.34
M-TRUCKS	1.56	0.09	0.19
H-TRUCKS	0.64	0.02	0.08

ACTIVE HALF-WIDTH (FT): 24 SITE CHARACTERISTICS: SOFT

---

* * CALCULATED NOISE LEVELS * *

CNEL AT 50 FT FROM NEAR TRAVEL LANE CENTERLINE (dB) = 69.50

DISTANCE (FEET) FROM ROADWAY CENTERLINE TO CNEL

70 CNEL	65 CNEL	60 CNEL	55 CNEL
69.1	141.7	301.9	648.6

TABLE 2020 Cumulative with Project-10

FHWA ROADWAY NOISE LEVEL ANALYSIS

RUN DATE: 10/08/2018
ROADWAY SEGMENT: Escondido Avenue south of Sultana Street
NOTES: Kaiser Permanente Medical Office Project - 2020 Cumulative with Project

---

* * ASSUMPTIONS * *

AVERAGE DAILY TRAFFIC: 16170 SPEED (MPH): 50 GRADE: .5

TRAFFIC DISTRIBUTION PERCENTAGES

	DAY	EVENING	NIGHT
AUTOS	75.51	12.57	9.34
M-TRUCKS	1.56	0.09	0.19
H-TRUCKS	0.64	0.02	0.08

ACTIVE HALF-WIDTH (FT): 24 SITE CHARACTERISTICS: SOFT

---

* * CALCULATED NOISE LEVELS * *

CNEL AT 50 FT FROM NEAR TRAVEL LANE CENTERLINE (dB) = 68.62

DISTANCE (FEET) FROM ROADWAY CENTERLINE TO CNEL

70 CNEL	65 CNEL	60 CNEL	55 CNEL
61.5	124.3	263.7	566.2

TABLE 2020 Cumulative with Project-11

FHWA ROADWAY NOISE LEVEL ANALYSIS

RUN DATE: 10/08/2018
ROADWAY SEGMENT: Mariposa Road south of Main Street
NOTES: Kaiser Permanente Medical Office Project - 2020 Cumulative with Project

---

* * ASSUMPTIONS * *

AVERAGE DAILY TRAFFIC: 4020 SPEED (MPH): 50 GRADE: .5

TRAFFIC DISTRIBUTION PERCENTAGES

	DAY	EVENING	NIGHT
AUTOS	75.51	12.57	9.34
M-TRUCKS	1.56	0.09	0.19
H-TRUCKS	0.64	0.02	0.08

ACTIVE HALF-WIDTH (FT): 6 SITE CHARACTERISTICS: SOFT

---

* * CALCULATED NOISE LEVELS * *

CNEL AT 50 FT FROM NEAR TRAVEL LANE CENTERLINE (dB) = 64.08

DISTANCE (FEET) FROM ROADWAY CENTERLINE TO CNEL

70 CNEL	65 CNEL	60 CNEL	55 CNEL
0.0	0.0	104.3	224.3

TABLE 2020 Cumulative with Project-12

FHWA ROADWAY NOISE LEVEL ANALYSIS

RUN DATE: 10/08/2018
ROADWAY SEGMENT: I-15 North of Main Street
NOTES: Kaiser Permanente Medical Office Project - 2020 Cumulative with Project

---

* * ASSUMPTIONS * *

AVERAGE DAILY TRAFFIC: 48000 SPEED (MPH): 70 GRADE: .5

TRAFFIC DISTRIBUTION PERCENTAGES

	DAY	EVENING	NIGHT
AUTOS	65.40	10.89	8.09
M-TRUCKS	3.07	0.18	0.37
H-TRUCKS	10.38	0.32	1.30

ACTIVE HALF-WIDTH (FT): 36 SITE CHARACTERISTICS: SOFT

---

* * CALCULATED NOISE LEVELS * *

CNEL AT 50 FT FROM NEAR TRAVEL LANE CENTERLINE (dB) = 80.76

DISTANCE (FEET) FROM ROADWAY CENTERLINE TO CNEL

70 CNEL	65 CNEL	60 CNEL	55 CNEL
408.9	878.0	1890.0	4070.6

TABLE 2020 Cumulative with Project-13

FHWA ROADWAY NOISE LEVEL ANALYSIS

RUN DATE: 10/08/2018
ROADWAY SEGMENT: I-15 South of Main Street
NOTES: Kaiser Permanente Medical Office Project - 2020 Cumulative with Project

---

* * ASSUMPTIONS * *

AVERAGE DAILY TRAFFIC: 65150 SPEED (MPH): 70 GRADE: .5

TRAFFIC DISTRIBUTION PERCENTAGES

	DAY	EVENING	NIGHT
AUTOS	65.40	10.89	8.09
M-TRUCKS	3.07	0.18	0.37
H-TRUCKS	10.38	0.32	1.30

ACTIVE HALF-WIDTH (FT): 36 SITE CHARACTERISTICS: SOFT

---

* * CALCULATED NOISE LEVELS * *

CNEL AT 50 FT FROM NEAR TRAVEL LANE CENTERLINE (dB) = 82.09

DISTANCE (FEET) FROM ROADWAY CENTERLINE TO CNEL

70 CNEL	65 CNEL	60 CNEL	55 CNEL
500.6	1076.1	2316.8	4989.9

LINSCOTT
LAW &
GREENSPAN
engineers

TRAFFIC IMPACT STUDY

KAISER PERMANENTE HESPERIA

MEDICAL OFFICE BUILDING PROJECT

City of Hesperia, California
October 23, 2018

Prepared for:

Kaiser Permanente
National Facilities Services, Southern California
393 East Walnut Street, 4th Floor 043W03
Pasadena, California 91188

LLG Ref. 1-17-4246-1

REGISTERED PROFESSIONAL ENGINEER
CLARE M. LOOK-JAEGER
TR1878
EXP. 06/30/19
TRAFFIC
STATE OF CALIFORNIA

Prepared by:

Francesca Sevilla Bravo

Francesca S. Bravo
Transportation Engineer III

Under the Supervision of:

Clare M. Look-Jaeger

Clare M. Look-Jaeger, P.E.
Principal

Linscott, Law & Greenspan, Engineers

600 S. Lake Avenue
Suite 500
Pasadena, CA 91106

626.796.2322 T
626.792.0941 F
www.llgengineers.com

TABLE OF CONTENTS

SECTION		PAGE
1.0	**Introduction**	**1**
1.1	Traffic Study Overview	1
1.2	Study Area	1
1.3	Overview of Senate Bill 743	3
2.0	**Project Description**	**5**
2.1	Existing Project Site	5
2.2	Proposed Project Description	5
3.0	**Site Access and Circulation**	**9**
3.1	Existing Site Access	9
3.2	Proposed Project Site Access	9
3.3	Pedestrian Access	10
4.0	**Existing Street System**	**11**
4.1	Regional Highway System	11
4.2	Local Street System	11
4.3	Roadway Classifications	11
4.4	Roadway Descriptions	14
4.5	Transit Services	14
5.0	**Traffic Counts**	**18**
6.0	**Cumulative Development Projects**	**22**
6.1	Related Projects	22
6.2	Ambient Traffic Growth Factor	29
7.0	**Traffic Forecasting Methodology**	**30**
7.1	Project Traffic Generation	30
7.2	Project Traffic Distribution and Assignment	32
8.0	**Traffic Impact Analysis Methodology**	**36**
8.1	Impact Criteria and Thresholds	36
8.2	Traffic Impact Analysis Scenarios	37

TABLE OF CONTENTS *(continued)*

SECTION PAGE

9.0 Traffic Analysis 38
9.1 Existing Conditions 38
9.1.1 Existing Conditions 38
9.1.2 Existing With Project Conditions 38
9.2 Future (Opening Year) Conditions 38
9.2.1 Future (Opening Year) Without Project Conditions 38
9.2.2 Future (Opening Year)With Project Conditions 42

10.0 Transportation Improvement Measures 47

11.0 California Department of Transportation Freeway Analysis 49
11.1 Freeway Analysis 49
11.1.1 Existing and Existing With Project Conditions 50
11.1.2 Future (Opening Year) Without and Future With Project Conditions 50
11.2 Intersection Analysis 50
11.3 Ramp Vehicle Queuing Analysis 52

12.0 Supplemental Review of Escondido Avenue at Ultimate Configuration 55

13.0 Conclusions 57

TABLE OF CONTENTS *(continued)*

LIST OF TABLES

SECTION—TABLE #		PAGE
4-1	List of Study Intersections	12
4-2	Existing Roadway Descriptions	15
4-3	Existing Transit Routes	16
5-1	Existing Traffic Volumes	19
6-1	Related Projects List and Trip Generation	23
7-1	Project Trip Generation	31
9-1	Summary of Delays and Levels of Service	39
11-1	Caltrans Freeway Impact Analysis	51
11–2	Caltrans Intersection Impact Analysis	53
11–3	Summary of Potential Freeway Off-Ramp Vehicle Queuing Analysis	54

APPENDICES

APPENDIX	
A.	Manual Traffic Count Data
B.	HCM Levels of Service Explanation
	HCM Data Worksheets – Weekday AM and PM Peak Hours
C.	Caltrans Analysis: HCM and Levels of Service Explanation
	Freeway Segment Analysis Worksheets - Weekday AM and PM Peak Hours
	HCM and Ramp Queuing Data Worksheets – Weekday AM and PM Peak Hours
D.	Supplemental Review of Escondido Avenue at Ultimate Configuration

TABLE OF CONTENTS *(continued)*
LIST OF FIGURES

SECTION—FIGURE #		PAGE
1-1	Vicinity Map	2
2–1	Hesperia Main Street and Freeway Corridor Specific Plan Area	6
2-2	Aerial Photograph of Existing Project Site	7
2-3	Site Plan	8
4-1	Existing Lane Configurations	13
4-2	Existing Public Transit Routes	17
5-1	Existing Traffic Volumes – Weekday AM Peak Hour	20
5-2	Existing Traffic Volumes – Weekday PM Peak Hour	21
6-1	Location of Related Projects	26
6-2	Related Projects Traffic Volumes – Weekday AM Peak Hour	27
6-3	Related Projects Traffic Volumes – Weekday PM Peak Hour	28
7-1	Project Trip Distribution	33
7-2	Project Traffic Volumes – Weekday AM Peak Hour	34
7-3	Project Traffic Volumes – Weekday PM Peak Hour	35
9–1	Existing With Project Traffic Volumes – Weekday AM Peak Hour	40
9–2	Existing With Project Traffic Volumes – Weekday PM Peak Hour	41
9–3	Future (Opening Year) Without Project Traffic Volumes – Weekday AM Peak Hour	43
9–4	Future (Opening Year) Without Project Traffic Volumes – Weekday PM Peak Hour	44
9–5	Future (Opening Year) With Project Traffic Volumes – Weekday AM Peak Hour	45
9–6	Future (Opening Year) With Project Traffic Volumes – Weekday PM Peak Hour	46
12-1	Project Trip Distribution – Escondido Avenue at Ultimate Configuration	56

TRAFFIC IMPACT STUDY

KAISER PERMANENTE HESPERIA MEDICAL OFFICE BUILDING PROJECT

City of Hesperia, California
October 23, 2018

1.0 INTRODUCTION

This traffic analysis has been conducted to identify and evaluate the potential traffic impacts of the proposed Kaiser Permanente Medical Office Building (MOB) project ("proposed project" herein) on the surrounding street system. The project site is located at the southwest corner of the Escondido Avenue/The Marketplace intersection in the City of Hesperia. The project site is generally bounded by vacant properties to the north, south and west and Escondido Avenue to the east. The proposed Kaiser Permanente Hesperia MOB project and general vicinity are shown in ***Figure 1-1***.

1.1 Traffic Study Overview

The traffic analysis follows City of Hesperia traffic impact study requirements and is consistent with the traffic impact assessment guidelines set forth in the San Bernardino County Congestion Management Program. This traffic analysis evaluates potential project-related impacts at eight key intersections in the vicinity of the project site, including the proposed signalized project driveway on Escondido Avenue. The study intersections were determined in consultation with City of Hesperia Public Works Department staff. The *Highway Capacity Manual* (HCM) was utilized to determine intersection delay values and corresponding Levels of Service for the study intersections. In addition, potential traffic effects to the Caltrans highway system have been reviewed as part of this traffic study according to Caltrans analysis methodologies.

This study (i) presents existing traffic volumes, (ii) includes existing traffic volumes with the forecast traffic volumes from the proposed project, (iii) recommends mitigation measures, where necessary, (iv) forecasts future cumulative baseline traffic volumes, (v) forecasts future traffic volumes with the proposed project, (vi) determines future forecast with project-related impacts, and (vii) recommends mitigation measures, where necessary.

1.2 Study Area

Upon coordination with City staff, eight study intersections have been identified for evaluation during the weekday morning and afternoon peak hours. The study intersections provide local access to the study area and define the extent of the boundaries for this traffic impact analysis. Further discussion of the existing street system and study area is provided in Section 4.0.

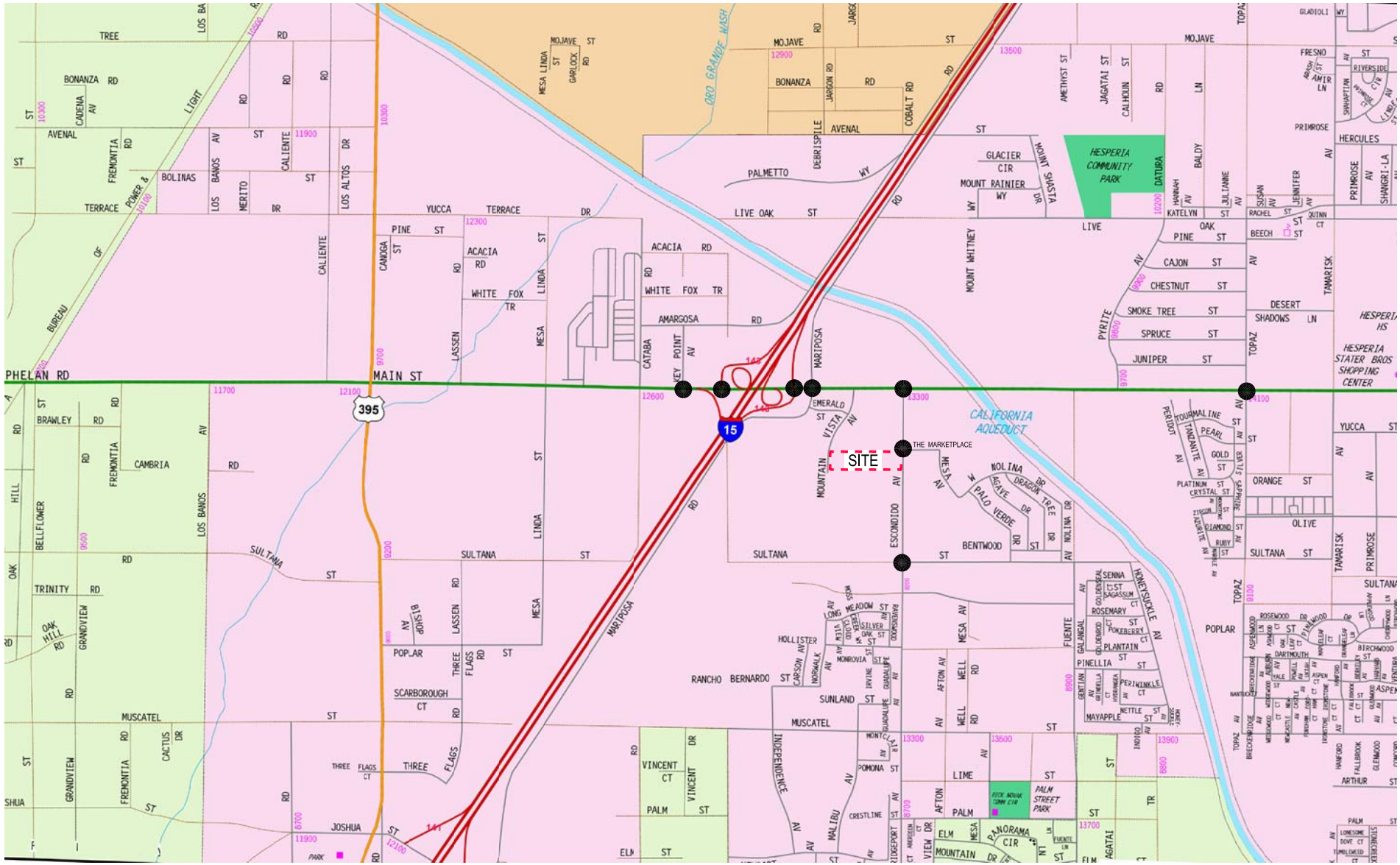

N

NOT TO SCALE

MAP SOURCE: RAND MCNALLY & COMPANY

FIGURE 1-1
VICINITY MAP

LINSCOTT, LAW & GREENSPAN, engineers

KAISER PERMANENTE HESPERIA MOB PROJECT

o:\job_file\4246\dwg\f1-1.dwg LDP 08:37:47 10/23/2018 rodriquez

The general location of the project in relation to the study locations and surrounding street system is presented in *Figure 1–1*. The traffic analysis study area is generally comprised of those locations which have the greatest potential to experience significant traffic impacts due to the proposed project as defined by the Lead Agency. In the traffic engineering practice, the study area generally includes those intersections that are:

a. Immediately adjacent or in close proximity to the project site;

b. In the vicinity of the project site that are documented to have current or projected future adverse operational issues; and

c. In the vicinity of the project site that are forecast to experience a relatively greater percentage of project-related vehicular turning movements (e.g., at freeway ramp intersections).

The locations selected for analysis were based on the above criteria, proposed project peak hour vehicle trip generation, the anticipated distribution of project vehicular trips and existing intersection/corridor operations.

1.3 Overview of Senate Bill 743[1]

On September 27, 2013, Governor Brown signed Senate Bill (SB) 743 (Steinberg, 2013). Among other things, SB 743 creates a process to change analysis of transportation impacts under the California Environmental Quality Act (Public Resources Code Section 21000 and following) (CEQA). On December 30, 2013, the State of California Governor's Office of Planning and Research (OPR) released a preliminary evaluation of alternative methods of transportation analysis. The intent of the original guidance documentation was geared towards projects within areas that are designated as transit priority areas first, to be followed by other areas of the State. OPR issued another draft discussion document in April 2018, suggesting some new revisions to the formal CEQA guidelines. One of the possible new metrics includes the determination of vehicle miles traveled (VMT) for projects. Previously it was thought that any corresponding revisions resulting from SB 743 as it pertains to the formal CEQA guidelines would at the earliest occur early in year 2016.

Fairly significant delays have occurred in the adoption of any new CEQA guidelines due to several issues, including Assembly Bill (AB) 779. Before this bill, OPR was contemplating the changes associated with the new metrics. Rather than implementing in transit priority areas first and then the rest of the State, OPR was leaning toward allowing agencies to opt voluntarily into SB 743 immediately or wait until after a phase-in period that could last for a year or two. OPR also is now giving consideration to exempting freight movement from the requirements of SB 743. To the best of our knowledge, year 2020 (at the earliest) would be the timeframe for formal adoption of any changes to the CEQA guidelines. However, it is noted that any jurisdiction in the meantime can

[1]*An act to amend Sections 21181, 21186, 21187, 21189.1, and 21189.3 of, to repeal and add Section 21185 of, and to add and repeal Section 21186.6.6 of, the Public Resources Code, relating to environmental quality.*

adopt new significance thresholds prior to the adoption of any formal revisions to the CEQA guidelines. As of the writing of this report, the City of Pasadena, the City of Oakland, City of San Jose and the City of San Francisco are the only cities in the State of California to have done so.

2.0 PROJECT DESCRIPTION

2.1 Existing Project Site

The project site is located at the southwest corner of the Escondido Avenue/The Marketplace intersection in the City of Hesperia. The proposed project site is located within the Hesperia Main Street and Freeway Corridor Specific Plan area. The Hesperia Main Street and Freeway Corridor Specific Plan[2] area encompasses both major regional access to the City of Hesperia, Interstate 15, as well as the major arterial, Main Street, supporting local circulation that provides access to commercial centers within the City. Refer to ***Figure 2-1*** which shows the Hesperia Main Street and Freeway Corridor Specific Plan area.

The project site is generally bounded by vacant properties to the north, south and west and Escondido Avenue to the east. It is important to note that the west side of the existing project site will be bordered in the future by the southerly extension of Mountain Vista Avenue. The 5-acre project site is currently vacant. The proposed project site and general vicinity are shown in *Figure 1-1*. An aerial photograph of the existing project site is contained in ***Figure 2-2***.

2.2 Proposed Project Description

Kaiser Permanente Health Plan seeks to obtain entitlements to construct a medical office building within the City of Hesperia. The proposed project consists of the development of a medical office building with a total of approximately 55,000 square feet of floor area. A drop-off/pick up zone will be provided along the eastern portion the medical office building. A total of 275 parking spaces is planned to be provided on-site. Construction of the proposed project is expected to commence in year 2018 with occupancy by year 2020. The site plan for the proposed project is illustrated in ***Figure 2-3***.

Vehicular access to the proposed project site will be provided via two driveways on Escondido Avenue. Further discussion of the project's site access and circulation scheme is provided in Section 3.0 herein.

[2] Source: *Hesperia Main Street and Freeway Corridor Specific Plan*, Effective October 16, 2008, Amended April 17, 2014.

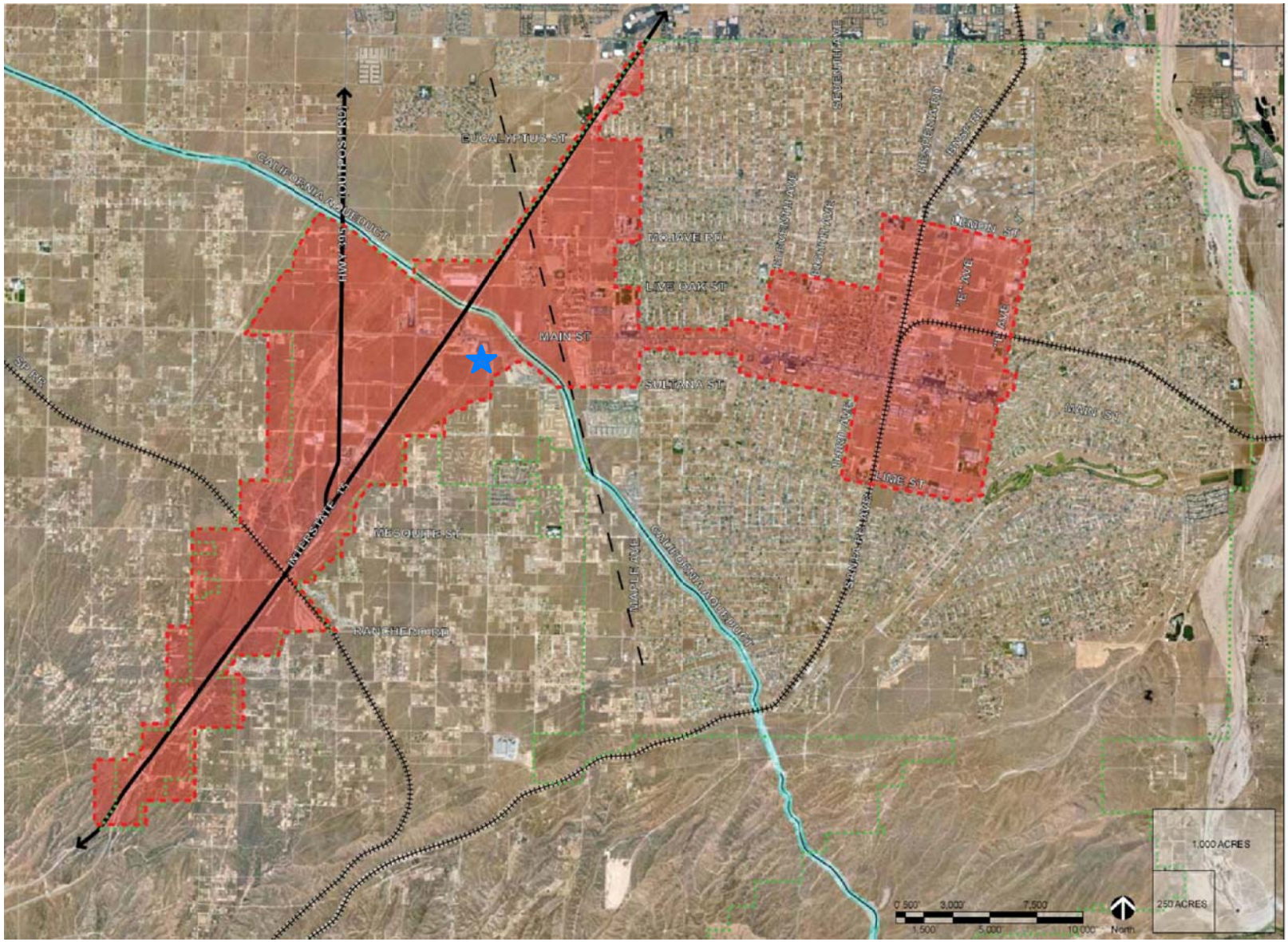

N

NOT TO SCALE

MAP SOURCE: CITY OF HESPERIA

PROJECT SITE

FIGURE 2-1
HESPERIA MAIN STREET AND FREEWAY CORRIDOR SPECIFIC PLAN AREA

KAISER PERMANENTE HESPERIA MOB PROJECT

LINSCOTT, LAW & GREENSPAN, engineers

o:\job_file\4246\dwg\f2-1.dwg LDP 16:15:07 10/19/2017 rodriquez

N

NOT TO SCALE

MAP SOURCE: GOOGLE EARTH

SITE

FIGURE 2-2
AERIAL PHOTOGRAPH OF EXISTING PROJECT SITE

LINSCOTT, LAW & GREENSPAN, engineers

KAISER PERMANENTE HESPERIA MOB PROJECT

o:\job_file\4246\dwg\f2-2.dwg LDP 08:40:06 10/23/2018 rodriquez

N

NOT TO SCALE

SOURCE: HMC ARCHITECTS

FIGURE 2-3
SITE PLAN

LINSCOTT, LAW & GREENSPAN, engineers

KAISER PERMANENTE HESPERIA MOB PROJECT

o:\job_file\4246\dwg\f2-3.dwg LDP 08:47:31 10/23/2018 rodriquez

3.0 SITE ACCESS AND CIRCULATION

Descriptions of the existing site and proposed project site access and circulation schemes are provided in the following subsections.

3.1 Existing Site Access

Vehicular access to the project site is currently provided via one driveway on Escondido Avenue. The site driveway is located on the west side of Escondido Avenue and the site is currently undeveloped. Full access (i.e., right-turn and left-turn ingress and egress movements) is allowed at the existing driveway. However, the existing driveway has been barricaded to discourage cut-through traffic and is currently not accessible.

3.2 Proposed Project Site Access

Vehicular access to the proposed project site is planned to be provided via two driveways on Escondido Avenue. The proposed vehicular site access scheme for the Kaiser Permanente Hesperia MOB project is displayed in *Figure 2-3*. Descriptions of the planned project site access points are provided in the following paragraphs.

- *Escondido Avenue Northerly Project Driveway:*

  This project driveway will be located on the west side of Escondido Avenue, across The Marketplace driveway. This driveway will be made possible through a shared use agreement with the adjacent parcel to the north. The Escondido Avenue northerly driveway will be a primary access point and is planned to accommodate access both for the proposed project and the adjacent parcel/s. The project site driveway will provide a direct connection to the internal drive aisles surrounding the medical office building, the planned drop-off and pick-up area located east of the building, and the proposed service/loading dock located at the northern portion of the site. As part of the proposed project, this driveway will create the west leg of the Escondido Avenue/The Marketplace intersection and full access (i.e., left-turn and right-turn ingress and egress turning movements) will be accommodated at this driveway. Traffic signal modifications will also be required at this intersection as part of the proposed project. The proposed improvements at the Escondido Avenue/The Marketplace intersection would be constructed by the project Applicant per City of Hesperia design standards.

- *Escondido Avenue Southerly Project Driveway*

  This project driveway is planned to be located on the west side of Escondido Avenue, at the southeast corner of the project site. The Escondido Avenue southerly driveway is planned to provide access to the medical office building and associated parking areas. Full access is planned to be provided (i.e., right-turn and left-turn ingress and egress turning movements) at this project driveway via the existing two-way left turn lane provided on Escondido Avenue.

The Escondido Avenue southerly driveway would be constructed to City of Hesperia design standards.

It should be noted that based on information provided by City of Hesperia staff, a future raised median island is planned for Escondido Avenue as part of the ultimate cross section configuration. Therefore, when the raised median is constructed along Escondido Avenue, the southerly project driveway would be limited to right-turn ingress and egress movements only.

3.3 Pedestrian Access

The project should be designed to encourage pedestrian activity and walking as a transportation mode.[3] Walkability is a term for the extent to which walking is readily available as a safe, connected, accessible and pleasant mode of transport. There are several criteria that are widely accepted as key aspects of the walkability of urban areas that should be satisfied. The underlying principle is that pedestrians should not be delayed, diverted, or placed in danger. The widely accepted characteristics of walkability are as follows:

- Connectivity: People can walk from one place to another without encountering major obstacles, obstructions, or loss of connectivity.
- Convivial: Pedestrian routes are friendly and attractive, and are perceived as such by pedestrians.
- Conspicuous: Suitable levels of lighting, visibility and surveillance over its entire length, with high quality delineation and signage.
- Comfortable: High quality and well-maintained footpaths of suitable widths, attractive landscaping and architecture, shelter and rest spaces, and a suitable allocation of roadspace to pedestrians.
- Convenient: Walking is a realistic travel choice, partly because of the impact of the other criteria set forth above, but also because walking routes are of a suitable length as a result of land use planning with minimal delays.

The project site is accessible from nearby public bus stops as well as other amenities along nearby major corridors. The majority of pedestrian access to the project site is envisioned to occur via the existing public sidewalks provided along streets in the study area as well as a new sidewalk which will be constructed along Escondido Avenue project frontage.

[3] For example, refer to http://www.walkscore.com/, which generates a walkability score of approximately 35 (Car Dependent) out of 100 for the project site. Walk Score calculates the walkability of an address by locating nearby stores, restaurants, schools, parks, etc. Walk Score measures how easy it is to live a car-lite lifestyle—not how pretty the area is for walking.

4.0 EXISTING STREET SYSTEM

4.1 Regional Highway System

Regional vehicular access to the project site is provided by the I-15 (Barstow) Freeway. A brief description of the I-15 Freeway is provided in the following paragraph.

I-15 (Barstow) Freeway is a major north-south oriented freeway that begins near the Mexico–US border in San Diego County and stretches north to Alberta, Canada, passing through the states of California, Nevada, Arizona, Utah, Idaho, and Montana. Three mainline travel lanes are provided in the northbound and southbound directions on the I-15 Freeway in the project vicinity. I-15 Freeway northbound and southbound on- and off-ramps are provided at Main Street.

4.2 Local Street System

Immediate access to the proposed project site is provided via Escondido Avenue, via Main Street and the I-15 Freeway. The list of eight study intersections selected in consultation with City of Hesperia staff for analysis of potential impacts related to the proposed project is presented in ***Table 4-1***. It should be noted that while not specifically required by City staff, the Escondido Avenue/The Marketplace intersection (i.e., the proposed project driveway) has been included in the analysis. Seven of the eight study intersections selected for analysis are presently controlled by traffic signals, with the remaining study intersection currently stop sign controlled. The existing lane configurations at the study intersections are displayed in ***Figure 4-1***.

4.3 Roadway Classifications

The City of Hesperia utilizes the roadway categories recognized by regional, state and federal transportation agencies. There are four categories in the roadway hierarchy, ranging from freeways with the highest capacity to two-lane undivided roadways with the lowest capacity. The roadway categories are summarized as follows:

- *Freeways* are limited-access and high speed travel ways included in the state and federal highway systems. Their purpose is to carry regional through-traffic. Access is provided by interchanges with typical spacing of one mile or greater. No local access is provided to adjacent land uses.

- *Arterial* roadways are major streets that primarily serve through-traffic and provide access to abutting properties as a secondary function. Arterials are generally designed with two to six travel lanes and their major intersections are signalized. This roadway type is divided into two categories: principal and minor arterials. Principal arterials are typically four-or-more lane roadways and serve both local and regional through-traffic. Minor arterials are typically two-to-four lane streets that service local and commute traffic.

Table 4-1
LIST OF STUDY INTERSECTIONS

NO.	INTERSECTION	TRAFFIC CONTROL	JURISDICTION(S)
1	Key Point Avenue/Main Street	Signalized	City of Hesperia
2	I-15 Freeway SB Off-Ramp/Main Street	Signalized	City of Hesperia
3	I-15 Freeway NB On/Off-Ramps/Main Street	Signalized	City of Hesperia
4	Mariposa Road/Main Street	Signalized	City of Hesperia
5	Escondido Avenue/Main Street	Signalized	City of Hesperia
6	Escondido Avenue/Sultana Street	Unsignalized	City of Hesperia
7	Topaz Avenue/Main Street	Signalized	City of Hesperia
8	Escondido Avenue/The Marketplace	Signalized	City of Hesperia

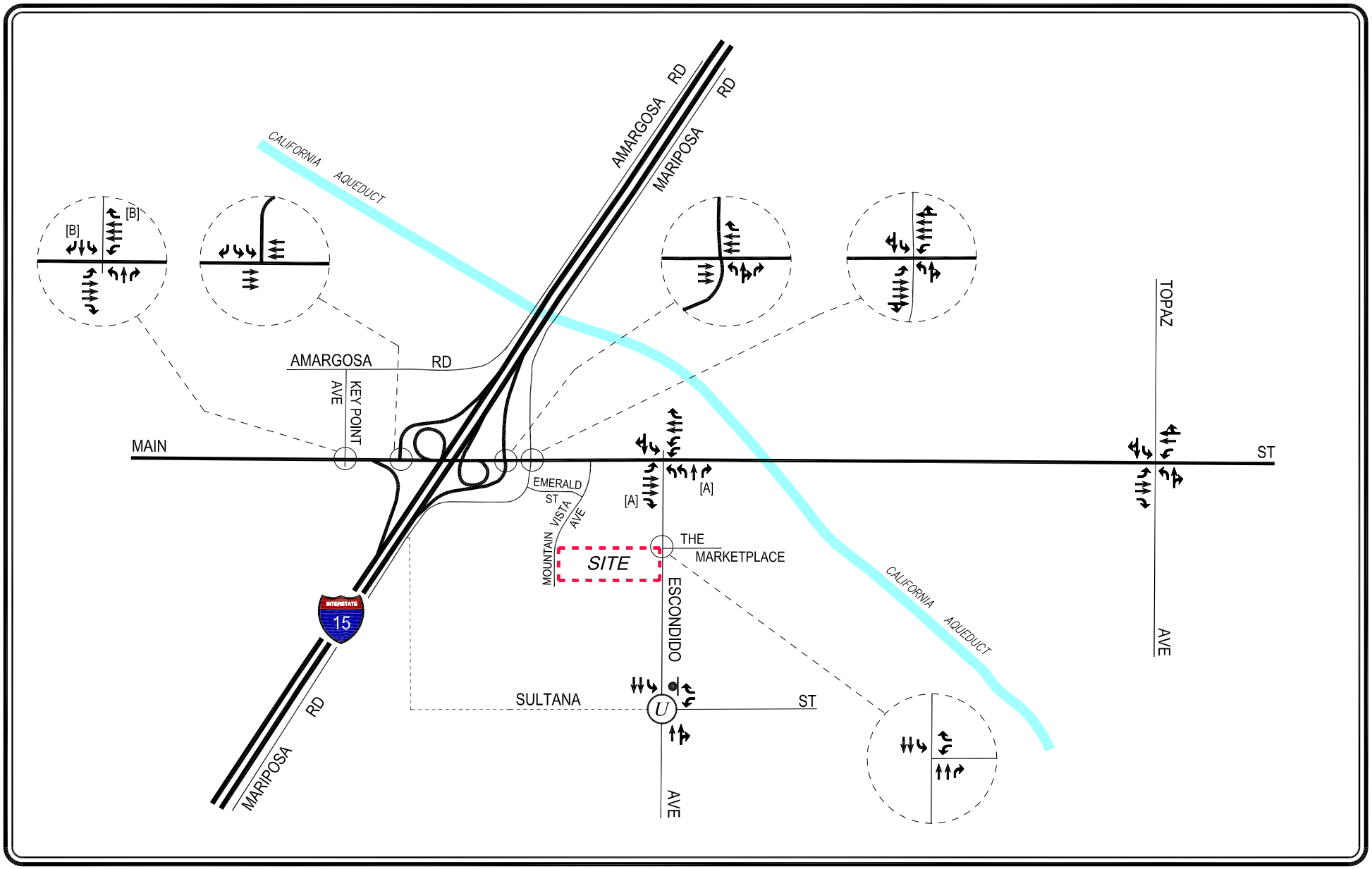

N

NOT TO SCALE

NOTES:
- U — UNSIGNALIZED INTERSECTION
- STOP SIGN
- [A] OVERLAP PHASE
- [B] FUNCTIONAL RIGHT-TURN ONLY LANE

FIGURE 4-1
EXISTING LANE CONFIGURATIONS

LINSCOTT, LAW & GREENSPAN, engineers

KAISER PERMANENTE HESPERIA MOB PROJECT

o:\job_file\4246\dwg\f4-1.dwg LDP 08:49:41 10/23/2018 rodriquez

- *Collector* roadways are streets that provide access and traffic circulation within residential and non-residential (e.g., commercial and industrial) areas. Collector roadways connect local streets to arterials and are typically designed with two through travel lanes (i.e., one through travel lane in each direction) that may accommodate on-street parking. They may also provide access to abutting properties.

- *Local* roadways distribute traffic within a neighborhood, or similar adjacent neighborhoods, and are not intended for use as a through-street or a link between higher capacity facilities such as collector or arterial roadways. Local streets are fronted by residential uses and do not typically serve commercial uses.

4.4 Roadway Descriptions

A review of the important roadways in the project site vicinity and study area is summarized in ***Table 4-2***. As indicated in *Table 4-2*, the important roadways within the project study area were reviewed in terms of the number of lanes provided, parking restrictions, posted speed limits, etc. Additionally, the roadway classifications of key roads in the project study area also are presented in *Table 4-2*.

4.5 Transit Services

Public bus and rail transit service within the project study area is currently provided by the Victor Valley Transit Authority. A summary of the existing transit service, including the transit route, destinations and peak hour headways is presented in ***Table 4–3***. The existing public transit routes in the project site vicinity are illustrated in ***Figure 4–2***.

Table 4-2
EXISTING ROADWAY DESCRIPTIONS

Roadway	Classification [1]	Travel Lanes		Median Types [4]	Speed Limit (mph)
		Direction [2]	No. Lanes [3]		
Key Point Avenue (Amargosa Road to Main Street)	Secondary Arterial	N-S	4	N/A	N/A
Mariposa Road	Local Road	N-S	2	N/A	50
Escondido Avenue (Main Street to Holister Street)	Arterial	N-S	4	2WLT	N/A
Topaz Avenue	Local Street	N-S	2	2WLT/ N/A	N/A
Main Street (Mesa Linda Street to I-15 Freeway)	Major Arterial	E-W	4 to 6 [5]	RMI	55
Main Street (I-15 Freeway to I Avenue)	Special Street	E-W	7 to 4 [6]	RMI/2WLT	50
The Marketplace	Local Street	E-W	2	N/A	N/A
Sultana Street (Escondido Avenue to Honeysuckle Avenue)	Local Street	E-W	2	N/A	25

Notes:
[1] Roadway classifications obtained from the *City of Hesperia General Plan 2010, Traffic Circulation Plan, October 2010* .
[2] Direction of roadways in the project area: NB-SB - northbound and southbound; and EB-WB - eastbound and westbound.
[3] Number of lanes in both directions of the roadway.
[4] Median type of the road: RMI - Raised Median Island; 2WLT - 2-Way Left-Turn Lane; and N/A-Not Applicable.
[5] Class II Bike Lane
[6] Special Street classified as 120 ft (RoW)

Table 4-3
EXISTING TRANSIT ROUTES [1]

ROUTE	DESTINATIONS	ROADWAY(S) NEAR SITE	NO. OF BUSES DURING PEAK HOUR		
			DIR	AM	PM
Victor Valley 24	Oak Hills to Cedar Street via Escondido Avenue, Mariposa Road and Ranchero Road.	Escondido Avenue, Main Street	EB WB	0 1	0 1
Victor Valley 48	Super Target to Hesperia Post Office via San Jaoquin Valley College and Hesperia City Hall/Library	Topaz Avenue, Main Street, Escondido Avenue	EB WB	1 1	1 1
Victor Valley 68	Victor Valley Mall to Hesperia Post Office via Super Target and Hesperia Library & Civic Center	Key Point Avenue, Main Street	EB WB	1 1	1 1
			Total	**5**	**5**

[1] Source: Victor Valley Transit Authority website, 2017.

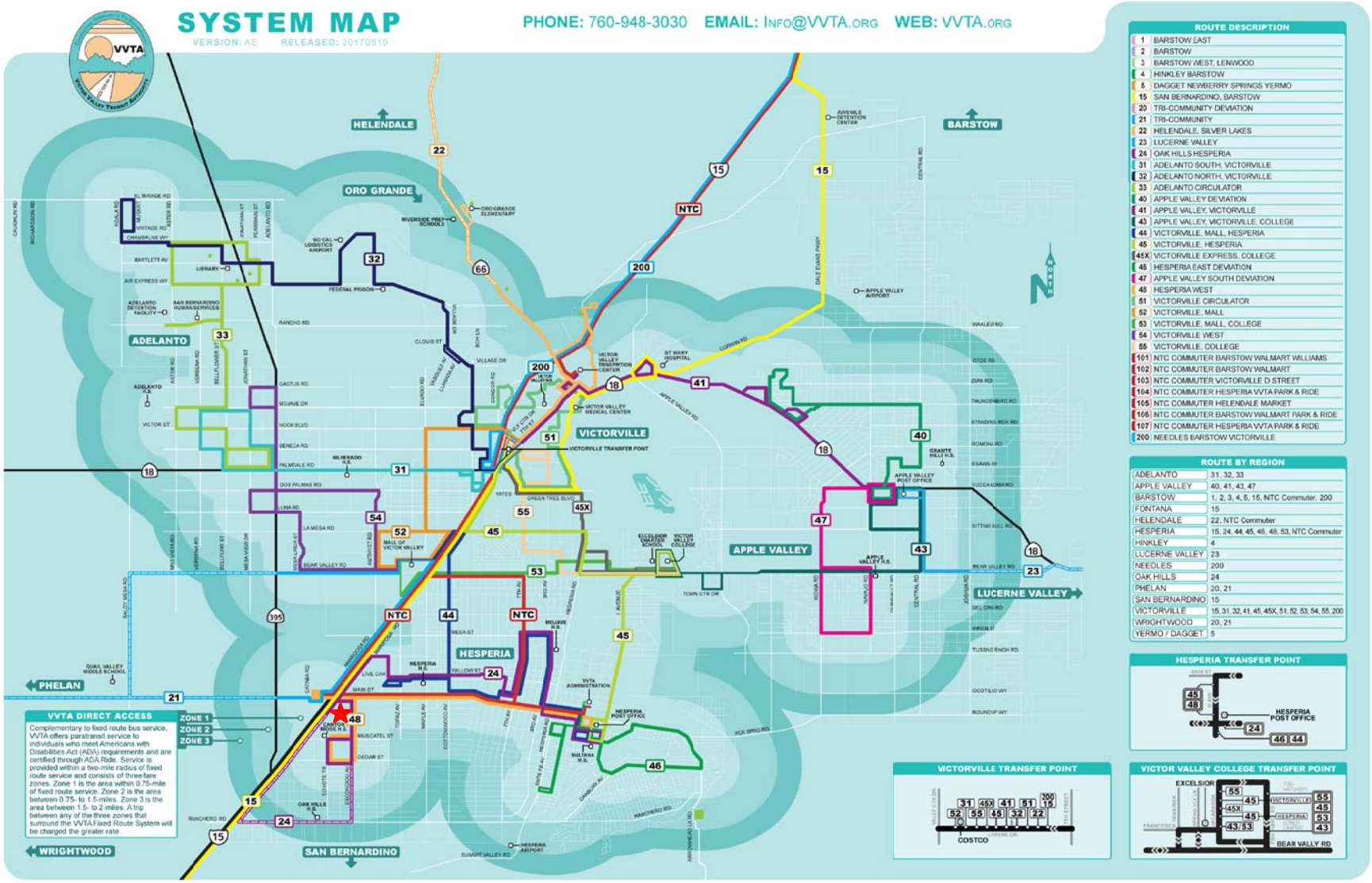

N

NOT TO SCALE

MAP SOURCE: VICTOR VALLEY TRANSIT AUTHORITY (VVT) WEBSITE 2017

★ PROJECT SITE

FIGURE 4-2
EXISTING PUBLIC TRANSIT ROUTES

LINSCOTT, LAW & GREENSPAN, engineers

KAISER PERMANENTE HESPERIA MOB PROJECT

o:\job_file\4246\dwg\f4-2.dwg LDP 16:19:37 10/19/2017 rodriquez

5.0 TRAFFIC COUNTS

Manual counts of vehicular turning movements were conducted at each of the eight study intersections during the weekday morning (AM) and afternoon (PM) commuter periods to determine the peak hour traffic volumes. The manual counts were conducted in August 2017 by independent traffic count subconsultants (The Traffic Solution and Counts Unlimited) at the eight study intersections from 7:00 to 9:00 AM to determine the AM peak commuter hour, and from 4:00 to 6:00 PM to determine the PM peak commuter hour. It is noted that all of the traffic counts were conducted when local schools were in session. The manual traffic count data were adjusted by two percent (2.0%) per year to reflect Year 2018 existing conditions. Traffic volumes at the study intersections show the typical peak periods between 7:00 to 9:00 AM and 4:00 to 6:00 PM generally associated with peak commuter hours.

The weekday AM and PM peak hour manual counts of vehicle movements at the eight study intersections are summarized in ***Table 5-1***. The existing traffic volumes at the study intersections during the weekday AM and PM peak hours are shown in ***Figures 5-1*** and ***5-2***, respectively. Summary data worksheets of the manual traffic counts at the study intersections are contained in ***Appendix A***.

Table 5-1
EXISTING TRAFFIC VOLUMES [1]
WEEKDAY AM AND PM PEAK HOURS

NO.	INTERSECTION	DATE	DIR	AM PEAK HOUR		PM PEAK HOUR	
				BEGAN	VOLUME	BEGAN	VOLUME
1	Key Point Avenue/ Main Street	08/24/2017	NB	8:00	108	4:45	356
			SB		171		343
			EB		823		870
			WB		895		1,454
2	I-15 Freeway SB Off-Ramp/ Main Street	08/24/2017	NB	7:00	0	4:45	0
			SB		467		844
			EB		892		1,305
			WB		1,361		1,516
3	I-15 Freeway NB Ramps/ Main Street	08/24/2017	NB	7:00	392	4:45	1,195
			SB		0		0
			EB		1,114		1,631
			WB		1,789		1,676
4	Mariposa Avenue/ Main Street	08/24/2017	NB	7:00	192	5:00	188
			SB		209		321
			EB		1,137		2,314
			WB		1,630		1,531
5	Escondido Avenue/ Main Street	05/10/2018	NB	7:00	1,003	5:00	831
			SB		13		138
			EB		1,216		2,046
			WB		1,084		1,315
6	Escondido Avenue/ Sultana Street	08/24/2017	NB	7:00	944	5:00	615
			SB		648		953
			EB		0		0
			WB		216		163
7	Topaz Avenue/ Main Street	08/24/2017	NB	7:00	326	5:00	274
			SB		245		154
			EB		1,119		1,729
			WB		1,099		1,271
8	Escondido Avenue/ The Marketplace	08/24/2017	NB	7:00	1,083	5:00	745
			SB		728		1,061
			EB		0		0
			WB		91		272

[1] Counts conducted by City Traffic Counters and Counts Unlimited

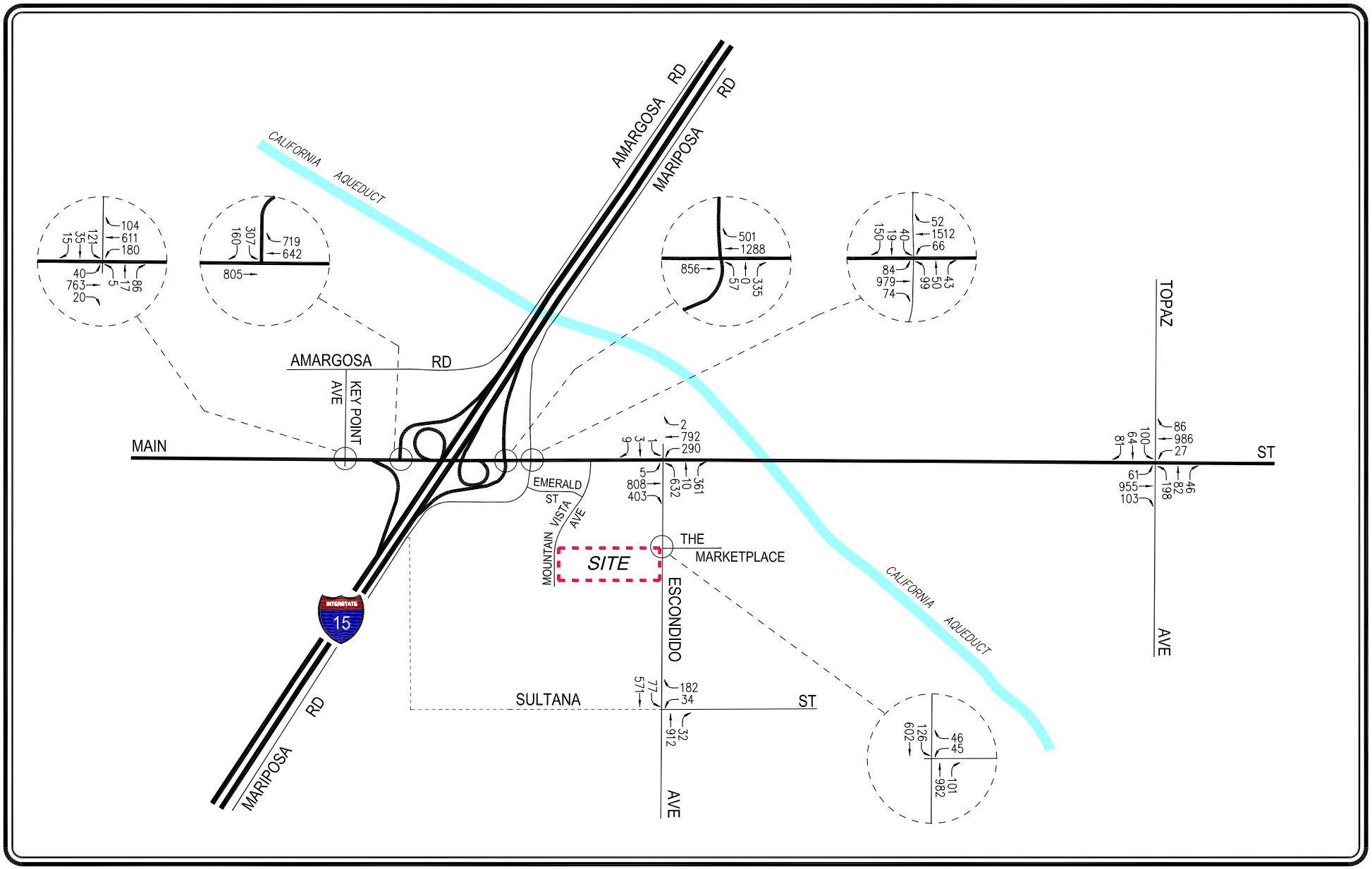

NOT TO SCALE

LINSCOTT, LAW & GREENSPAN, engineers

FIGURE 5-1
EXISTING TRAFFIC VOLUMES

WEEKDAY AM PEAK HOUR

KAISER PERMANENTE HESPERIA MOB PROJECT

o:\job_file\4246\dwg\f5-1.dwg LDP 08:50:32 10/23/2018 rodriquez

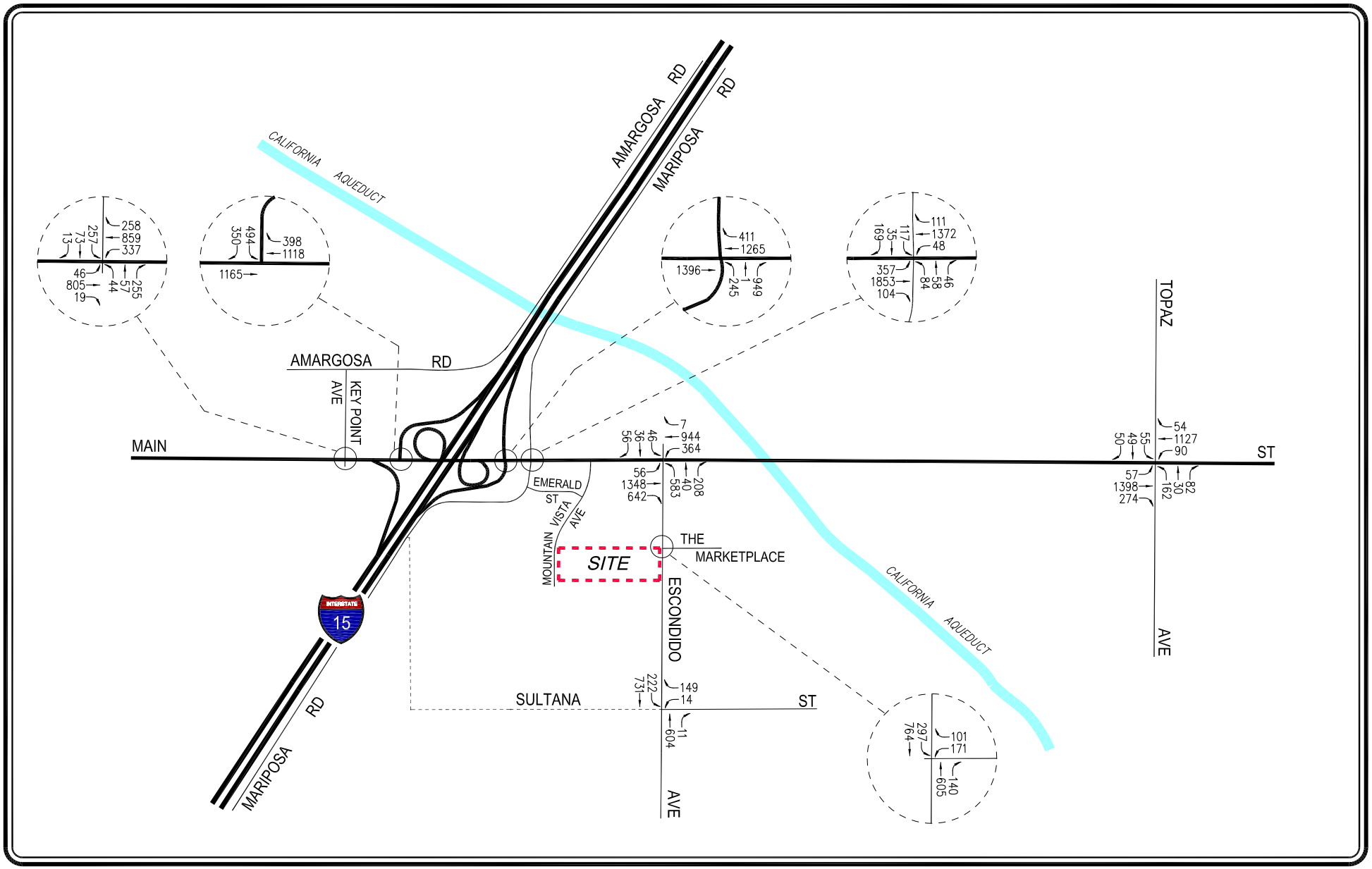

NOT TO SCALE

FIGURE 5-2
EXISTING TRAFFIC VOLUMES

WEEKDAY PM PEAK HOUR

KAISER PERMANENTE HESPERIA MOB PROJECT

LINSCOTT, LAW & GREENSPAN, engineers

o:\job_file\4246\dwg\f5-2.dwg LDP 09:02:54 10/23/2018 rodriquez

6.0 CUMULATIVE DEVELOPMENT PROJECTS

The forecast of future pre-project conditions was prepared in accordance with procedures outlined in Section 15130 of the CEQA Guidelines. Specifically, the CEQA Guidelines provide two options for developing the future traffic volume forecast:

> "(A) A list of past, present, and probable future projects producing related or cumulative impacts, including, if necessary, those projects outside the control of the [lead] agency, or
>
> (B) A summary of projections contained in an adopted local, regional or statewide plan, or related planning document, that describes or evaluates conditions contributing to the cumulative effect. Such plans may include: a general plan, regional transportation plan, or plans for the reduction of greenhouse gas emissions. A summary of projections may also be contained in an adopted or certified prior environmental document for such a plan. Such projections may be supplemented with additional information such as a regional modeling program. Any such document shall be referenced and made available to the public at a location specified by the lead agency."

Accordingly, the traffic analysis provides a highly conservative estimate of future pre-project traffic volumes as it incorporates both the "A" and "B" options outlined in the CEQA Guidelines for purposes of developing the forecast.

6.1 Related Projects

A forecast of on-street traffic conditions prior to occupancy of the proposed project was prepared by incorporating the potential trips associated with other known development projects (related projects) in the area. With this information, the potential impact of the proposed project can be evaluated within the context of the cumulative impact of all ongoing development. The related projects research was based on information on file at the City of Hesperia Planning Department. The list of related projects in the project site area is presented in ***Table 6-1***. The location of the related projects is shown in ***Figure 6-1***.

Traffic volumes expected to be generated by the related projects were calculated using rates provided in the Institute of Transportation Engineers' (ITE) *Trip Generation Manual*[4]. The related projects' respective traffic generation for the weekday AM and PM peak hours, as well as on a daily basis for a typical weekday, is summarized in *Table 6-1*. All of the related projects included in *Table 6-1* are assumed to be built and occupied under the future (opening year) conditions. The distribution of the related projects traffic volumes to the study intersections during the weekday AM and PM peak hours are displayed in ***Figures 6-2*** and ***6-3***, respectively.

[4] Institute of Transportation Engineers *Trip Generation Manual*, 9th Edition, Washington, D.C., 2012.

Table 6-1
RELATED PROJECTS LIST AND TRIP GENERATION [1]

MAP NO.	PROJECT STATUS	PROJECT NAME/ ADDRESS/LOCATION	LAND USE DATA		PROJECT DATA SOURCE	DAILY TRIP ENDS [2] VOLUMES	AM PEAK HOUR VOLUMES [2]			PM PEAK HOUR VOLUMES [2]		
			LAND-USE	SIZE			IN	OUT	TOTAL	IN	OUT	TOTAL
1	Proposed	Americana-Hesperia Retirement Project North side of Main Street, 250 feet east of the California Aqueduct	Senior Housing Assisted Living Clubhouse/Community Center Supermarket Medical/Dental Office	160 DU 192 DU 3,621 GSF 18,600 GSF 14,662 GSF	Phase I Phase II [3]	670 1,757	23 70	19 44	42 114	26 42	29 69	55 111
2	Proposed	Northeast corner of Main Street and Escondido Avenue	Supermarket Tire Store Retail Fast-Food Restaurant with Drive-Through	18,600 GSF 11,700 GSF 17,000 GLSF 3,000 GSF	[4] [5] [6] [7]	1,902 291 726 1,488	39 21 10 69	24 13 6 67	63 34 16 136	90 21 30 51	86 28 33 47	176 49 63 98
3	Proposed	Southeast corner of Sultana Street and Lassen Road	High School	35,963 GSF	[8]	464	78	32	110	19	16	35
4	Proposed	Southwest corner of Main Street and Cataba Road	Gasoline Station with Convenience Market and Car Wash	8 VFP	[9]	1,223	48	47	95	57	54	111
5	Proposed	660 feet north of Main Street between Topaz and Tamarisk Avenues	Condominium	164 DU	[10]	953	12	60	72	57	28	85
6	Proposed	Southwest corner of Main Street and Cataba Road	Retail	19,548 GLSF	[6]	835	12	7	19	35	38	73
7	Proposed	430 feet west of Mesa Linda Avenue on the north side of Main Street	Single-Family Detached Housing	200 DU	[11]	1,904	38	112	150	126	74	200
8	Proposed	Southwest corner of Primrose Avenue and Yucca Street	Apartment	40 DU	[12]	266	4	16	20	16	9	25
9	Proposed	1,650 feet east of Mariposa Road on the north side of Live Oak Street	Apartment	160 DU	[12]	1,064	16	66	82	64	35	99
10	Proposed	850 feet south of Main Street on the east side of Escondido Avenue	Auto Parts Sales	7,237 GSF	[13]	448	8	8	16	21	22	43
11	Proposed	9630 Maple Street	Motel	26 Rooms	[14]	237	6	11	17	8	7	15
12	Proposed	10200 Amargosa Road	High-Cube Warehouse	128,000 GSF	[15]	215	10	4	14	5	10	15
13	Proposed	14466 Main Street	Retail	22,427 GLSF	[6]	958	14	8	22	40	43	83
14	Proposed	Southwest corner of Mojave Street and Topaz Avenue	Single-Family Detached Housing	177 DU	[11]	1,685	33	100	133	112	65	177
15	Proposed	Northwest corner of Palm Street and Fuente Avenue	Single-Family Detached Housing	36 DU	[11]	343	7	20	27	23	13	36

Table 6-1 (Continued)
RELATED PROJECTS LIST AND TRIP GENERATION [1]

MAP NO.	PROJECT STATUS	PROJECT NAME/ ADDRESS/LOCATION	LAND USE DATA		PROJECT DATA SOURCE	DAILY TRIP ENDS [2]	AM PEAK HOUR VOLUMES [2]			PM PEAK HOUR VOLUMES [2]		
			LAND-USE	SIZE		VOLUMES	IN	OUT	TOTAL	IN	OUT	TOTAL
16	Proposed	South side of Mojave Street between Topaz Avenue and Tamarisk Avenue	Single-Family Detached Housing	185 DU	[11]	1,761	35	104	139	117	68	185
17	Proposed	Southwest corner of Live Oak Street and Fuente Avenue	Single-Family Detached Housing	56 DU	[11]	533	11	31	42	35	21	56
18	Proposed	330 feet south of Live Oak Street, approximately 400 feet west of Mt. Shasta Drive	Single-Family Detached Housing	20 DU	[11]	190	4	11	15	13	7	20
19	Proposed	Southeast corner of Muscatel Street and Mesa Avenue	Single-Family Detached Housing	37 DU	[11]	352	7	21	28	23	14	37
20	Proposed	South side of Hollister Street, approximately 650 feet west of Fuente Avenue	Single-Family Detached Housing	52 DU	[11]	495	10	29	39	33	19	52
21	Proposed	Southwest corner of Muscatel Street and Fuente Avenue	Single-Family Detached Housing	36 DU	[11]	343	7	20	27	23	13	36
22	Proposed	North side of Hollister Street, between Joshua Tree Avenue and Knight Avenue	Single-Family Detached Housing	17 DU	[11]	162	3	10	13	11	6	17
23	Proposed	North side of Mojave Street and south side of Valencia Street, 335 feet west of Topaz Avenue	Single-Family Detached Housing	268 DU	[11]	2,551	50	151	201	169	99	268
24	Proposed	Approximately 300 feet north of Palm Road, on the west side of Afton Avenue	Single-Family Detached Housing	8 DU	[11]	76	2	4	6	5	3	8
25	Proposed	Approximately 300 feet south of Hollister Road, on the west side of Afton Avenue	Single-Family Detached Housing	12 DU	[11]	114	2	7	9	8	4	12
26	Proposed	North of Palm Street between Afton Avenue and Mesa Avenue	Single-Family Detached Housing	35 DU	[11]	333	7	19	26	22	13	35
27	Proposed	Southwest corner of Hollister Street and Afton Avenue	Single-Family Detached Housing	9 DU	[11]	86	2	5	7	6	3	9
28	Proposed	Northwest corner of Hollister Street and Afton Avenue	Single-Family Detached Housing	20 DU	[11]	190	4	11	15	13	7	20
29	Proposed	South side of Muscatel Street, approximately 1,400 feet west of Maple Avenue	Single-Family Detached Housing	172 DU	[11]	1,637	32	97	129	108	64	172
30	Proposed	Love's Travel Center	Truck Stop	7,237 GSF	[16]	3,383	107	93	200	145	136	281
TOTAL						**29,635**	**801**	**1,277**	**2,078**	**1,574**	**1,183**	**2,757**

Table 6-1 (Continued)
RELATED PROJECTS LIST AND TRIP GENERATION [1]

[1] Source: City of Hesperia Planning Department. Trip generation for the related projects are based on ITE "Trip Generation Manual", 9th Edition, 2012 (as referenced in the Project Data Source column).
[2] Trips are one-way traffic movements, entering or leaving.
[3] Source: Focused Site Assessment for the Proposed Americana-Hesperia Retirement Project, LLG Engineers, May 14, 2018. Project build-out is forecast by Year 2025, which is beyond the projected buildout year of the Kaiser Permanente Project. Phase 1 of the project is conservatively assumed to be completed by Year 2020.
[4] ITE Land Use Code 850 (Supermarket) trip generation average rates.
[5] ITE Land Use Code 848 (Tire Store) trip generation average rates.
[6] ITE Land Use Code 820 (Shopping Center) trip generation average rates.
[7] ITE Land Use Code 934 (Fast-Food Restaurant with Drive-Through Window) trip generation average rates.
[8] ITE Land Use Code 530 (High School) trip generation average rates.
[9] ITE Land Use Code 946 (Gasoline/Service Station with Convenience Market and Car Wash) trip generation average rates.
[10] ITE Land Use Code 230 (Residential Condominium/Townhouse) trip generation average rates.
[11] ITE Land Use Code 210 (Single Family Detached Housing) trip generation average rates.
[12] ITE Land Use Code 220 (Apartment) trip generation average rates.
[13] ITE Land Use Code 843 (Auto Parts Sales) trip generation average rates.
[14] ITE Land Use Code 320 (Motel) trip generation average rates.
[15] ITE Land Use Code 152 (High Cube Warehouse) trip generation average rates.
[16] Source: Traffic Impact Study, Love's Travel Center, LSA Associates, Inc., October 2014.

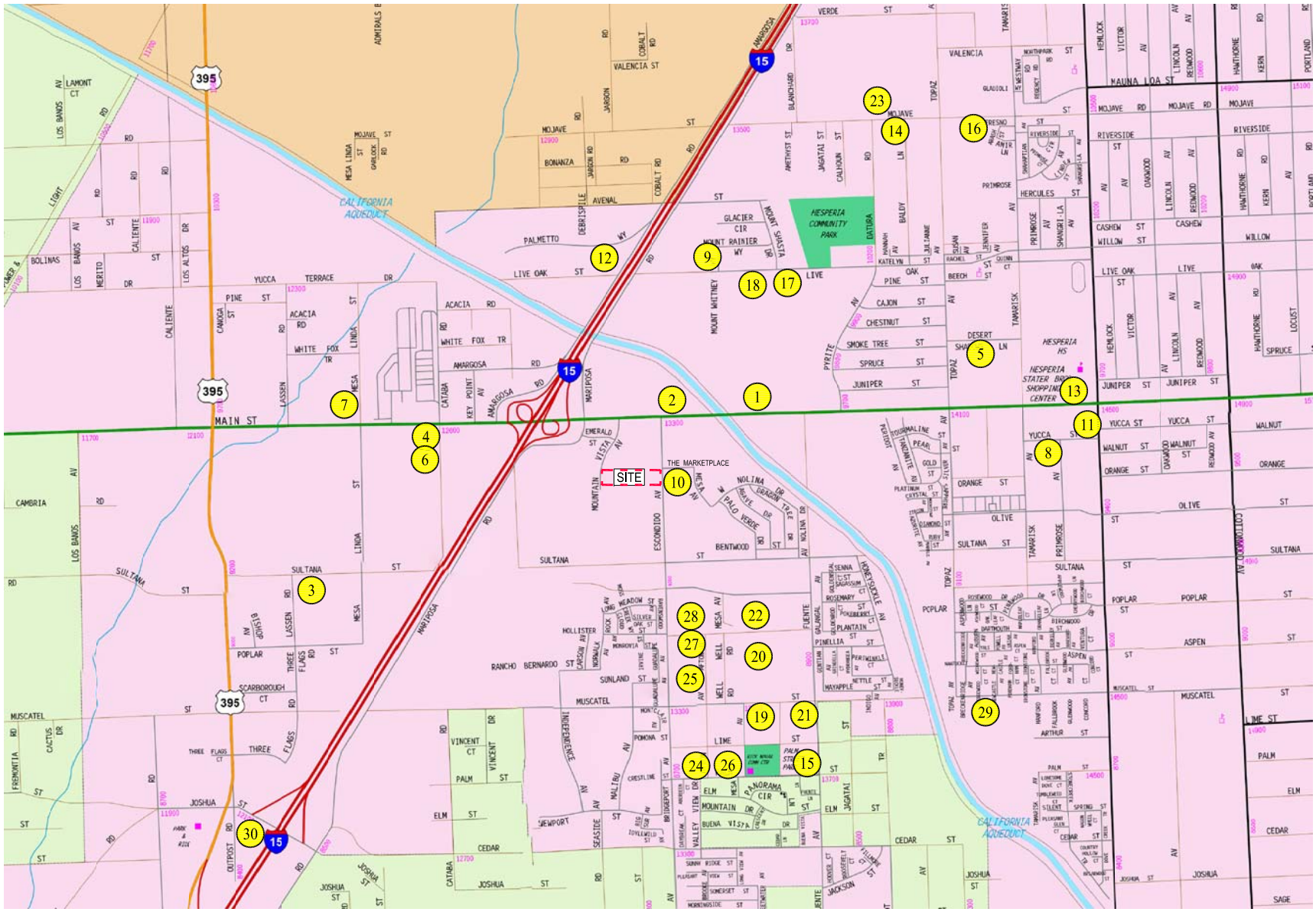

MAP SOURCE: RAND MCNALLY & COMPANY

N

NOT TO SCALE

FIGURE 6-1
LOCATION OF RELATED PROJECTS

LINSCOTT, LAW & GREENSPAN, engineers

KAISER PERMANENTE HESPERIA MOB PROJECT

o:\job_file\4246\dwg\f6-1.dwg LDP 09:06:15 10/23/2018 rodriquez

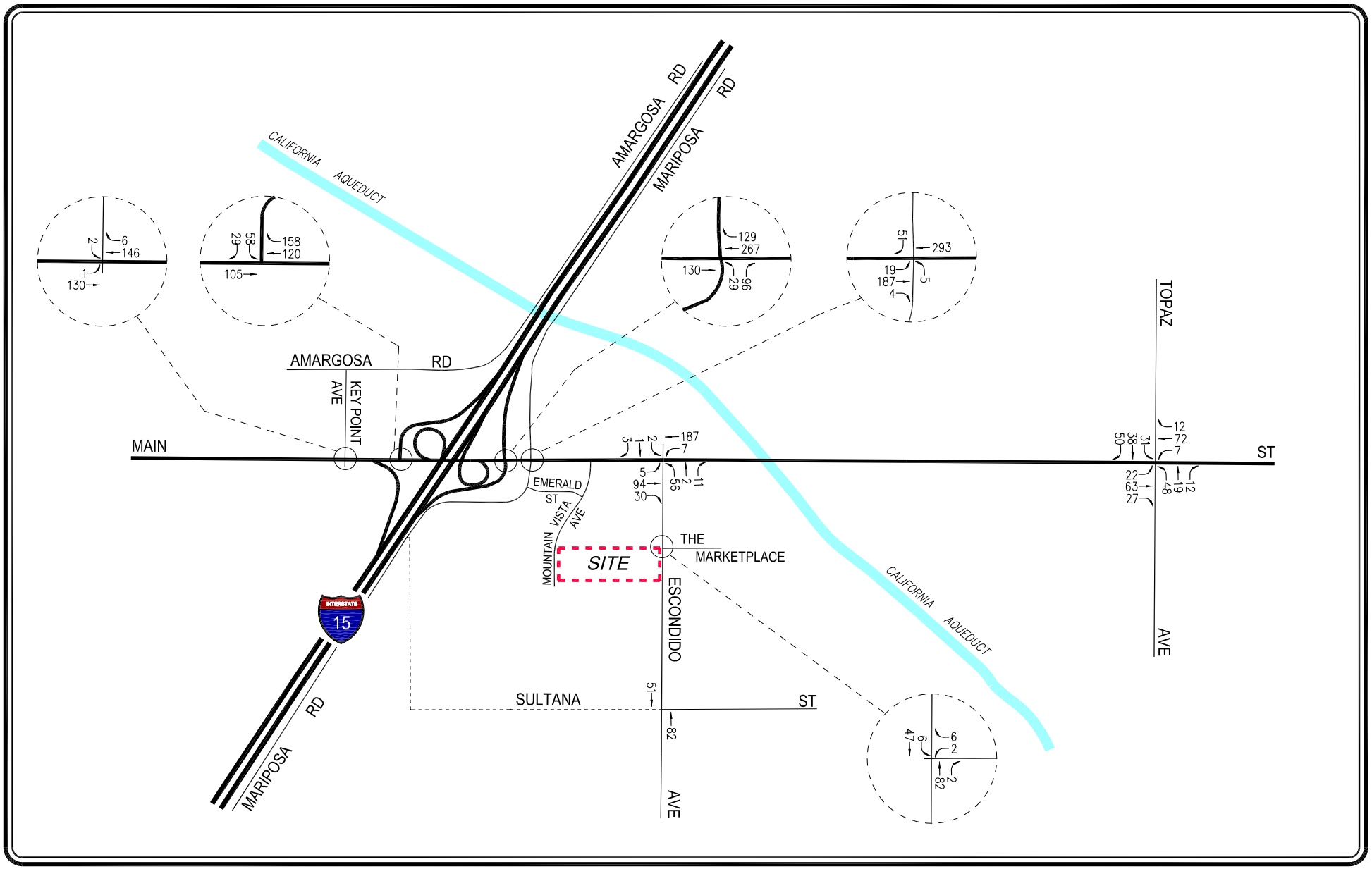

N

NOT TO SCALE

FIGURE 6-2
RELATED PROJECTS TRAFFIC VOLUMES

WEEKDAY AM PEAK HOUR

KAISER PERMANENTE HESPERIA MOB PROJECT

LINSCOTT, LAW & GREENSPAN, engineers

o:\job_file\4246\dwg\f6-2.dwg LDP 09:02:06 10/23/2018 rodriquez

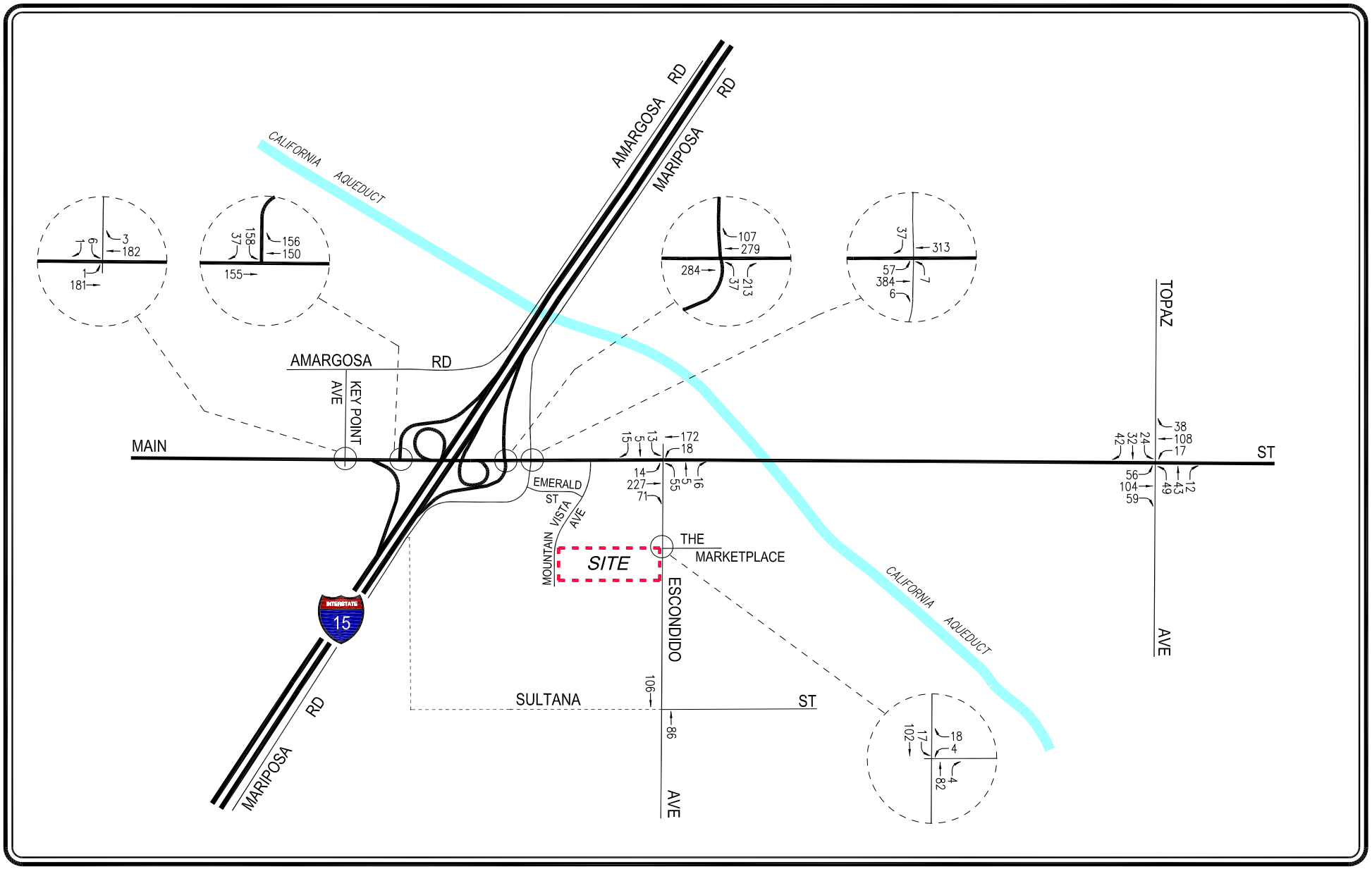

NOT TO SCALE

FIGURE 6-3
RELATED PROJECTS TRAFFIC VOLUMES

WEEKDAY PM PEAK HOUR

KAISER PERMANENTE HESPERIA MOB PROJECT

LINSCOTT, LAW & GREENSPAN, engineers

o:\job_file\4246\dwg\f6-3.dwg LDP 09:01:39 10/23/2018 rodriquez

6.2 Ambient Traffic Growth Factor

In order to account for area-wide regional growth not included in this analysis, the existing traffic volumes were increased at an annual rate of 2.0 percent (2.0%) to the year 2020 (i.e., the anticipated year of project build-out). The ambient growth factor was determined in consultation with City staff. It is noted that the traffic growth rate is intended to anticipate future traffic generated by development projects in the project vicinity. Thus, the inclusion in this traffic analysis of both a forecast of traffic generated by known related projects plus the use of an ambient growth traffic factor results in a conservative estimate of future traffic volumes at the study intersections.

7.0 TRAFFIC FORECASTING METHODOLOGY

In order to estimate the traffic impact characteristics of the Kaiser Permanente Hesperia MOB project, a multi-step process has been utilized. The first step is trip generation, which estimates the total arriving and departing traffic volumes on a peak hour and daily basis. The traffic generation potential is forecast by applying the appropriate vehicle trip generation equations or rates to the project development tabulation.

The second step of the forecasting process is trip distribution, which identifies the origins and destinations of inbound and outbound project traffic volumes. These origins and destinations are typically based on demographics and existing/anticipated travel patterns in the study area.

The third step is traffic assignment, which involves the allocation of project traffic to study area streets and intersections. Traffic assignment is typically based on minimization of travel time, which may or may not involve the shortest route, depending on prevailing operating conditions and travel speeds. Traffic distribution patterns are indicated by general percentage orientation, while traffic assignment allocates specific volume forecasts to individual roadway links and intersection turning movements throughout the study area.

With the forecasting process complete and project traffic assignments developed, the impact of the proposed project is isolated by comparing operational (i.e., Levels of Service) conditions at the selected key intersections using existing and expected future traffic volumes without and with forecast project traffic. The need for site-specific and/or cumulative local area traffic improvements can then be evaluated and the significance of the project's impacts identified.

7.1 Project Traffic Generation

Traffic volumes expected to be generated by the proposed project during the weekday AM and PM peak hours, as well as on a daily basis, were estimated using rates published in the ITE *Trip Generation Manual*. Traffic volumes expected to be generated by the proposed project were based upon rates per 1,000 gross square feet for the project. ITE Land Use Code 720 (Medical-Dental Office) trip generation rates were used to forecast the traffic volumes expected to be generated by the proposed project.

The trip generation forecast for the proposed project is summarized in ***Table 7-1***. The trip generation forecast for the proposed project was submitted for review and approval by City of Hesperia staff. As presented in *Table 7-1*, the proposed project is expected to generate 131 vehicle trips (103 inbound trips and 28 outbound trips) during the weekday AM peak hour. During the weekday PM peak hour, the proposed project is expected to generate 196 vehicle trips (55 inbound trips and 141 outbound trips). Over a 24-hour period, the proposed project is forecast to generate 1,987 daily trip ends during a typical weekday (994 inbound trips and 994 outbound trips).

Table 7-1
PROJECT TRIP GENERATION [1]

LAND USE	SIZE	DAILY TRIP ENDS [2] VOLUMES	AM PEAK HOUR VOLUMES [2]			PM PEAK HOUR VOLUMES [2]		
			IN	OUT	TOTAL	IN	OUT	TOTAL
Medical Office [3]	55,000 GSF	1,987	103	28	131	55	141	196
TOTAL		**1,987**	**103**	**28**	**131**	**55**	**141**	**196**

[1] Source: ITE "Trip Generation", 9th Edition, 2012.
[2] Trips are one-way traffic movements, entering or leaving.
[3] ITE Land Use Code 720 (Medical-Dental Office Building) trip generation average rates.
- Daily Trip Rate: 36.13 trips/1,000 SF of floor area; 50% inbound/50% outbound
- AM Peak Hour Trip Rate: 2.39 trips/1,000 SF of floor area; 79% inbound/21% outbound
- PM Peak Hour Trip Rate: 3.57 trips/1,000 SF of floor area; 28% inbound/72% outbound

7.2 Project Traffic Distribution and Assignment

Project traffic volumes both entering and exiting the site have been distributed and assigned to the adjacent street system based on the following considerations:

- The site's proximity to major traffic corridors (i.e., I-15 Freeway, Escondido Avenue, Main Street, etc.);
- Expected localized traffic flow patterns based on adjacent roadway channelization and presence of traffic signals;
- Existing intersection traffic volumes;
- Existing site access ingress/egress schemes;
- Ingress/egress scheme planned for the MOB drop-off and pick-up area; and
- Nearby population and employment centers.

The project traffic volume distribution percentages during weekday AM and PM peak hours at the study intersections are illustrated in ***Figure 7-1***. The forecast traffic volumes for the proposed project at the study intersections for the weekday AM and PM peak hours are displayed in ***Figures 7-2*** and ***7-3***, respectively. The traffic volume assignments presented in *Figures 7-2* and *7-3* reflect the traffic distribution characteristics shown in *Figure 7-1* and the project traffic generation forecast presented in *Table 7-1*.

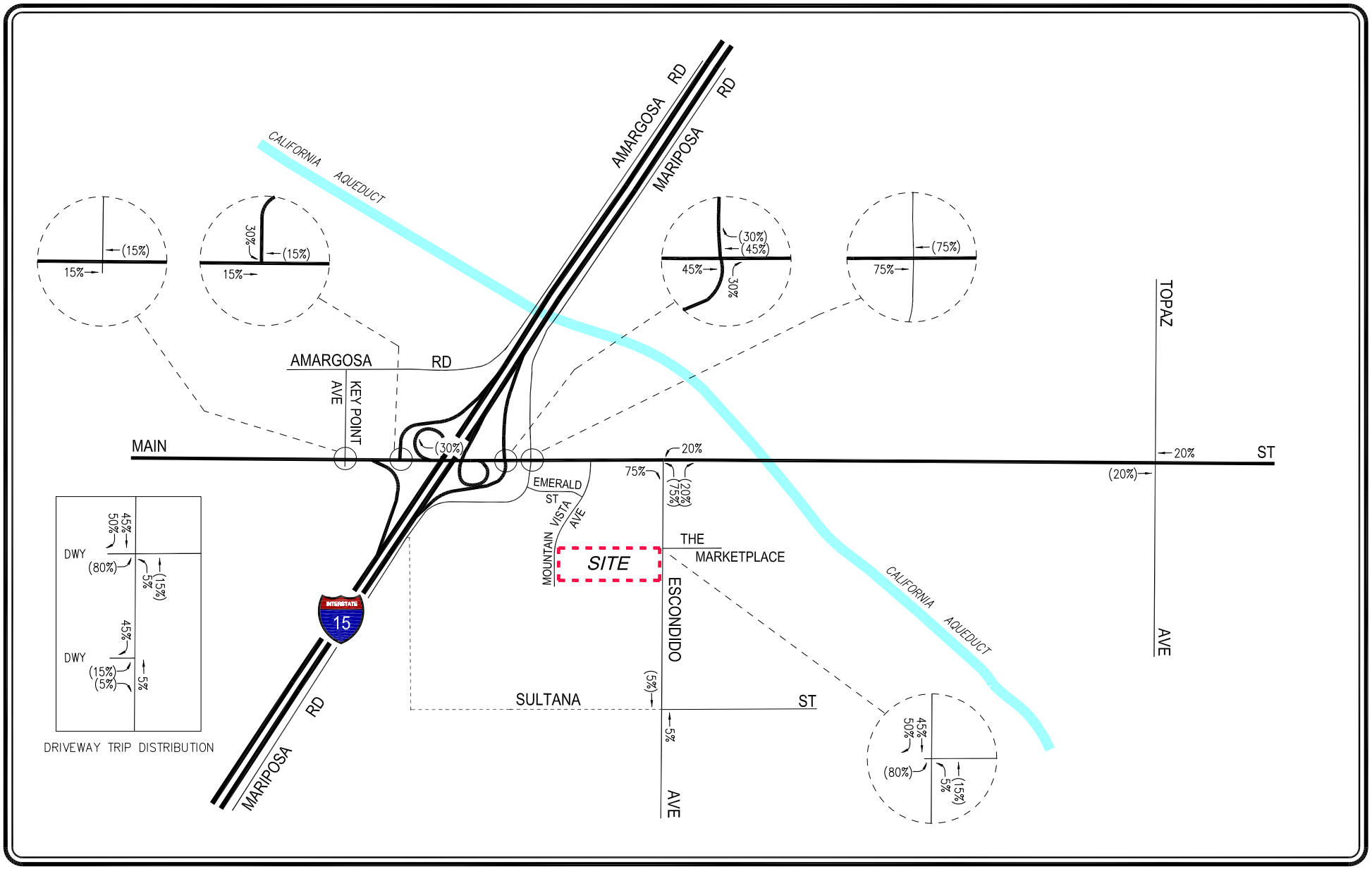

N

NOT TO SCALE

XX = INBOUND PERCENTAGE
(XX) = OUTBOUND PERCENTAGE

FIGURE 7-1
PROJECT TRIP DISTRIBUTION

LINSCOTT, LAW & GREENSPAN, engineers

KAISER PERMANENTE HESPERIA MOB PROJECT

o:\job_file\4246\dwg\f7-1.dwg LDP 09:01:10 10/23/2018 rodriquez

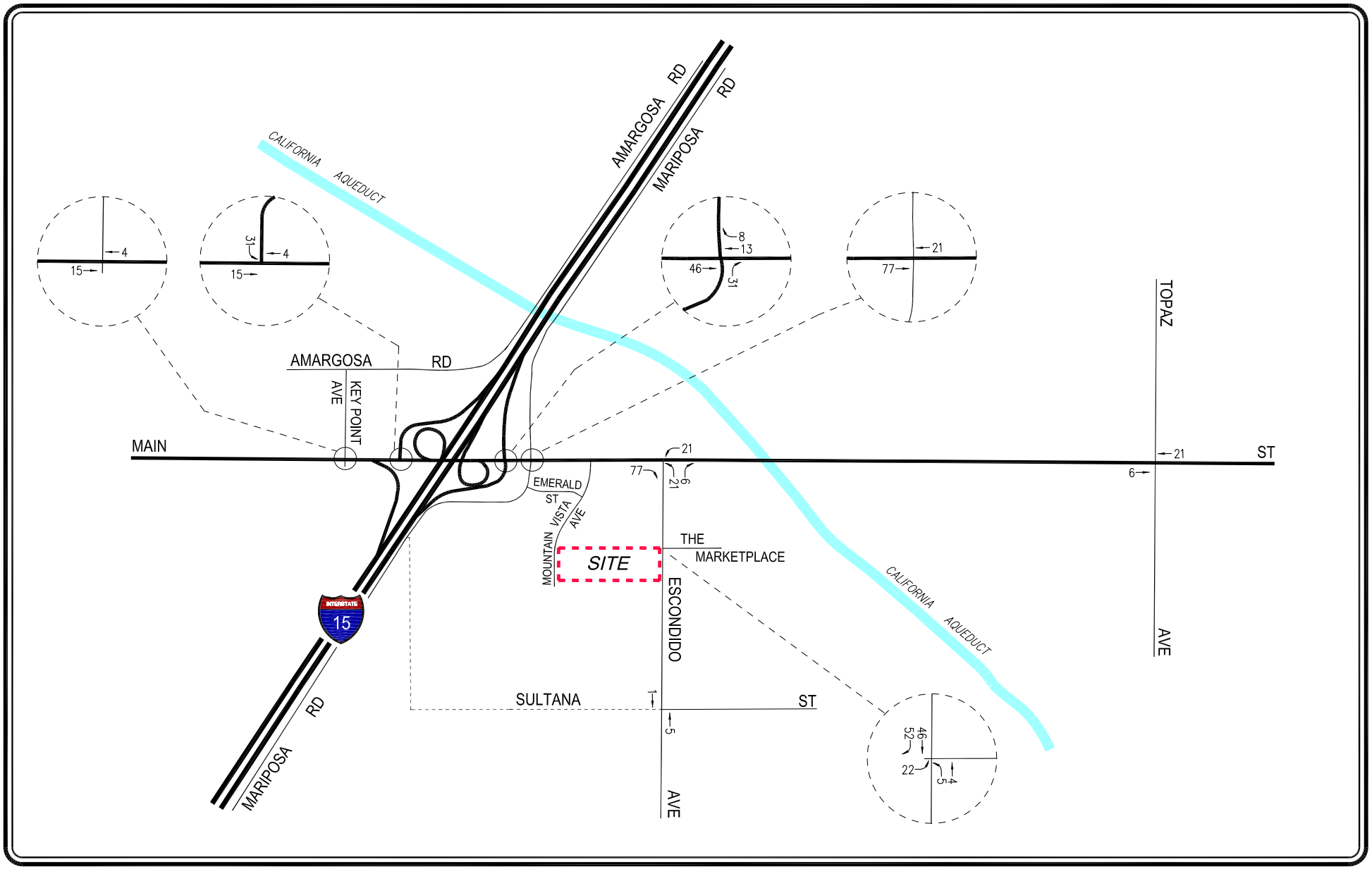

NOT TO SCALE

LINSCOTT, LAW & GREENSPAN, engineers

FIGURE 7-2
PROJECT TRAFFIC VOLUMES

WEEKDAY AM PEAK HOUR

KAISER PERMANENTE HESPERIA MOB PROJECT

o:\job_file\4246\dwg\f7-2.dwg LDP 08:59:28 10/23/2018 rodriquez

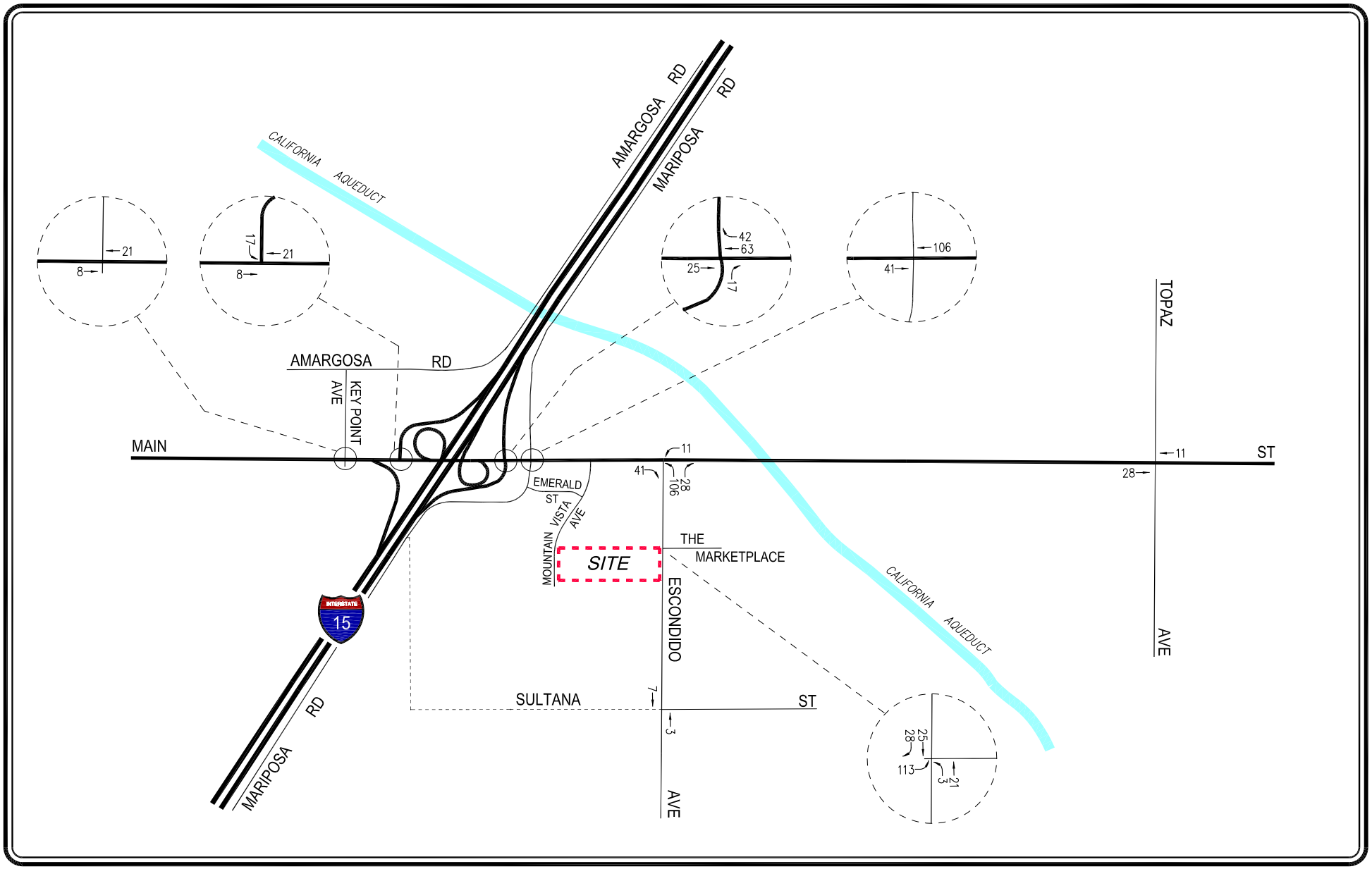

N

NOT TO SCALE

LINSCOTT, LAW & GREENSPAN, engineers

FIGURE 7-3
PROJECT TRAFFIC VOLUMES

WEEKDAY PM PEAK HOUR

KAISER PERMANENTE HESPERIA MOB PROJECT

o:\job_file\4246\dwg\f7-3.dwg LDP 09:00:26 10/23/2018 rodriquez

8.0 TRAFFIC IMPACT ANALYSIS METHODOLOGY

The study intersections were evaluated using the *Synchro 10* software package which implements the latest Highway Capacity Manual (HCM) operational methods. Specifically, the signalized methodology outlined in Chapter 19 of the *Highway Capacity Manual 6th Edition*[5], respectively, was utilized. This methodology estimates the average control delay for each of the subject movements and determines the level of service for each constrained movement. Average control delay for any particular movement is a function of the capacity of the approach and the degree of saturation. The overall average control delay is measured in seconds per vehicle, and the level of service is then calculated for the intersections as a whole. Intersection Levels of Service vary from LOS A (free flow) to LOS F (jammed condition). The six qualitative categories of Level of Service for signalized intersections have been defined along with the corresponding HCM control delay value range, as shown in ***Appendix B***.

The respective *Highway Capacity Manual* (HCM 2010) methodologies outlined in Chapter 19 for unsignalized/two-way stop-controlled (TWSC) intersections and Chapter 20 for unsignalized/all-way stop-controlled (AWSC) intersections were utilized for the analysis of the unsignalized location. The TWSC methodology estimates the average control delay for each minor-street movement (or shared movement) as well as major-street left-turns and determines the LOS for each constrained movement. Average control delay for any particular movement is a function of the capacity of the approach and the degree of saturation. The average control delay is measured in seconds per vehicle, and includes delay due to deceleration to a stop at the back of the queue from free-flow speed, move-up time within the queue, stopped delay at the front of the queue, and delay due to acceleration back to free-flow speed. A description of the HCM method and corresponding Level of Service also is provided in *Appendix B*.

8.1 Impact Criteria and Thresholds

The relative impact of the added project traffic volumes to be generated by the proposed project was evaluated based on analysis of existing and future operating conditions at the study intersections without and with the proposed project. The previously discussed capacity analysis procedures were utilized to evaluate the future *v/c* relationships and service level characteristics at each study intersection.

According to the City of Hesperia General Plan 2010[6] Circulation Element Implementation Policy CI-2.1, the City's LOS standard is LOS D for all intersections, except during peak hours at freeway interchanges and on Bear Valley Road, Main Street/Phelan Road, and US-395 during peak hours where LOS E is acceptable. It should be noted that this policy is consistent with the San Bernardino CMP level of service standard of LOS E.

---

[5] *Highway Capacity Manual 6th Edition*, Transportation Research Board of the National Academies of Sciences-Engineering-Medicine, 2016.
[6] *City of Hesperia General Plan 2010*, Circulation Element, City of Hesperia, 2010.

As such, pursuant to the City of Hesperia traffic impact study requirements and City of Hesperia General Plan 2010 Circulation Element, the following criteria shall be used to determine if the addition of project traffic should be considered to have a significant impact at the study intersection:

- If the study intersection is operating at LOS of A, B, C, D or E for any study scenario without the project traffic in which the addition of project traffic causes the intersection to degrade to LOS F for freeway interchanges and intersections along Bear Valley Road, Main Street/Phelan Road, and US-395.
- If the study intersection is operating at LOS of A, B, C, or D for any study scenario without the project traffic in which the addition of project traffic causes the intersection to degrade to LOS E.

8.2 Traffic Impact Analysis Scenarios

Traffic impacts at the study intersections were analyzed for the following conditions:

[a] Existing conditions.

[b] Existing with project conditions.

[c] Condition [b] with implementation of project mitigation measures, where necessary.

[d] Condition [a] plus two percent (2.0%) annual ambient traffic growth through year 2020 (i.e., Opening Year) and with completion and occupancy of the related projects (i.e., future without project conditions).

[e] Condition [d] with completion and occupancy of the proposed project.

[f] Condition [e] with implementation of project mitigation measures, where necessary.

The traffic volumes for each new condition were added to the volumes in the prior condition to determine the change in capacity utilization at the study intersections.

9.0 TRAFFIC ANALYSIS

The traffic impact analysis prepared for the study intersections for the proposed project development program using the HCM methodology and application of the City of Hesperia significant traffic impact criteria is summarized in ***Table 9-1***. The HCM data worksheets for the study intersections are contained in *Appendix B.*

9.1 Existing Conditions

9.1.1 *Existing Conditions*

As indicated in column [1] of *Table 9–1*, all of the eight study intersections are presently operating at LOS D or better during the weekday AM and PM peak hours under existing conditions. The existing traffic volumes at the study intersections during the weekday AM and PM peak hours are displayed in *Figures 5–1* and *5–2*, respectively.

9.1.2 *Existing With Project Conditions*

As shown in column [2] of *Table 9–1*, application of the City's threshold criteria to the "With Proposed Project" scenario indicates that the proposed project is not expected to create a significant impact at any of the study intersections. Incremental, but not significant, impacts are noted at the study intersections. The existing with project traffic volumes at the study intersections during the weekday AM and PM peak hours are illustrated in ***Figures 9–1*** and ***9–2***, respectively.

9.2 Future (Opening Year) Conditions

9.2.1 *Future (Opening Year) Without Project Conditions*

The future cumulative baseline conditions were forecast based on the addition of traffic generated by the completion and occupancy of the related projects, as well as the growth in traffic due to the combined effects of continuing development, intensification of existing developments and other factors (i.e., ambient growth). The *v/c* ratios at all of the study intersections are incrementally increased with the addition of ambient traffic and traffic generated by the related projects listed in *Table 6–1*. As presented in column [3] of *Table 9–1*, six of the eight study intersections are expected to operate at LOS E or better during the weekday AM and PM peak hours with the addition of growth in ambient traffic and related projects traffic under the future without project conditions. The following two study intersections are expected to operate at LOS F during the peak hours shown below with the addition of growth in ambient traffic and related projects traffic under the future without project conditions:

- Int. No. 6: Escondido Ave./Sultana St. AM Peak Hour: Delay = 52.9 sec., LOS F
- Int. No. 7: Topaz Ave./Main St. PM Peak Hour: Delay = 82.8 sec., LOS F

Table 9-1
SUMMARY OF DELAYS AND LEVELS OF SERVICE
WEEKDAY AM AND PM PEAK HOURS

NO.	INTERSECTION	TRAFFIC CONTROL	PEAK HOUR	[1] YEAR 2018 EXISTING DELAY [b]	[1] YEAR 2018 EXISTING LOS [c]	[2] YEAR 2018 EXISTING WITH PROJECT DELAY [b]	[2] YEAR 2018 EXISTING WITH PROJECT LOS [c]	[2] CHANGE IN DELAY [(2)-(1)]	[2] SIGNIF. IMPACT [d]	[3] YEAR 2020 OPENING YEAR WITHOUT PROJECT DELAY [b]	[3] YEAR 2020 OPENING YEAR WITHOUT PROJECT LOS [c]	[4] YEAR 2020 OPENING YEAR WITH PROJECT DELAY [b]	[4] YEAR 2020 OPENING YEAR WITH PROJECT LOS [c]	[4] CHANGE IN DELAY [(4)-(3)]	[4] SIGNIF. IMPACT [d]
1	Key Point Avenue/	Signalized	AM	22.8	C	22.8	C	0.0	No	21.8	C	21.8	C	0.0	No
	Main Street		PM	31.9	C	31.9	C	0.0	No	34.9	C	35.0	C	0.1	No
2	I-15 Freeway SB Off-Ramp/	Signalized	AM	13.6	B	13.7	B	0.1	No	14.1	B	14.2	B	0.1	No
	Main Street		PM	17.8	B	17.9	B	0.1	No	20.5	C	20.7	C	0.2	No
3	I-15 Freeway NB Ramps/	Signalized	AM	11.2	B	12.1	B	0.9	No	14.5	B	15.4	B	0.9	No
	Main Street		PM	22.2	C	22.7	C	0.5	No	30.6	C	31.9	C	1.3	No
4	Mariposa Avenue/	Signalized	AM	24.5	C	24.5	C	0.0	No	29.7	C	29.7	C	0.0	No
	Main Street		PM	34.1	C	34.5	C	0.4	No	47.2	D	52.6	D	5.4	No
5	Escondido Avenue/	Signalized	AM	46.3	D	46.9	D	0.6	No	47.8	D	48.5	D	0.7	No
	Main Street		PM	52.6	D	64.1	E	11.5	No	64.2	E	78.3	E	14.1	No
6	Escondido Avenue/	TWSC	AM	33.9	D	34.5	D	0.6	No	52.9	F	54.3	F	1.4	Yes
	Sultana Street		PM	17.6	C	18.0	C	0.4	No	23.6	C	24.1	C	0.5	No
7	Topaz Avenue/	Signalized	AM	30.3	C	30.9	C	0.6	No	57.5	E	58.7	E	1.2	No
	Main Street		PM	27.2	C	28.0	C	0.8	No	82.8	F	87.4	F	4.6	Yes
8	Escondido Avenue/	Signalized	AM	13.2	B	13.8	B	0.6	No	15.6	B	16.0	B	0.4	No
	The Marketplace		PM	30.5	C	33.2	C	2.7	No	36.1	D	39.1	D	3.0	No

[a] Intersection analysis based on the Highway Capacity Manual operational analysis methodologies for signalized and unsignalized intersections, per the City of Hesperia's analysis guidelines.

[b] Reported control delay values in seconds per vehicle. For two-way stop controlled intersections, reported control delay values represent the delays associated with the most constrained approach of the intersection.

[c] Signalized Intersection Levels of Service are based on the following criteria:

Control Delay (s/veh)	LOS
<= 10	A
> 10-20	B
> 20-35	C
> 35-55	D
> 55-80	E
> 80	F

Unsignalized Intersection Levels of Service are based on the following criteria:

Control Delay (s/veh)	LOS
<= 10	A
> 10-15	B
> 15-25	C
> 25-35	D
> 35-50	E
> 50	F

[d] Refer to report text for significant impact thresholds.

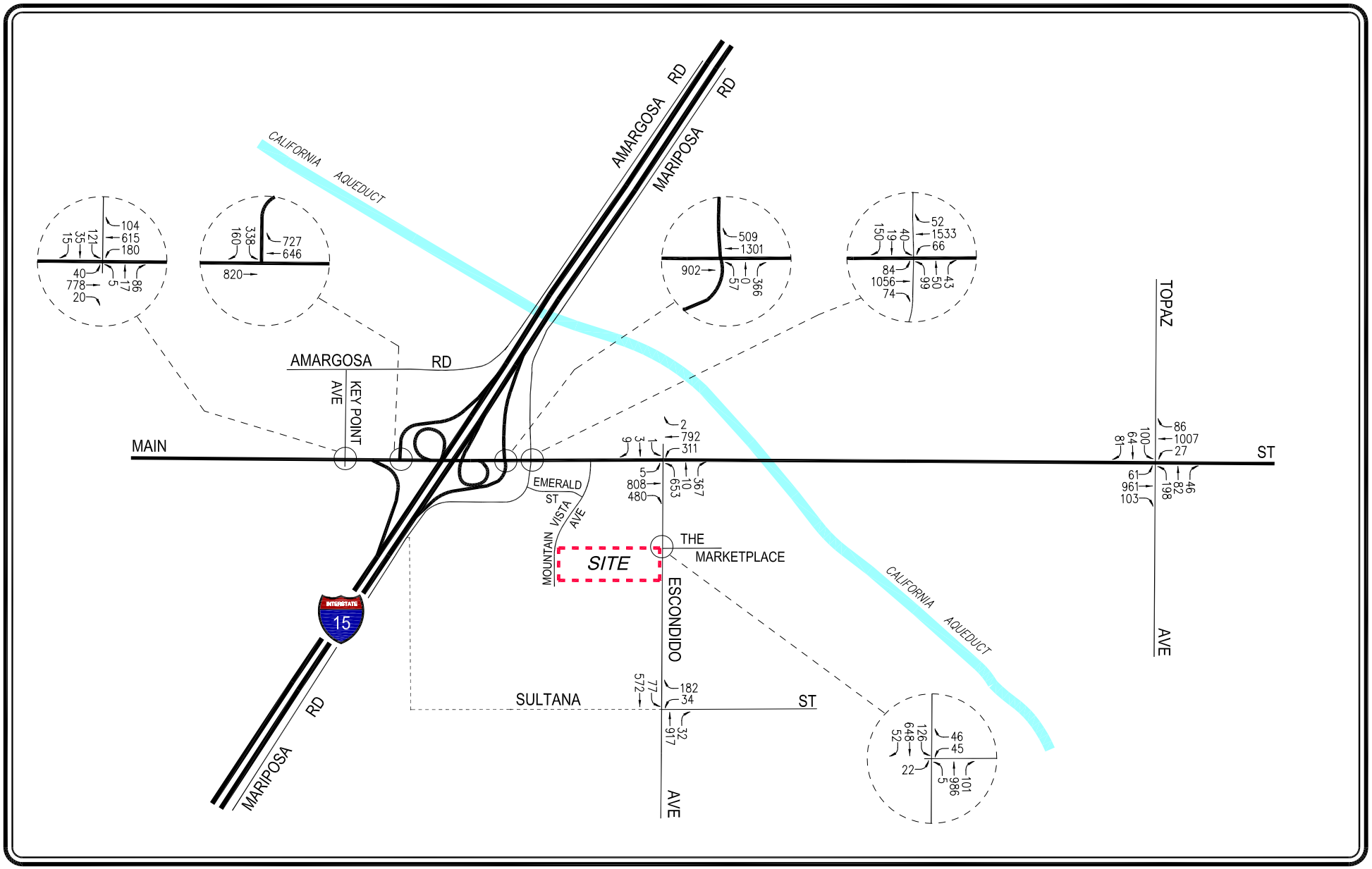

NOT TO SCALE

FIGURE 9-1
EXISTING WITH PROJECT TRAFFIC VOLUMES

WEEKDAY AM PEAK HOUR

KAISER PERMANENTE HESPERIA MOB PROJECT

LINSCOTT, LAW & GREENSPAN, engineers

o:\job_file\4246\dwg\f9-1.dwg LDP 08:59:56 10/23/2018 rodriquez

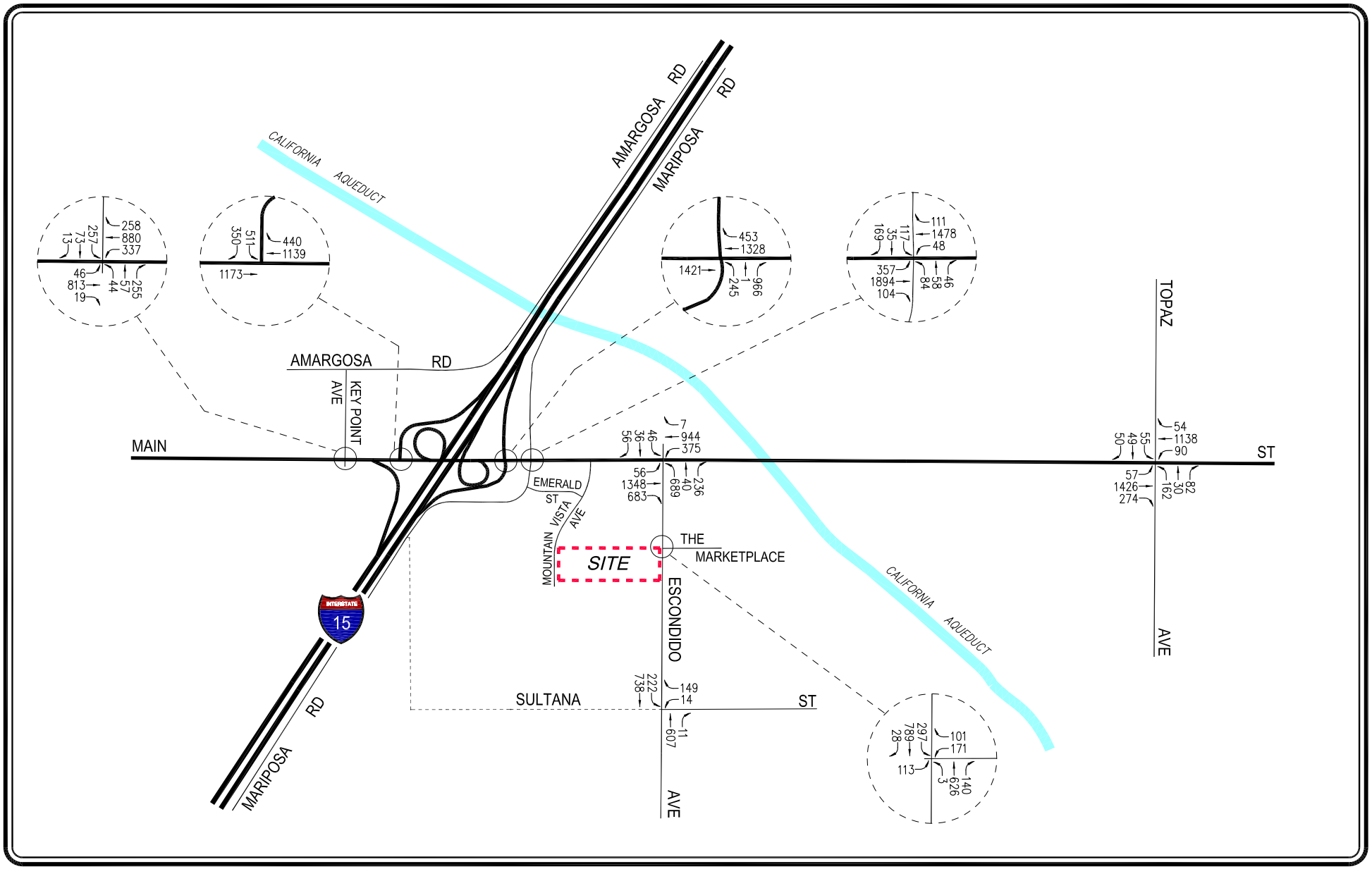

NOT TO SCALE

FIGURE 9-2
EXISTING WITH PROJECT TRAFFIC VOLUMES

WEEKDAY PM PEAK HOUR

KAISER PERMANENTE HESPERIA MOB PROJECT

LINSCOTT, LAW & GREENSPAN, engineers

o:\job_file\4246\dwg\f9-2.dwg LDP 08:59:00 10/23/2018 rodriquez

The future without project (existing, ambient growth and related projects) traffic volumes at the study intersections during the weekday AM and PM peak hours are presented in ***Figures 9–3*** and ***9–4***, respectively.

9.2.2 *Future (Opening Year) With Project Conditions*

As shown in column [4] of *Table 9–1*, application of the City Hesperia's threshold criteria to the "With Proposed Project" scenario indicates that the proposed project is expected to result in a significant impact at two of the eight study intersections. Incremental, but not significant, impacts are noted at the remaining City of Hesperia study intersections. As presented in column [4] of *Table 9-1*, application of the City of Hesperia's threshold criteria to the "Future With Proposed Project" scenario indicates that the project is expected to create a significant impact at the following study intersections:

- Int. No. 6: Escondido Avenue/Sultana Street: Weekday AM Peak Hour
- Int. No. 7: Topaz Avenue/Main Street: Weekday PM Peak Hour

The future with project (existing, ambient growth, related projects and project) traffic volumes at the study intersections during the weekday AM and PM peak hours are illustrated in ***Figures 9–5*** and ***9–6***, respectively.

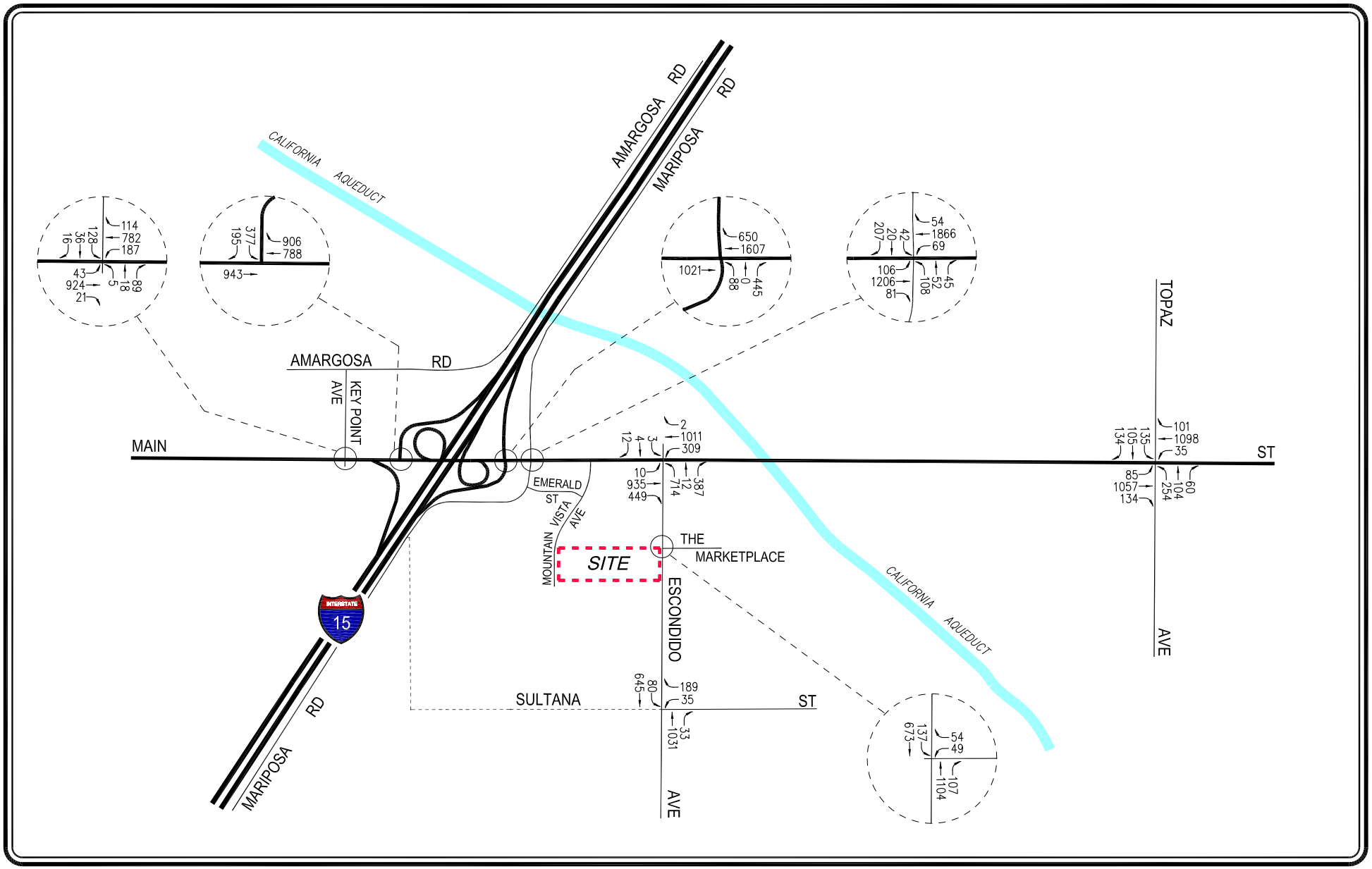

N

NOT TO SCALE

FIGURE 9-3

FUTURE (OPENING YEAR) WITHOUT PROJECT TRAFFIC VOLUMES

WEEKDAY AM PEAK HOUR

KAISER PERMANENTE HESPERIA MOB PROJECT

LINSCOTT, LAW & GREENSPAN, engineers

o:\job_file\4246\dwg\f9-3.dwg LDP 08:58:37 10/23/2018 rodriquez

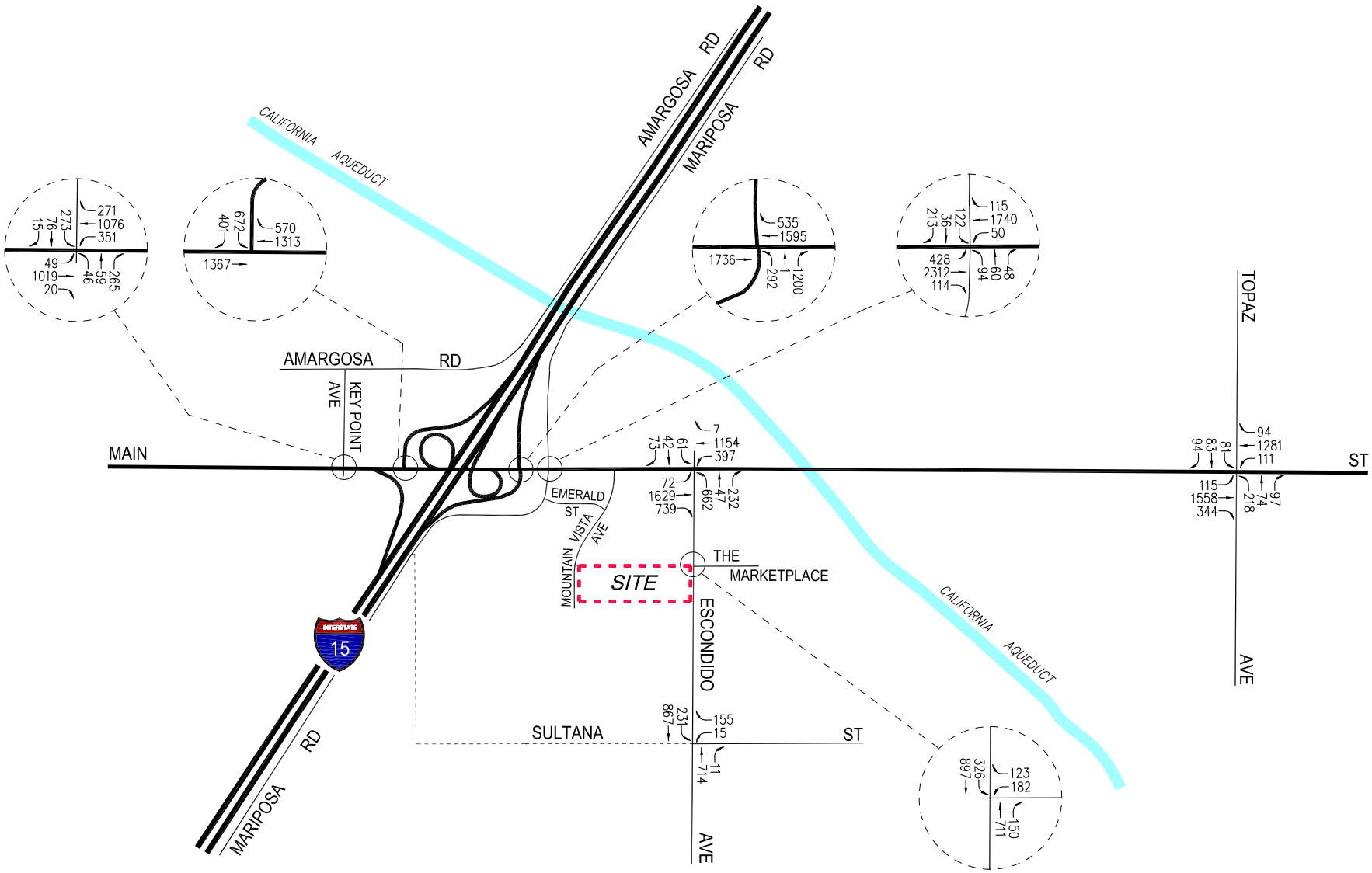

NOT TO SCALE

FIGURE 9-4
FUTURE (OPENING YEAR) WITHOUT PROJECT TRAFFIC VOLUMES

WEEKDAY PM PEAK HOUR

KAISER PERMANENTE HESPERIA MOB PROJECT

LINSCOTT, LAW & GREENSPAN, engineers

o:\job_file\4246\dwg\f9-4.dwg LDP 08:58:04 10/23/2018 rodriquez

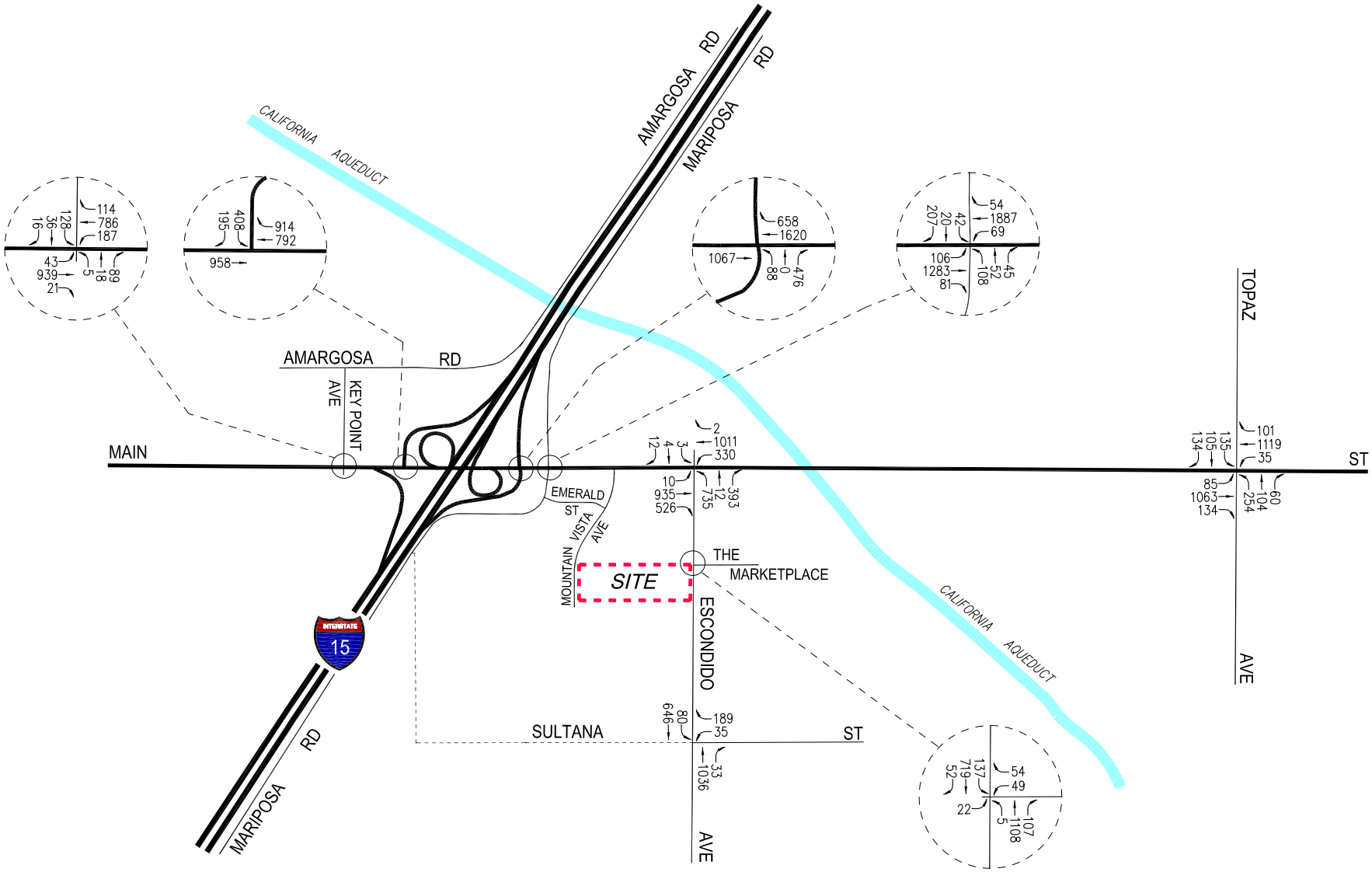

N

NOT TO SCALE

FIGURE 9-5

FUTURE (OPENING YEAR) WITH PROJECT TRAFFIC VOLUMES

WEEKDAY AM PEAK HOUR

KAISER PERMANENTE HESPERIA MOB PROJECT

LINSCOTT, LAW & GREENSPAN, engineers

o:\job_file\4246\dwg\f9-5.dwg LDP 08:57:34 10/23/2018 rodriquez

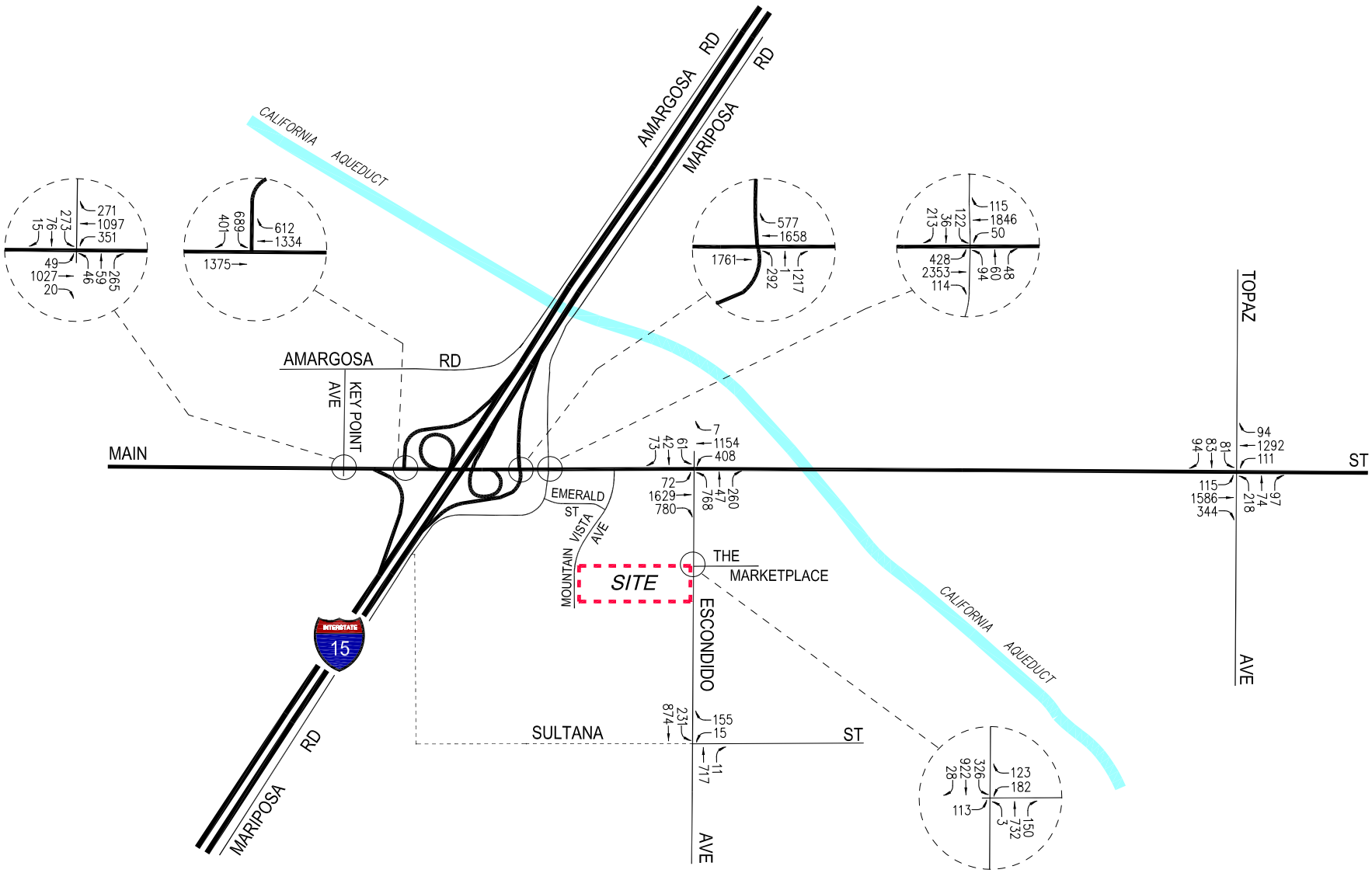

NOT TO SCALE

FIGURE 9-6
FUTURE (OPENING YEAR) WITH PROJECT TRAFFIC VOLUMES

WEEKDAY PM PEAK HOUR

KAISER PERMANENTE HESPERIA MOB PROJECT

LINSCOTT, LAW & GREENSPAN, engineers

o:\job_file\4246\dwg\f9-6.dwg LDP 08:56:08 10/23/2018 rodriquez

10.0 TRANSPORTATION IMPROVEMENT MEASURES

As noted in Section 3.0, Site Access and Circulation, improvements are proposed at the Escondido Avenue/The Marketplace intersection in order to create the west leg of the intersection (i.e., the project driveway) and incorporate the west leg into the existing traffic signal operation via a traffic signal modification. The proposed improvements at the Escondido Avenue/The Marketplace intersection would be constructed by the project Applicant per City of Hesperia design standards.

As summarized in Section 9.0, Traffic Analysis, the proposed project is forecast to result in a significant cumulative impact at the following study intersections:

- Int. No. 6: Escondido Avenue/Sultana Street
- Int. No. 7: Topaz Avenue/Main Street

As mentioned previously, the project site is located within the Hesperia Main Street and Freeway Corridor Specific Plan area. According to the Hesperia Main Street and Freeway Corridor Specific Plan document, all new development within the Specific Plan area will be required to provide a fair-share contribution to the necessary improvements. The City of Hesperia has adopted a development fee program to collect fair-share contributions.

The Hesperia Main Street and Freeway Corridor Specific Plan Nexus Study includes a list of projects/measures proposed partially or entirely within the Specific Plan area. The following projects are applicable to the Kaiser Permanente Hesperia MOB project study area:

- Widen Escondido Avenue between Main Street and Sultana Street from 2 lanes to 4 lanes
- Widen Main Street between I-15 Freeway and Escondido Avenue from 4 lanes to 6 lanes
- Widen Main Street between Escondido Avenue and Eleventh Avenue from 4 lanes to 6 lanes, including widening of the bridge over the California Aqueduct

For the Topaz Avenue/Main Street intersection, an additional eastbound and westbound through lane (i.e., a subset of the improvements identified in the third bullet above) would reduce the project's significant impact to less than significant levels. Therefore, the Kaiser Permanente Hesperia MOB project is subject to provide fair-share contributions for the necessary improvements as outlined above through the payment of the appropriate development impact fee.

For the Escondido Avenue/Sultana Street intersection, the Escondido Avenue widening from 2 lanes to 4 lanes between Main Street and Sultana Street outlined above has been completed. The recommended mitigation consists of a fair-share contribution towards a traffic signal installation at the intersection to reduce the project's significant impact to less than significant levels. The percentage of fair share is calculated as the ratio of the increase in delay from project trips divided by the difference between total delay (including the project) and delay at acceptable Level of

Service. The calculated fair share percentage for the project at the Escondido Avenue/Sultana Street intersection is 7.25 percent.

11.0 CALIFORNIA DEPARTMENT OF TRANSPORTATION ANALYSIS

A supplemental freeway analysis was prepared based on the latest edition of the Highway Capacity Manual (HCM 2010) operational analysis methodologies pursuant to the California Department of Transportation's (Caltrans) *Guide for the Preparation of Traffic Impact Studies*[7]. According to the Caltrans document, the LOS for operating State highway facilities is based upon measures of effectiveness (MOEs). For mainline freeway segments, the MOE is determined based on density in passenger cars per mile per lane (pc/mi/ln). Caltrans endeavors to maintain a target LOS at the transition between LOS "C" and LOS "D" on State highway facilities, however, Caltrans acknowledges that this may not always be feasible and recommends that the lead agency consult with Caltrans to determine the appropriate target LOS. If an existing State highway facility is operating at less than the appropriate target LOS, the existing MOE should be maintained.

11.1 Freeway Analysis

For mainline freeway segments, the MOE is determined based on density in passenger cars per mile per lane (pc/mi/ln). Furthermore, based on coordination with Caltrans, when a mainline freeway segment is operating near capacities under existing conditions (i.e., LOS E or LOS F), the corresponding LOS is also determined based on speed in miles per hour.

The following mainline freeway segments along the I-15 Freeway have been identified for analysis based on their proximity to the project site and the expected level of project-generated traffic. These segments are forecast to experience a relatively greater percentage of project-related traffic than other mainline freeway segment locations:

- I-15 Freeway north of Main Street
- I-15 Freeway south of Main Street

The proposed project's effect on the regional mainline freeway system has been determined based on a review of available traffic volume data for existing weekday peak hour conditions. A review was undertaken of traffic volume data published in the *Traffic Volumes on the California State Highway System*[8] and the Caltrans' Traffic Data Branch – California Freeway Performance Measurement System (PeMS). The existing traffic volumes were increased by an annual average growth rate of 2.0% per year so as to reflect the future year 2020 cumulative without project analysis condition.

The selected freeway segment lane configurations used in the analysis are based on information obtained from field reviews. The freeway analysis is based on the number of mainline freeway lanes only. Along some freeway segments, auxiliary lanes are provided to facilitate entering and exiting freeway traffic to and from the freeway mainline. Although some of the freeway auxiliary lanes accommodate through traffic, these have not been considered so as to provide a conservative analysis to determine the effects of the proposed project. The HCM operational analysis for freeway

[7] *Guide for the Preparation of Traffic Impact Studies*, State of California Department of Transportation, December 2002.
[8] *2014 Traffic Volumes on the California State Highway System*, California State Transportation Agency, Department of Transportation Division of Traffic Operations, 2014.

segments is based on density (i.e., passenger cars per mile per lane [pc/mi/ln]). The Caltrans freeway mainline traffic analysis is summarized in ***Table 11-1*** for all traffic analysis conditions. Copies of the HCM freeway analysis data worksheets are provided in the ***Appendix C***.

11.1.1 *Existing and Existing With Project Conditions*

As shown in *Table 11-1*, the two study freeway segments are presently operating at LOS C or better during the weekday AM and PM peak hours under existing conditions. With the addition of the proposed project traffic, all study freeway segments are expected to continue to operate at LOS C or better during the weekday AM and PM peak hours. As shown in *Table 11-1*, application of the Caltrans LOS standards and guidelines to the "Existing With Project" scenario indicates that the proposed project is not expected to create traffic impacts at any of the study freeway segments.

11.1.2 *Future Without and Future With Project Conditions*

Growth in traffic due to the combined effects of continuing development, intensification of existing development, and other factors, were assumed to be 2.0 percent per year through year 2020 (i.e., Opening Year) resulting in a 6.0 percent increase in background ambient traffic growth. With the addition of regional growth (i.e., year 2020 without project conditions), all study freeway segments are expected to continue to operate at LOS C or better during the weekday AM and PM peak hours. As shown in *Table 11-1*, application of the Caltrans LOS standards and guidelines to the year 2020 with project scenario indicates that the proposed project is not expected to create traffic impacts at any of the study freeway segments.

11.2 Intersection Analysis

Supplemental intersection analyses were also prepared for the State facility intersections within the project study area pursuant to Caltrans' *Guide for the Preparation of Traffic Impact Studies*. According to the Caltrans document for state-controlled study intersections, the MOE is determined based on control delay in seconds per vehicle (sec/veh). The intersection analyses were prepared utilizing the *Synchro 9* software package which implements the HCM 2010 Highway Capacity Manual operational methods. A *Synchro* network was created based on current traffic signal timing charts and field review of existing conditions at the Caltrans study intersections. In addition, specifics such as lane configurations, lane widths, storage lengths, crosswalk locations, posted speed limits, traffic signal phasing and cycle length, traffic volumes, etc., were coded to complete the existing network.

The following two intersections have been identified for analysis based on their proximity to the project site:

- Intersection No. 2: I-15 Freeway Southbound Off-Ramp/Main Street
- Intersection No. 3: I-15 Freeway Northbound Ramps/Main Street

Table 11-1
CALTRANS FREEWAY IMPACT ANALYSIS [1]
WEEKDAY AM AND PM PEAK HOURS

Freeway Segment	Peak Hour	Direction	Existing Year 2018 Traffic Volumes [2]	Existing Year 2018 Density (pc/mi/ln) [3]	Existing Year 2018 LOS [4]	Existing Year 2018 Speed (mph) [2]	Existing Year 2018 LOS [5]	Project Trip Ends [6]	Existing Year 2018 With Project Traffic Volumes [7]	Existing Year 2018 With Project Density (pc/mi/ln) [3]	Existing Year 2018 With Project LOS [4]	Density Increase With Project [8]	Impact	Future Year 2020 Pre-Project Traffic Volumes [9]	Future Year 2020 Pre-Project Density (pc/mi/ln) [3]	Future Year 2020 Pre-Project LOS [4]	Project Trip Ends [6]	Future Year 2020 With Project Traffic Volumes [10]	Future Year 2020 With Project Density (pc/mi/ln) [3]	Future Year 2020 With Project LOS [4]	Density Increase With Project [11]	Impact
I-15 Freeway																						
North of Main Street	AM	NB	1,883	11.0	A	61.5	D	8	1,891	11.0	A	0.0	No	1,959	11.4	B	8	1,967	11.4	B	0.0	No
		SB	2,062	10.2	A	59.4	E	31	2,093	10.4	A	0.2	No	2,145	10.6	A	31	2,176	10.8	A	0.2	No
	PM	NB	1,896	9.3	A	61.3	D	42	1,938	9.5	A	0.2	No	1,972	9.7	A	42	2,014	9.9	A	0.2	No
		SB	2,661	13.7	B	62.3	D	17	2,678	13.8	B	0.1	No	2,769	14.3	B	17	2,786	14.4	B	0.1	No
South of Main Street	AM	NB	2,756	14.1	B	66.4	A/B	31	2,787	14.3	B	0.2	No	2,867	14.7	B	31	2,898	14.8	B	0.1	No
		SB	2,814	14.7	B	66.2	A/B	8	2,822	14.7	B	0.0	No	2,928	15.3	B	8	2,936	15.3	B	0.0	No
	PM	NB	3,861	19.3	C	65.2	A/B	17	3,878	19.4	C	0.1	No	4,017	20.2	C	17	4,034	20.3	C	0.1	No
		SB	2,344	12.2	B	66.5	A/B	42	2,386	12.4	B	0.2	No	2,439	12.7	B	42	2,481	12.9	B	0.2	No

[1] Freeway analysis based on the Highway Capacity Manual 2010, operational analysis methodologies, per the Caltrans' *Guide for the Preparation of Traffic Impact Studies* , December 2002.
[2] Source: Caltrans PeMS website, 2017. Data reflects the 85th percentile volumes and speeds for weekday AM and PM peak period volumes from October 2016. An ambient growth rate of two percent (2.00%) per year was applied to grow the volumes to year 2017.
[3] pc/mi/ln: passenger cars per mile per lane.
[4] Freeway mainline Levels of Service by density were based on the following criteria:

Density (pc/mi/ln)	LOS	Density (pc/mi/ln)	LOS
≤ 11	A	> 26-35	D
> 11-18	B	> 35-45	E
> 18-26	C	> 45	F

[5] Freeway mainline Levels of Service by minimum speeds were based on the following criteria:

Speed (mph)	LOS	Speed (mph)	LOS
≥ 65.0	A	<64.6-59.7	D
≥ 65.0	B	<59.7-52.2	E
<65.0-64	C	<52.2	F

[6] Based on the project trip generation and trip distribution for the project.
[7] [2] + [6]
[8] Derived by subtracting the density of the existing with project conditions with the existing conditions pursuant to the Highway Capacity Software (HCS) worksheets which report density results to one decimal place.
[9] Derived by combining the existing traffic volumes increased by an ambient growth rate of 2.00% per year to the year 2020.
[10] [9] + [6]
[11] Derived by subtracting the density of the year 2020 with project conditions with the year 2020 without project conditions pursuant to the Highway Capacity Software (HCS) worksheets which report density results to one decimal place.

Table 11-2 summarizes the intersection analyses for the existing, existing with project, and Year 2020 future conditions (i.e., Opening Year) both without and with the proposed project. The first column [1] of *Table 11-2* presents a summary of existing traffic conditions. The second column [2] presents existing with project traffic conditions based on existing intersection geometry. The third column [3] presents Year 2020 traffic conditions based on existing intersection geometry, but without any project-generated traffic. The fourth column [4] presents future forecast traffic conditions with the addition of project traffic.

As shown in *Table 11-2,* application of the Caltrans LOS standards and guidelines to the "Existing With Project" and "Year 2020 With Project" scenarios indicate that the proposed project is not projected to result in impacts at the Caltrans intersection locations. The corresponding weekday AM and PM peak hour HCM worksheets are contained in *Appendix C*.

11.3 Ramp Vehicle Queuing Analysis

The proposed project is expected to add 10 or more vehicle trips during the weekday AM peak hour to some of the adjacent freeway off-ramp locations, which is the threshold for preparation of a Caltrans ramp analysis. Therefore, a detailed review was undertaken with respect to vehicle queuing on the freeway off-ramp approaches at two locations. The queuing analysis was prepared utilizing the *Synchro 9* software package which implements the HCM 2010 operational analysis methodologies. In forecasting vehicle queuing, the *Synchro* software considers traffic volume data, lane configurations, traffic signal timing and phasing for signalized locations, and available vehicle storage lengths for the respective traffic movements. The vehicle queuing review has been prepared using the respective weekday AM and PM peak hour traffic volume forecasts for existing, existing with project, and Year 2020 conditions both without and with the proposed project.

Each of the analyzed freeway ramp intersection approaches were reviewed in terms of expected maximum vehicle queues (i.e., 95th percentile queues) which represent the maximum back of vehicle queues with 95th percentile traffic volumes. The corresponding maximum vehicle queue lengths were then compared with the 85th percentile available ramp storage lengths pursuant to Caltrans recommendation.

As presented in ***Table 11-3***, adequate 85th percentile storage areas are provided to accommodate the forecast 95th percentile queues at the off-ramp locations under all analysis conditions. Therefore, vehicle queuing back onto the I-15 Freeway mainline travel lanes is not expected. The corresponding weekday AM peak hour and PM peak hour HCM worksheets for purposes of determining the 95th percentile vehicle queues also are contained in *Appendix C*.

Table 11-2
CALTRANS INTERSECTION IMPACT ANALYSIS [a]

NO.	INTERSECTION	TRAFFIC CONTROL	PEAK HOUR	[1] YEAR 2018 EXISTING DELAY [b]	[1] YEAR 2018 EXISTING LOS [c]	[2] YEAR 2018 EXISTING W/ PROJECT DELAY [b]	[2] YEAR 2018 EXISTING W/ PROJECT LOS [c]	[2] CHANGE IN DELAY [(2)-(1)]	[2] IMPACT	[3] YEAR 2020 FUTURE PRE-PROJECT W/ AM. GROW. & REL. PROJ. DELAY [b]	[3] YEAR 2020 FUTURE PRE-PROJECT W/ AM. GROW. & REL. PROJ. LOS [c]	[4] YEAR 2020 FUTURE W/ PROJECT DELAY [b]	[4] YEAR 2020 FUTURE W/ PROJECT LOS [c]	[4] CHANGE IN DELAY [(4)-(3)]	[4] IMPACT
2	I-15 Freeway SB Off-Ramp/ Main Street	Signalized	AM	13.6	B	13.7	B	0.1	No	14.1	B	14.2	B	0.1	No
			PM	17.8	B	17.9	B	0.1	No	20.5	C	20.7	C	0.2	No
3	I-15 Freeway NB Ramps/ Main Street	Signalized	AM	11.2	B	12.1	B	0.9	No	14.5	B	15.4	B	0.9	No
			PM	22.2	C	22.7	C	0.5	No	30.6	C	31.9	C	1.3	No

[a] Intersection analysis based on the Highway Capacity Manual operational analysis methodologies, per the Caltrans' *Guide for the Preparation of Traffic Impact Studies, December 2002.*

[b] Reported control delay values in seconds per vehicle.

[c] Signalized Intersection Levels of Service are based on the following criteria:

Control Delay (s/veh)	LOS
<= 10	A
> 10-20	B
> 20-35	C
> 35-55	D
> 55-80	E
> 80	F

Table 11-3
SUMMARY OF FREEWAY OFF-RAMP VEHICLE QUEUING ANALYSIS [a]
WEEKDAY AM AND PM PEAK HOURS

NO.	INTERSECTION	PEAK HOUR	85th PERCENTILE AVAILABLE OFF-RAMP STORAGE [b] (FEET)	EXISTING YEAR 2018		EXISTING YEAR 2018 WITH PROJECT		FUTURE YEAR 2020 WITHOUT PROJECT		FUTURE YEAR 2020 WITH PROJECT	
				95th PERCENTILE QUEUE [c] (FEET)	EXCEEDS 85th PERCENTILE STORAGE? (YES/NO)	95th PERCENTILE QUEUE [c] (FEET)	EXCEEDS 85th PERCENTILE STORAGE? (YES/NO)	95th PERCENTILE QUEUE [c] (FEET)	EXCEEDS 85th PERCENTILE STORAGE? (YES/NO)	95th PERCENTILE QUEUE [c] (FEET)	EXCEEDS 85th PERCENTILE STORAGE? (YES/NO)
2	I-15 Freeway SB Off-Ramp/ Main Street	AM	2,820	460	No	475	No	550	No	565	No
		PM	2,820	735	No	750	No	923	No	948	No
3	I-15 Freeway NB Ramps/ Main Street	AM	2,930	455	No	488	No	613	No	650	No
		PM	2,930	995	No	1,008	No	1,313	No	1,348	No

[a] Refer to calculation worksheets in Appendix C.
[b] Available storage represents 85 percent of storage space, as measured via Caltrans Earth, 2017.
[c] The 95th percentile queue is the maximum back of queue with 95th percentile traffic volumes. An average vehicle length of 25 feet (including vehicle separation) was assumed for analysis purposes. A minimum of 25 feet (i.e., one vehicle) was reported for queues of less than 25 feet.

12.0 SUPPLEMENTAL REVIEW OF ESCONDIDO AVENUE AT ULTIMATE CONFIGURATION

As noted previously, based on information provided by City of Hesperia staff, a future raised median island is planned for Escondido Avenue as part of the ultimate cross section configuration. A two-way left-turn lane is currently provided on Escondido Avenue and a striped northbound left-turn lane will be provided at the Escondido Avenue/The Marketplace intersection as part of the proposed project.

When the future raised median island is constructed on Escondido Avenue in the proximity of southerly project driveway, the raised median island would prohibit northbound left-turn entry into the site from Escondido Avenue and eastbound left-turn exit from the site at this location. As such, the southerly project driveway will be limited to right-turn ingress and right-turn egress traffic movements only in the future. In addition, patrons coming from the south will need to utilize the newly modified Escondido Avenue/The Marketplace-Project Driveway intersection to access the project site via a left-turn at the signal. The project trip distribution pattern for this future scenario has been updated to account for the change in the site access and circulation scheme for the project. The modified project traffic distribution percentages during the AM and PM peak hours at the study intersections are illustrated in ***Figure 12-1.***

A supplemental review has been conducted in order to account for the future access modification at the southerly project driveway (i.e., the prohibition of left-turn ingress and left-turn egress traffic movements). The previously discussed capacity analysis procedures were utilized to evaluate the future *v/c* relationships and service level characteristics at the Escondido Avenue/The Marketplace-Project Driveway intersection. The Escondido Avenue/The Marketplace-Project Driveway intersection is forecast to continue to operate at LOS D or better during the weekday AM and PM peak hours:

- Int. No. 8: Escondido Ave/The Marketplace-Project Driveway
    - AM Peak Hour: Delay = 15.9 sec., LOS B
    - PM Peak Hour: Delay = 39.5 sec., LOS D

Based on this review, it is concluded that no additional significant traffic impacts are forecast with the future construction of the raised median island ultimately planned for Escondido Avenue. In addition, a vehicle queue of between one and two vehicles per signal cycle is anticipated at the northbound left-turn lane at the Escondido Avenue/The Marketplace intersection. The HCM data worksheets for the Escondido Avenue/The Marketplace intersection are provided in ***Appendix D***.

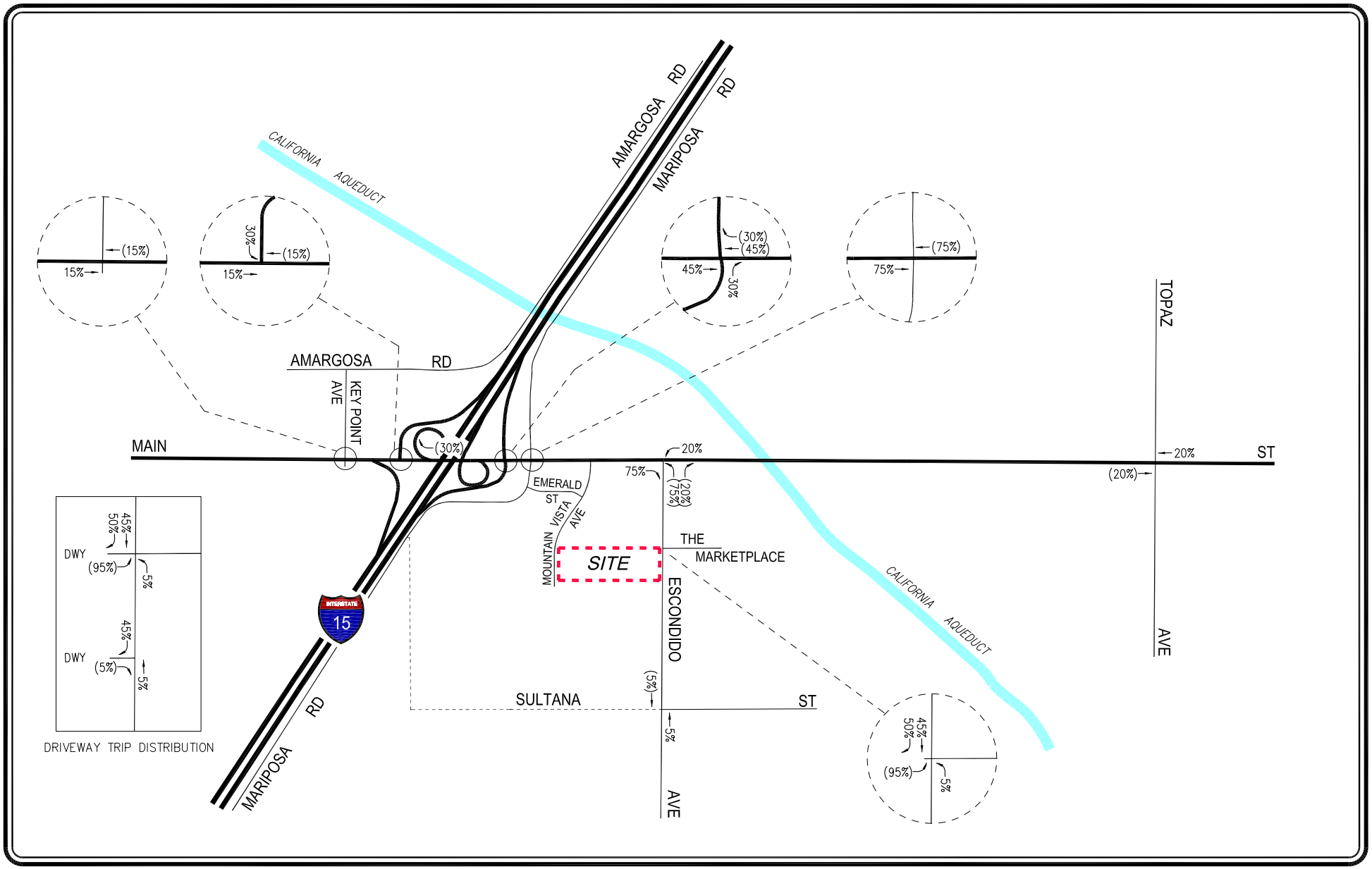

N

NOT TO SCALE

XX = INBOUND PERCENTAGE
(XX) = OUTBOUND PERCENTAGE

FIGURE 12-1
PROJECT TRIP DISTRIBUTION
ESCONDIDO AVENUE AT ULTIMATE CONFIGURATION

LINSCOTT, LAW & GREENSPAN, engineers

KAISER PERMANENTE HESPERIA MOB PROJECT

o:\job_file\4246\dwg\f12-1.dwg LDP 09:03:37 10/23/2018 rodriquez

13.0 CONCLUSIONS

- ***Project Description*** –The project site is located at the southwest corner of the Escondido Avenue/The Marketplace intersection in the City of Hesperia. The proposed project consists of the development of a medical office building with a total of approximately 55,000 square feet of floor area. A total of 250 parking spaces is planned to be provided on-site. The completion and occupancy of the proposed project was assumed to be by the year 2020.

- ***Vehicular Site Access*** – Vehicular access to the project site will be provided via two driveways on Escondido Avenue. The northerly project driveway will be located on the west side of Escondido Avenue, across The Marketplace driveway, and will create the west leg of the Escondido Avenue/The Marketplace intersection. The southerly project driveway is planned to be located on the west side of Escondido Avenue, at the southeast corner of the project site. Full access is planned to be provided (i.e., right-turn and left-turn ingress and egress turning movements) at the project driveways.

- ***Study Scope –*** A total of eight study intersections were selected for analysis in consultation with City of Hesperia staff in order to determine potential impacts related to the proposed project.

- ***Project Trip Generation*** – The proposed project is expected to generate 131 vehicle trips (103 inbound trips and 28 outbound trips) during the weekday AM peak hour. During the weekday PM peak hour, the proposed project is expected to generate 196 vehicle trips (55 inbound trips and 141 outbound trips). Over a 24-hour period, the proposed project is forecast to generate 1,987 daily trip ends during a typical weekday (994 inbound trips and 994 outbound trips).

- ***Related Projects*** – The City of Hesperia was consulted to obtain the list of development projects (related projects) in the area. A total of 30 related projects was identified and considered as part of the cumulative traffic analysis.

- ***Traffic Impact Analysis*** – It was determined that the proposed project would contribute to significant cumulative traffic impacts at two (2) intersections. The Kaiser Permanente Hesperia MOB project is subject to provide fair-share contributions for the necessary improvements as outlined in the Hesperia Main Street and Freeway Corridor Specific Plan document through the payment of the appropriate development impact fee. In addition, for Intersection No. 6, the recommended mitigation consists of a fair-share contribution towards a traffic signal installation at the intersection.

- ***Caltrans Traffic Impact Analysis*** – It is concluded that the proposed project is not expected to result in any traffic impacts at freeway mainline segments and ramp intersections based on the Caltrans analysis methodology. In addition, no impacts with respect to vehicle queuing at the analyzed freeway off-ramp locations are expected due to the proposed project.

- ***Supplemental Review*** - A supplemental review of the Escondido Avenue/The Marketplace-Project Driveway intersection has been conducted in order to account for the future access modification at the southerly project driveway (i.e., the prohibition of left-turn ingress and left-turn egress traffic movements) due to the planned installation of a raised median island. No additional significant traffic impacts are forecast assuming completion of this future construction.

APPENDIX A

MANUAL TRAFFIC COUNT DATA

CITY TRAFFIC COUNTERS

www.ctcounters.com

File Name : Keypointe_Main
Site Code : 00000000
Start Date : 8/24/2017
Page No : 1

Groups Printed- Unshifted

	Keypointe Ave Southbound			Main St Westbound			Keypointe Dr Northbound			Main St Eastbound			
Start Time	Left	Thru	Right	Left	Thru	Right	Left	Thru	Right	Left	Thru	Right	Int. Total
07:00 AM	29	4	1	13	126	24	0	0	10	4	158	0	369
07:15 AM	28	1	2	32	147	35	1	1	15	3	170	0	435
07:30 AM	34	2	5	30	146	33	3	0	10	10	169	1	443
07:45 AM	34	3	1	32	143	22	1	0	10	4	202	4	456
Total	125	10	9	107	562	114	5	1	45	21	699	5	1703
08:00 AM	25	7	6	43	100	19	2	3	12	9	171	4	401
08:15 AM	28	8	2	40	120	25	3	1	22	3	232	9	493
08:30 AM	35	6	5	44	162	28	0	2	24	13	180	3	502
08:45 AM	31	13	2	49	217	30	0	11	26	14	165	4	562
Total	119	34	15	176	599	102	5	17	84	39	748	20	1958
04:00 PM	60	28	2	76	180	41	9	9	50	8	174	4	641
04:15 PM	51	10	5	89	194	55	5	18	64	15	190	8	704
04:30 PM	56	17	7	73	179	57	6	21	65	7	193	12	693
04:45 PM	48	17	0	93	212	72	12	18	53	13	185	5	728
Total	215	72	14	331	765	225	32	66	232	43	742	29	2766
05:00 PM	66	21	3	68	202	53	9	16	69	9	214	6	736
05:15 PM	62	16	5	86	217	72	10	11	60	11	202	6	758
05:30 PM	76	18	5	83	211	56	12	11	68	12	188	2	742
05:45 PM	62	22	6	80	191	54	7	11	70	15	139	3	660
Total	266	77	19	317	821	235	38	49	267	47	743	17	2896
Grand Total	725	193	57	931	2747	676	80	133	628	150	2932	71	9323
Apprch %	74.4	19.8	5.8	21.4	63.1	15.5	9.5	15.8	74.7	4.8	93	2.3	
Total %	7.8	2.1	0.6	10	29.5	7.3	0.9	1.4	6.7	1.6	31.4	0.8	

CITY TRAFFIC COUNTERS

www.ctcounters.com

File Name : Keypointe_Main
Site Code : 00000000
Start Date : 8/24/2017
Page No : 2

	Keypointe Ave Southbound				Main St Westbound				Keypointe Dr Northbound				Main St Eastbound				
Start Time	Left	Thru	Right	App. Total	Left	Thru	Right	App. Total	Left	Thru	Right	App. Total	Left	Thru	Right	App. Total	Int. Total
Peak Hour Analysis From 07:00 AM to 11:45 AM - Peak 1 of 1																	
Peak Hour for Entire Intersection Begins at 08:00 AM																	
08:00 AM	25	7	**6**	38	43	100	19	162	2	3	12	17	9	171	4	184	401
08:15 AM	28	8	2	38	40	120	25	185	**3**	1	22	26	3	**232**	**9**	**244**	493
08:30 AM	**35**	6	5	**46**	44	162	28	234	0	2	24	26	13	180	3	196	502
08:45 AM	31	**13**	2	46	**49**	**217**	**30**	**296**	0	**11**	**26**	**37**	**14**	165	4	183	**562**
Total Volume	119	34	15	168	176	599	102	877	5	17	84	106	39	748	20	807	1958
% App. Total	70.8	20.2	8.9		20.1	68.3	11.6		4.7	16	79.2		4.8	92.7	2.5		
PHF	.850	.654	.625	.913	.898	.690	.850	.741	.417	.386	.808	.716	.696	.806	.556	.827	.871

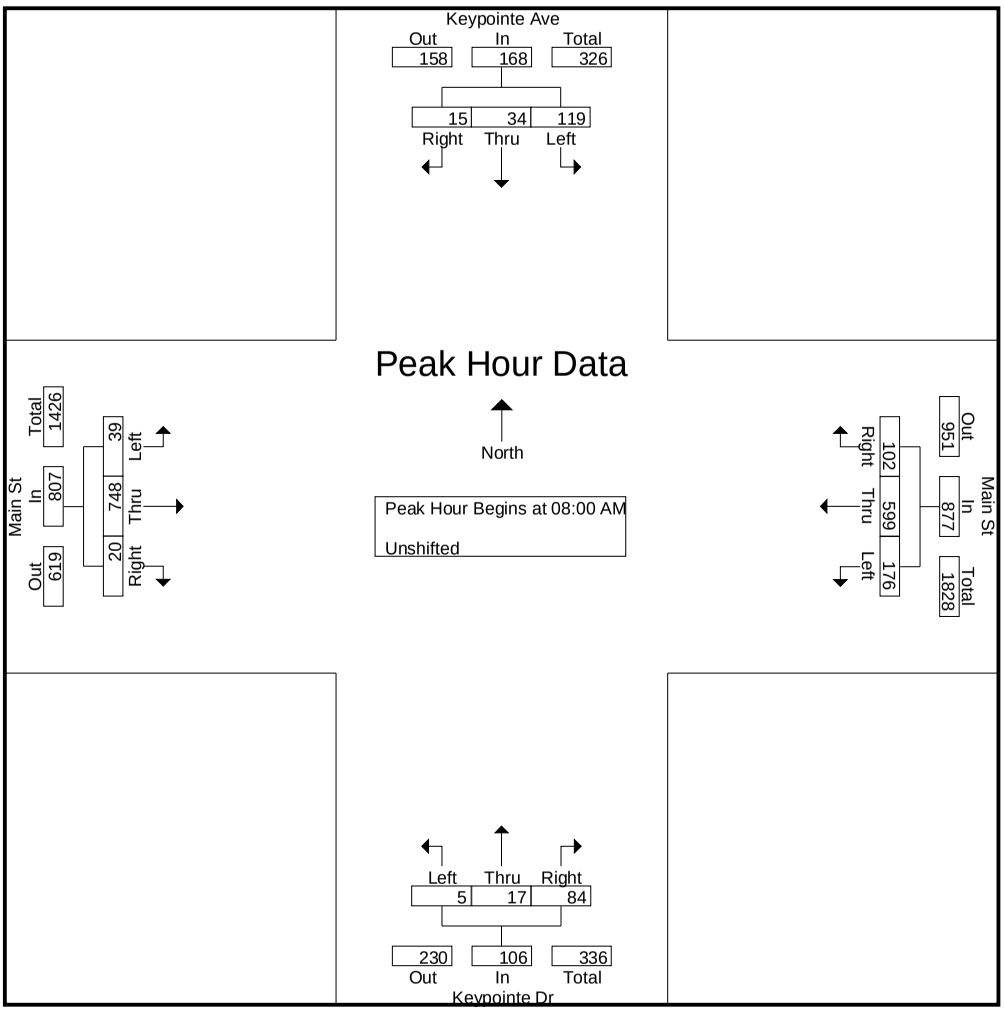

CITY TRAFFIC COUNTERS

www.ctcounters.com

File Name : Keypointe_Main
Site Code : 00000000
Start Date : 8/24/2017
Page No : 3

	Keypointe Ave Southbound				Main St Westbound				Keypointe Dr Northbound				Main St Eastbound				
Start Time	Left	Thru	Right	App. Total	Left	Thru	Right	App. Total	Left	Thru	Right	App. Total	Left	Thru	Right	App. Total	Int. Total
Peak Hour Analysis From 12:00 PM to 05:45 PM - Peak 1 of 1																	
Peak Hour for Entire Intersection Begins at 04:45 PM																	
04:45 PM	48	17	0	65	**93**	212	**72**	**377**	**12**	**18**	53	83	**13**	185	5	203	728
05:00 PM	66	**21**	3	90	68	202	53	323	9	16	**69**	**94**	9	**214**	**6**	**229**	736
05:15 PM	62	16	**5**	83	86	**217**	72	375	10	11	60	81	11	202	6	219	**758**
05:30 PM	**76**	18	5	**99**	83	211	56	350	12	11	68	91	12	188	2	202	742
Total Volume	252	72	13	337	330	842	253	1425	43	56	250	349	45	789	19	853	2964
% App. Total	74.8	21.4	3.9		23.2	59.1	17.8		12.3	16	71.6		5.3	92.5	2.2		
PHF	.829	.857	.650	.851	.887	.970	.878	.945	.896	.778	.906	.928	.865	.922	.792	.931	.978

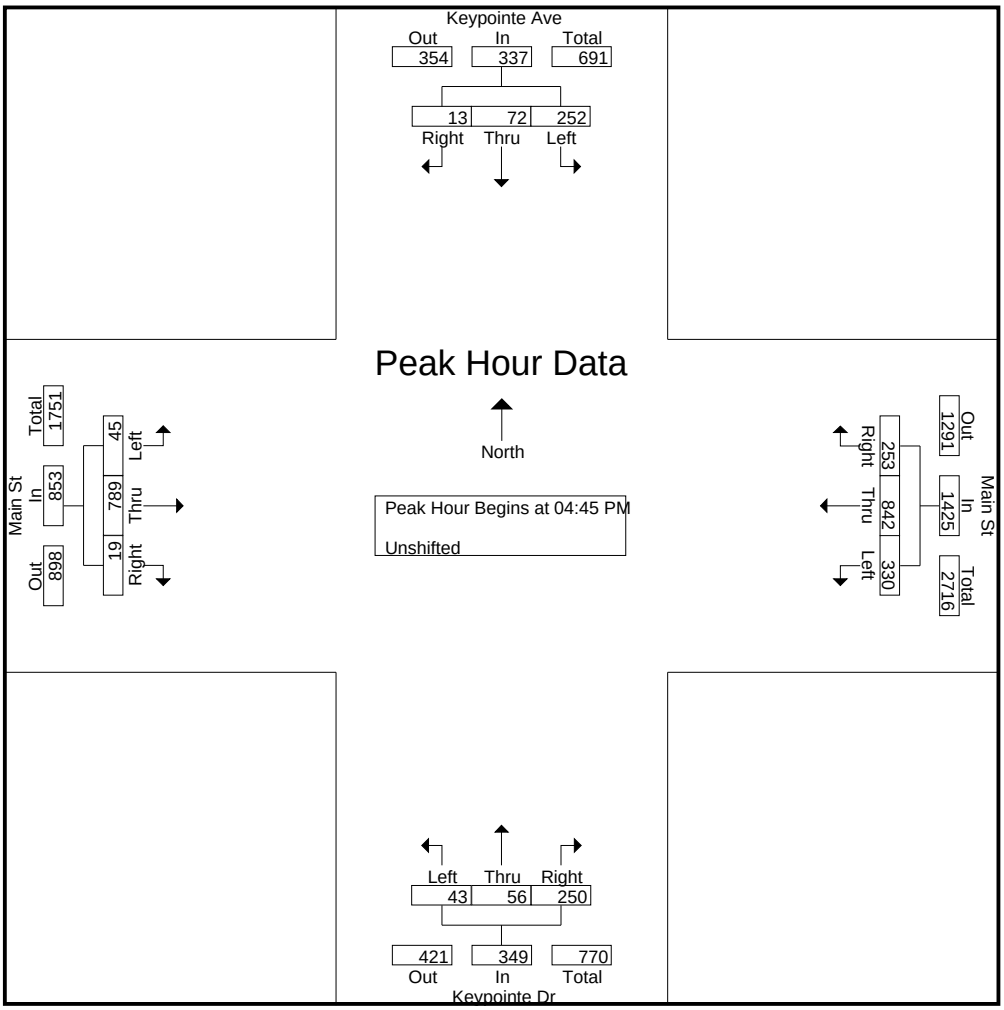

CITY TRAFFIC COUNTERS

www.ctcounters.com

File Name : I-15FrwySBOn-OffRamps_Main
Site Code : 00000000
Start Date : 8/24/2017
Page No : 1

Groups Printed- Unshifted

	I-15 Freeway SB Off/On Ramps Southbound			Main St Westbound			I-15 Freeway SB On Ramp Northbound			Main St Eastbound			
Start Time	Left	Thru	Right	Left	Thru	Right	Left	Thru	Right	Left	Thru	Right	Int. Total
07:00 AM	109	0	41	0	124	195	0	0	0	0	179	23	671
07:15 AM	72	0	29	0	184	195	0	0	0	0	201	21	702
07:30 AM	58	0	43	0	168	179	0	0	0	0	176	19	643
07:45 AM	62	0	44	0	153	136	0	0	0	0	233	22	650
Total	301	0	157	0	629	705	0	0	0	0	789	85	2666
08:00 AM	62	0	32	0	131	156	0	0	0	0	180	26	587
08:15 AM	65	0	46	0	140	152	0	0	0	0	243	28	674
08:30 AM	48	0	44	0	190	132	0	0	0	0	203	23	640
08:45 AM	58	0	42	0	254	146	0	0	0	0	210	27	737
Total	233	0	164	0	715	586	0	0	0	0	836	104	2638
04:00 PM	94	0	62	0	252	102	0	0	0	0	237	40	787
04:15 PM	93	0	60	0	279	104	0	0	0	0	278	30	844
04:30 PM	127	0	70	0	239	102	0	0	0	0	262	35	835
04:45 PM	115	0	92	0	279	105	0	0	0	0	263	26	880
Total	429	0	284	0	1049	413	0	0	0	0	1040	131	3346
05:00 PM	124	0	82	0	251	97	0	0	0	0	300	32	886
05:15 PM	120	0	90	0	294	84	0	0	0	0	275	40	903
05:30 PM	125	0	79	0	272	104	0	0	0	0	304	39	923
05:45 PM	103	0	73	0	262	89	0	0	0	0	239	29	795
Total	472	0	324	0	1079	374	0	0	0	0	1118	140	3507
Grand Total	1435	0	929	0	3472	2078	0	0	0	0	3783	460	12157
Apprch %	60.7	0	39.3	0	62.6	37.4	0	0	0	0	89.2	10.8	
Total %	11.8	0	7.6	0	28.6	17.1	0	0	0	0	31.1	3.8	

CITY TRAFFIC COUNTERS

www.ctcounters.com

File Name : I-15FrwySBOn-OffRamps_Main
Site Code : 00000000
Start Date : 8/24/2017
Page No : 2

	I-15 Freeway SB Off/On Ramps Southbound				Main St Westbound				I-15 Freeway SB On Ramp Northbound				Main St Eastbound				
Start Time	Left	Thru	Right	App. Total	Left	Thru	Right	App. Total	Left	Thru	Right	App. Total	Left	Thru	Right	App. Total	Int. Total
Peak Hour Analysis From 07:00 AM to 11:45 AM - Peak 1 of 1																	
Peak Hour for Entire Intersection Begins at 07:00 AM																	
07:00 AM	**109**	0	41	**150**	0	124	**195**	319	0	0	0	0	0	179	**23**	202	671
07:15 AM	72	0	29	101	0	**184**	195	**379**	0	0	0	0	0	201	21	222	**702**
07:30 AM	58	0	43	101	0	168	179	347	0	0	0	0	0	176	19	195	643
07:45 AM	62	0	**44**	106	0	153	136	289	0	0	0	0	0	**233**	22	**255**	650
Total Volume	301	0	157	458	0	629	705	1334	0	0	0	0	0	789	85	874	2666
% App. Total	65.7	0	34.3		0	47.2	52.8		0	0	0		0	90.3	9.7		
PHF	.690	.000	.892	.763	.000	.855	.904	.880	.000	.000	.000	.000	.000	.847	.924	.857	.949

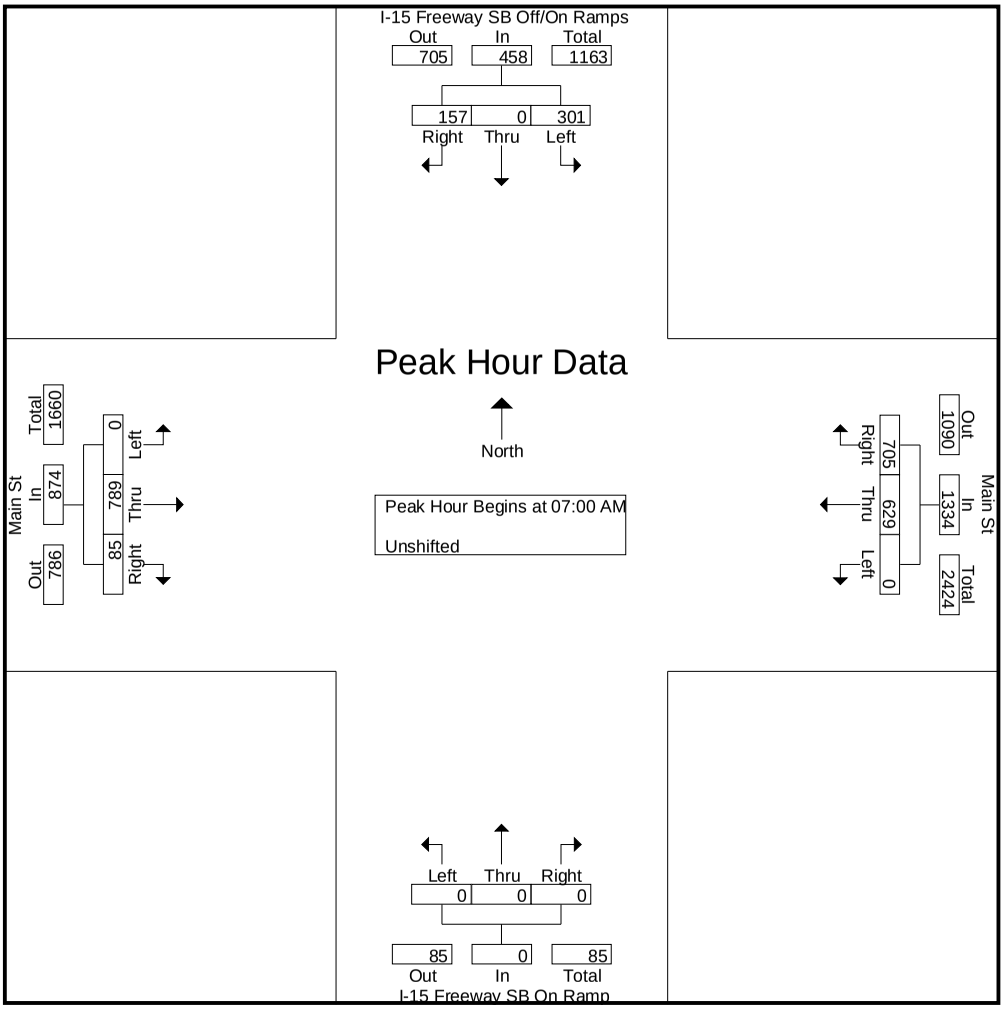

CITY TRAFFIC COUNTERS

www.ctcounters.com

File Name : I-15FrwySBOn-OffRamps_Main
Site Code : 00000000
Start Date : 8/24/2017
Page No : 3

	I-15 Freeway SB Off/On Ramps Southbound				Main St Westbound				I-15 Freeway SB On Ramp Northbound				Main St Eastbound				
Start Time	Left	Thru	Right	App. Total	Left	Thru	Right	App. Total	Left	Thru	Right	App. Total	Left	Thru	Right	App. Total	Int. Total
Peak Hour Analysis From 12:00 PM to 05:45 PM - Peak 1 of 1																	
Peak Hour for Entire Intersection Begins at 04:45 PM																	
04:45 PM	115	0	**92**	207	0	279	**105**	**384**	0	0	0	0	0	263	26	289	880
05:00 PM	124	0	82	206	0	251	97	348	0	0	0	0	0	300	32	332	886
05:15 PM	120	0	90	**210**	0	**294**	84	378	0	0	0	0	0	275	**40**	315	903
05:30 PM	**125**	0	79	204	0	272	104	376	0	0	0	0	0	**304**	39	**343**	**923**
Total Volume	484	0	343	827	0	1096	390	1486	0	0	0	0	0	1142	137	1279	3592
% App. Total	58.5	0	41.5		0	73.8	26.2		0	0	0		0	89.3	10.7		
PHF	.968	.000	.932	.985	.000	.932	.929	.967	.000	.000	.000	.000	.000	.939	.856	.932	.973

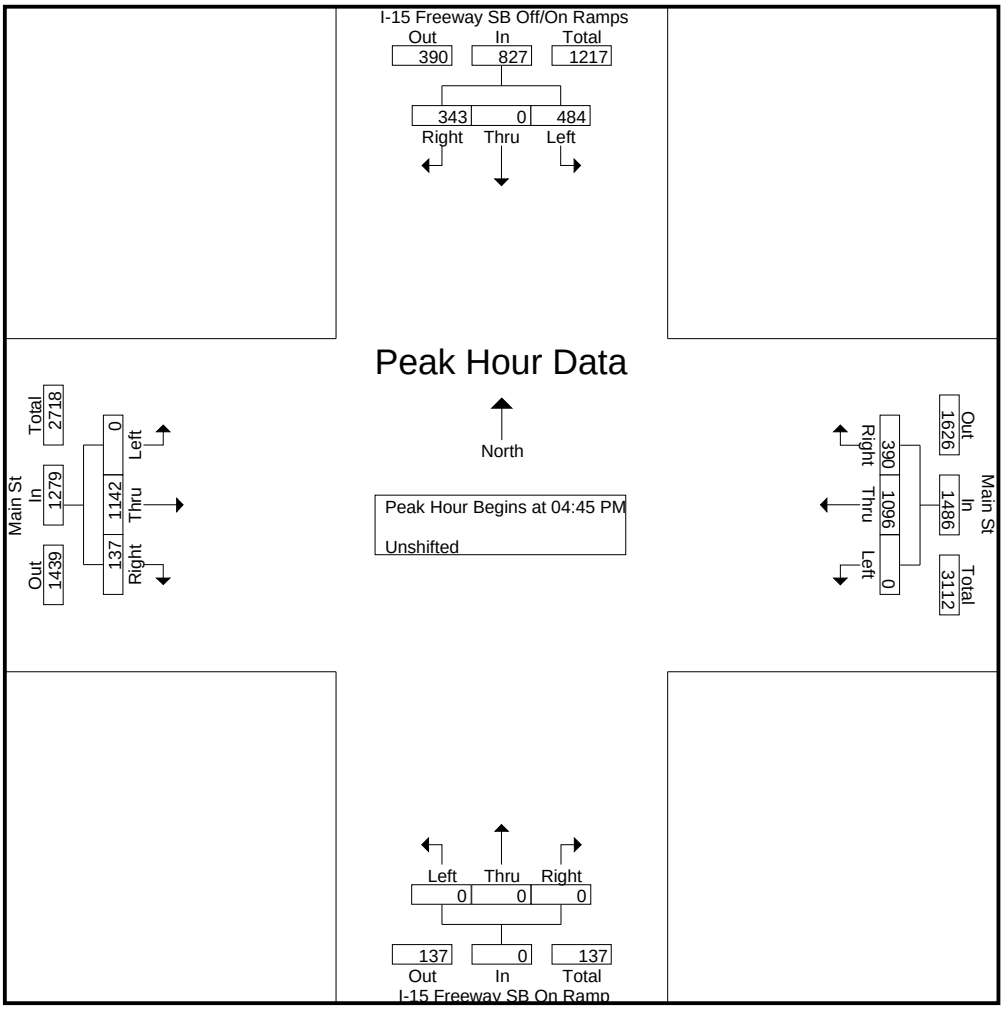

CITY TRAFFIC COUNTERS

www.ctcounters.com

File Name : I-15FrwyNBOn-OffRamps_Main
Site Code : 00000000
Start Date : 8/24/2017
Page No : 1

Groups Printed- Unshifted

	I-15 Freeway NB On-Ramp Southbound			Main St Westbound			I-15 Frwy NB On/Off Ramps Northbound			Main St Eastbound			
Start Time	Left	Thru	Right	Left	Thru	Right	Left	Thru	Right	Left	Thru	Right	Int. Total
07:00 AM	0	0	0	0	319	117	10	0	84	0	243	44	817
07:15 AM	0	0	0	0	358	121	15	0	79	0	216	65	854
07:30 AM	0	0	0	0	321	138	17	0	83	0	167	69	795
07:45 AM	0	0	0	0	265	115	14	0	82	0	213	75	764
Total	0	0	0	0	1263	491	56	0	328	0	839	253	3230
08:00 AM	0	0	0	0	273	108	14	0	71	0	198	52	716
08:15 AM	0	0	0	0	274	114	15	0	75	0	216	78	772
08:30 AM	0	0	0	0	258	88	52	2	76	0	199	59	734
08:45 AM	0	0	0	0	287	88	107	2	76	0	212	63	835
Total	0	0	0	0	1092	398	188	4	298	0	825	252	3057
04:00 PM	0	0	0	0	319	98	42	4	221	0	302	46	1032
04:15 PM	0	0	0	0	311	106	61	0	208	0	315	63	1064
04:30 PM	0	0	0	0	266	116	60	1	221	0	318	69	1051
04:45 PM	0	0	0	0	328	92	65	0	228	0	316	58	1087
Total	0	0	0	0	1224	412	228	5	878	0	1251	236	4234
05:00 PM	0	0	0	0	292	80	55	0	217	0	355	58	1057
05:15 PM	0	0	0	0	307	114	64	0	245	0	339	64	1133
05:30 PM	0	0	0	0	313	117	56	1	240	0	359	50	1136
05:45 PM	0	0	0	0	286	95	59	0	251	0	296	52	1039
Total	0	0	0	0	1198	406	234	1	953	0	1349	224	4365
Grand Total	0	0	0	0	4777	1707	706	10	2457	0	4264	965	14886
Apprch %	0	0	0	0	73.7	26.3	22.3	0.3	77.4	0	81.5	18.5	
Total %	0	0	0	0	32.1	11.5	4.7	0.1	16.5	0	28.6	6.5	

CITY TRAFFIC COUNTERS

www.ctcounters.com

File Name : I-15FrwyNBOn-OffRamps_Main
Site Code : 00000000
Start Date : 8/24/2017
Page No : 2

	I-15 Freeway NB On-Ramp Southbound				Main St Westbound				I-15 Frwy NB On/Off Ramps Northbound				Main St Eastbound				
Start Time	Left	Thru	Right	App. Total	Left	Thru	Right	App. Total	Left	Thru	Right	App. Total	Left	Thru	Right	App. Total	Int. Total
Peak Hour Analysis From 07:00 AM to 11:45 AM - Peak 1 of 1																	
Peak Hour for Entire Intersection Begins at 07:00 AM																	
07:00 AM	0	0	0	0	0	319	117	436	10	0	**84**	94	0	**243**	44	287	817
07:15 AM	0	0	0	0	0	**358**	121	**479**	15	0	79	94	0	216	65	281	**854**
07:30 AM	0	0	0	0	0	321	**138**	459	**17**	0	83	**100**	0	167	69	236	795
07:45 AM	0	0	0	0	0	265	115	380	14	0	82	96	0	213	**75**	**288**	764
Total Volume	0	0	0	0	0	1263	491	1754	56	0	328	384	0	839	253	1092	3230
% App. Total	0	0	0		0	72	28		14.6	0	85.4		0	76.8	23.2		
PHF	.000	.000	.000	.000	.000	.882	.889	.915	.824	.000	.976	.960	.000	.863	.843	.948	.946

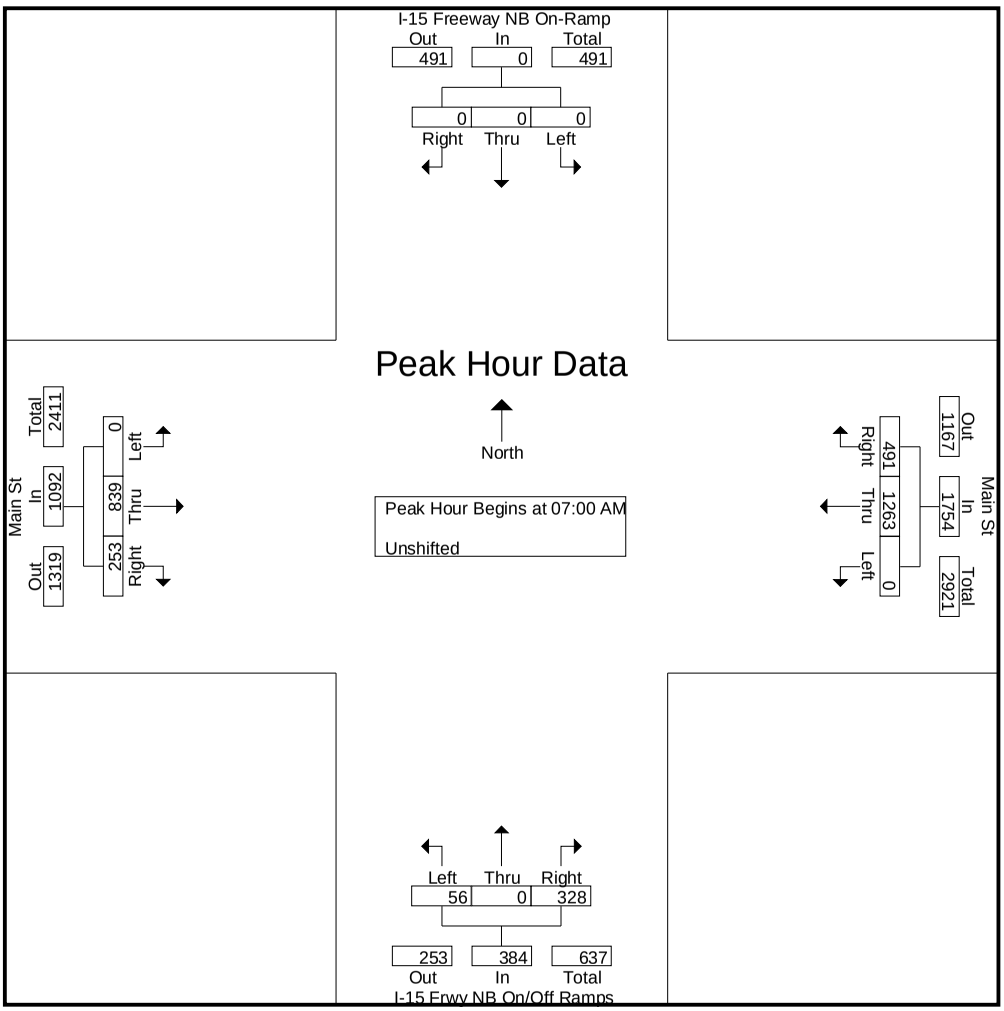

CITY TRAFFIC COUNTERS

www.ctcounters.com

File Name : I-15FrwyNBOn-OffRamps_Main
Site Code : 00000000
Start Date : 8/24/2017
Page No : 3

	I-15 Freeway NB On-Ramp Southbound				Main St Westbound				I-15 Frwy NB On/Off Ramps Northbound				Main St Eastbound				
Start Time	Left	Thru	Right	App. Total	Left	Thru	Right	App. Total	Left	Thru	Right	App. Total	Left	Thru	Right	App. Total	Int. Total
Peak Hour Analysis From 12:00 PM to 05:45 PM - Peak 1 of 1																	
Peak Hour for Entire Intersection Begins at 04:45 PM																	
04:45 PM	0	0	0	0	0	**328**	92	420	**65**	0	228	293	0	316	58	374	1087
05:00 PM	0	0	0	0	0	292	80	372	55	0	217	272	0	355	58	**413**	1057
05:15 PM	0	0	0	0	0	307	114	421	64	0	**245**	**309**	0	339	**64**	403	1133
05:30 PM	0	0	0	0	0	313	**117**	**430**	56	**1**	240	297	0	**359**	50	409	**1136**
Total Volume	0	0	0	0	0	1240	403	1643	240	1	930	1171	0	1369	230	1599	4413
% App. Total	0	0	0		0	75.5	24.5		20.5	0.1	79.4		0	85.6	14.4		
PHF	.000	.000	.000	.000	.000	.945	.861	.955	.923	.250	.949	.947	.000	.953	.898	.968	.971

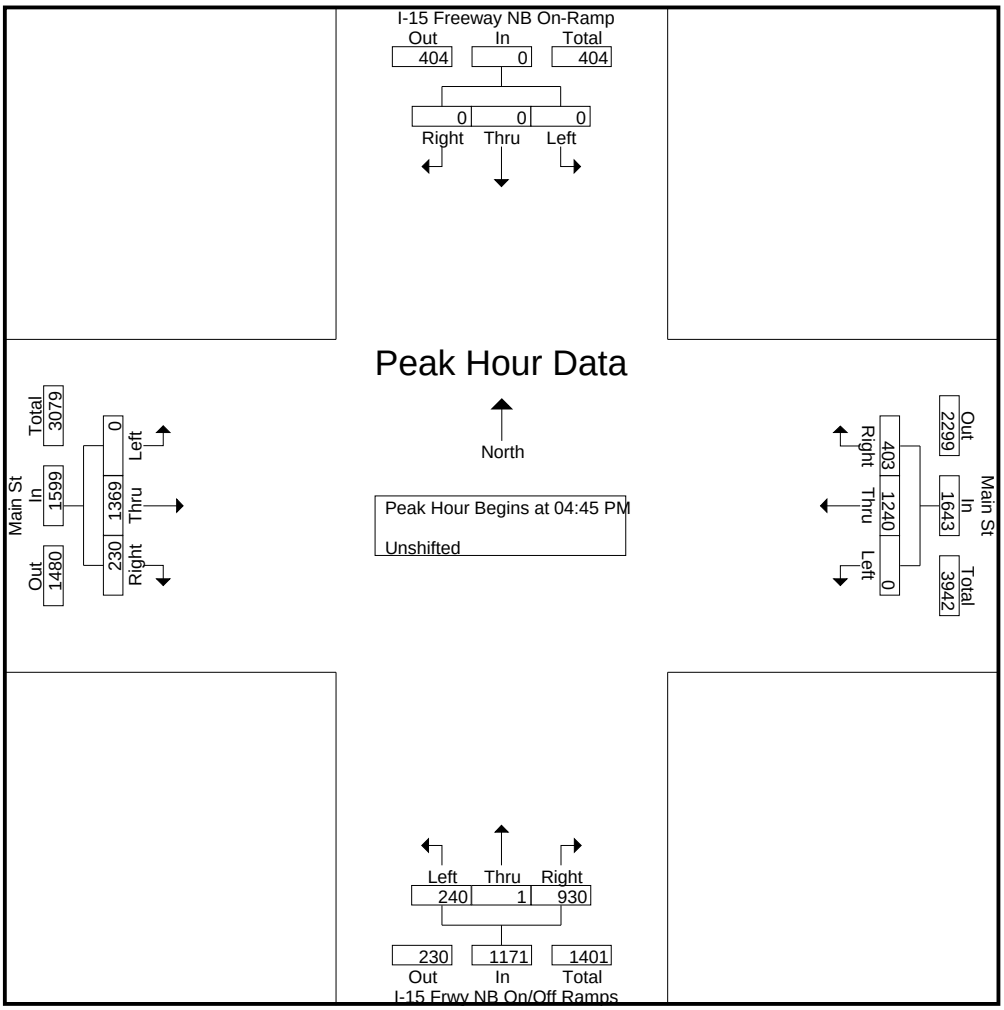

CITY TRAFFIC COUNTERS

www.ctcounters.com

File Name : Mariposa_Main
Site Code : 00000000
Start Date : 8/24/2017
Page No : 1

Groups Printed- Unshifted

	Mariposa Rd Southbound			Main St Westbound			Mariposa Rd Northbound			Main St Eastbound			
Start Time	Left	Thru	Right	Left	Thru	Right	Left	Thru	Right	Left	Thru	Right	Int. Total
07:00 AM	5	9	39	23	372	9	22	14	9	23	256	26	807
07:15 AM	11	3	44	14	396	11	16	8	11	17	247	15	793
07:30 AM	11	2	32	13	395	20	37	19	16	17	218	16	796
07:45 AM	12	5	32	15	319	11	22	8	6	25	239	16	710
Total	39	19	147	65	1482	51	97	49	42	82	960	73	3106
08:00 AM	10	3	35	12	334	13	16	3	7	26	227	13	699
08:15 AM	4	7	36	15	322	13	18	4	7	24	229	21	700
08:30 AM	11	9	19	22	296	13	21	6	7	28	217	22	671
08:45 AM	5	6	29	13	323	12	14	2	4	28	215	33	684
Total	30	25	119	62	1275	51	69	15	25	106	888	89	2754
04:00 PM	24	13	30	7	350	24	26	20	11	65	419	18	1007
04:15 PM	29	10	37	9	346	19	19	14	7	111	398	18	1017
04:30 PM	40	15	30	10	322	26	18	25	6	79	420	23	1014
04:45 PM	26	7	40	13	344	21	25	10	6	89	425	20	1026
Total	119	45	137	39	1362	90	88	69	30	344	1662	79	4064
05:00 PM	20	11	38	16	316	31	15	13	11	108	420	21	1020
05:15 PM	27	4	41	16	350	21	25	14	7	80	480	27	1092
05:30 PM	35	8	48	8	351	28	26	16	13	79	469	28	1109
05:45 PM	33	11	39	7	328	29	16	14	14	83	448	26	1048
Total	115	34	166	47	1345	109	82	57	45	350	1817	102	4269
Grand Total	303	123	569	213	5464	301	336	190	142	882	5327	343	14193
Apprch %	30.5	12.4	57.2	3.6	91.4	5	50.3	28.4	21.3	13.5	81.3	5.2	
Total %	2.1	0.9	4	1.5	38.5	2.1	2.4	1.3	1	6.2	37.5	2.4	

CITY TRAFFIC COUNTERS

www.ctcounters.com

File Name : Mariposa_Main
Site Code : 00000000
Start Date : 8/24/2017
Page No : 2

	Mariposa Rd Southbound				Main St Westbound				Mariposa Rd Northbound				Main St Eastbound				
Start Time	Left	Thru	Right	App. Total	Left	Thru	Right	App. Total	Left	Thru	Right	App. Total	Left	Thru	Right	App. Total	Int. Total
Peak Hour Analysis From 07:00 AM to 11:45 AM - Peak 1 of 1																	
Peak Hour for Entire Intersection Begins at 07:00 AM																	
07:00 AM	5	**9**	39	53	**23**	372	9	404	22	14	9	45	23	**256**	**26**	**305**	**807**
07:15 AM	11	3	**44**	**58**	14	**396**	11	421	16	8	11	35	17	247	15	279	793
07:30 AM	11	2	32	45	13	395	**20**	**428**	**37**	**19**	**16**	**72**	17	218	16	251	796
07:45 AM	**12**	5	32	49	15	319	11	345	22	8	6	36	**25**	239	16	280	710
Total Volume	39	19	147	205	65	1482	51	1598	97	49	42	188	82	960	73	1115	3106
% App. Total	19	9.3	71.7		4.1	92.7	3.2		51.6	26.1	22.3		7.4	86.1	6.5		
PHF	.813	.528	.835	.884	.707	.936	.638	.933	.655	.645	.656	.653	.820	.938	.702	.914	.962

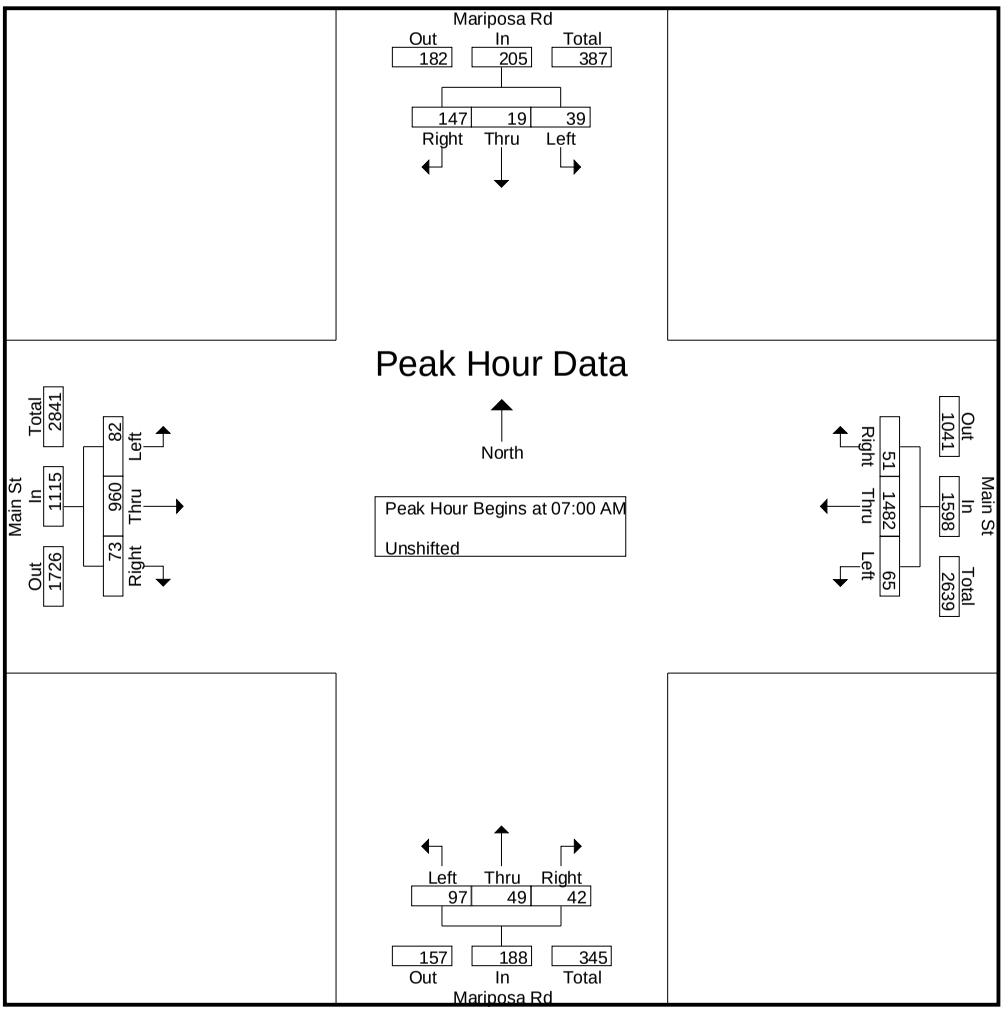

CITY TRAFFIC COUNTERS

www.ctcounters.com

File Name : Mariposa_Main
Site Code : 00000000
Start Date : 8/24/2017
Page No : 3

	Mariposa Rd Southbound				Main St Westbound				Mariposa Rd Northbound				Main St Eastbound				
Start Time	Left	Thru	Right	App. Total	Left	Thru	Right	App. Total	Left	Thru	Right	App. Total	Left	Thru	Right	App. Total	Int. Total
Peak Hour Analysis From 12:00 PM to 05:45 PM - Peak 1 of 1																	
Peak Hour for Entire Intersection Begins at 05:00 PM																	
05:00 PM	20	**11**	38	69	**16**	316	**31**	363	15	13	11	39	**108**	420	21	549	1020
05:15 PM	27	4	41	72	16	350	21	**387**	25	14	7	46	80	**480**	27	**587**	1092
05:30 PM	**35**	8	**48**	**91**	8	**351**	28	387	**26**	**16**	13	**55**	79	469	**28**	576	**1109**
05:45 PM	33	11	39	83	7	328	29	364	16	14	**14**	44	83	448	26	557	1048
Total Volume	115	34	166	315	47	1345	109	1501	82	57	45	184	350	1817	102	2269	4269
% App. Total	36.5	10.8	52.7		3.1	89.6	7.3		44.6	31	24.5		15.4	80.1	4.5		
PHF	.821	.773	.865	.865	.734	.958	.879	.970	.788	.891	.804	.836	.810	.946	.911	.966	.962

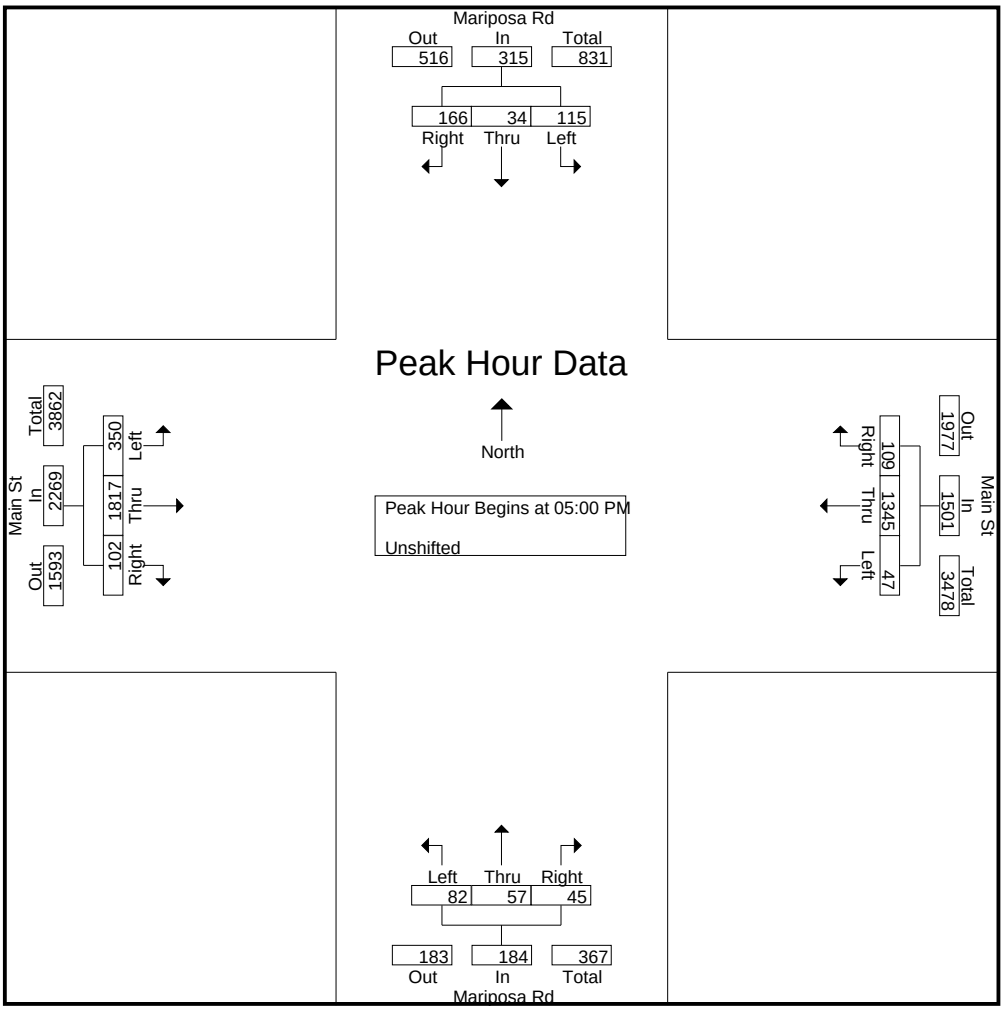

Counts Unlimited
PO Box 1178
Corona, CA 92878
(951) 268-6268

City of Hesperia
N/S: Escondido Avenue
E/W: Main Street
Weather: Clear

File Name : HES_Escondido_Main AM
Site Code : 0571838
Start Date : 5/10/2018
Page No : 1

Groups Printed- Total Volume

	Escondido Avenue Southbound				Main Street Westbound				Escondido Avenue Northbound				Main Street Eastbound				
Start Time	Left	Thru	Right	App. Total	Left	Thru	Right	App. Total	Left	Thru	Right	App. Total	Left	Thru	Right	App. Total	Int. Total
07:00 AM	0	0	1	1	78	203	0	281	132	0	91	223	1	181	104	286	791
07:15 AM	0	0	0	0	102	202	0	304	161	1	98	260	0	195	128	323	887
07:30 AM	0	2	5	7	48	217	2	267	174	6	95	275	1	225	96	322	871
07:45 AM	1	1	3	5	62	170	0	232	165	3	77	245	3	207	75	285	767
Total	1	3	9	13	290	792	2	1084	632	10	361	1003	5	808	403	1216	3316
08:00 AM	2	2	0	4	67	179	1	247	117	2	64	183	3	190	98	291	725
08:15 AM	1	2	5	8	89	209	1	299	154	3	84	241	5	203	92	300	848
08:30 AM	2	3	4	9	73	185	1	259	165	2	57	224	9	198	86	293	785
08:45 AM	1	0	3	4	68	179	1	248	125	4	42	171	5	185	83	273	696
Total	6	7	12	25	297	752	4	1053	561	11	247	819	22	776	359	1157	3054
Grand Total	7	10	21	38	587	1544	6	2137	1193	21	608	1822	27	1584	762	2373	6370
Apprch %	18.4	26.3	55.3		27.5	72.3	0.3		65.5	1.2	33.4		1.1	66.8	32.1		
Total %	0.1	0.2	0.3	0.6	9.2	24.2	0.1	33.5	18.7	0.3	9.5	28.6	0.4	24.9	12	37.3	

	Escondido Avenue Southbound				Main Street Westbound				Escondido Avenue Northbound				Main Street Eastbound				
Start Time	Left	Thru	Right	App. Total	Left	Thru	Right	App. Total	Left	Thru	Right	App. Total	Left	Thru	Right	App. Total	Int. Total
Peak Hour Analysis From 07:00 AM to 08:45 AM - Peak 1 of 1																	
Peak Hour for Entire Intersection Begins at 07:00 AM																	
07:00 AM	0	0	1	1	78	203	0	281	132	0	91	223	1	181	104	286	791
07:15 AM	0	0	0	0	**102**	202	0	**304**	161	1	**98**	260	0	195	**128**	**323**	**887**
07:30 AM	0	**2**	**5**	**7**	48	**217**	**2**	267	**174**	**6**	95	**275**	1	**225**	96	322	871
07:45 AM	**1**	1	3	5	62	170	0	232	165	3	77	245	**3**	207	75	285	767
Total Volume	1	3	9	13	290	792	2	1084	632	10	361	1003	5	808	403	1216	3316
% App. Total	7.7	23.1	69.2		26.8	73.1	0.2		63	1	36		0.4	66.4	33.1		
PHF	.250	.375	.450	.464	.711	.912	.250	.891	.908	.417	.921	.912	.417	.898	.787	.941	.935

Counts Unlimited
PO Box 1178
Corona, CA 92878
(951) 268-6268

City of Hesperia
N/S: Escondido Avenue
E/W: Main Street
Weather: Clear

File Name : HES_Escondido_Main AM
Site Code : 0571838
Start Date : 5/10/2018
Page No : 2

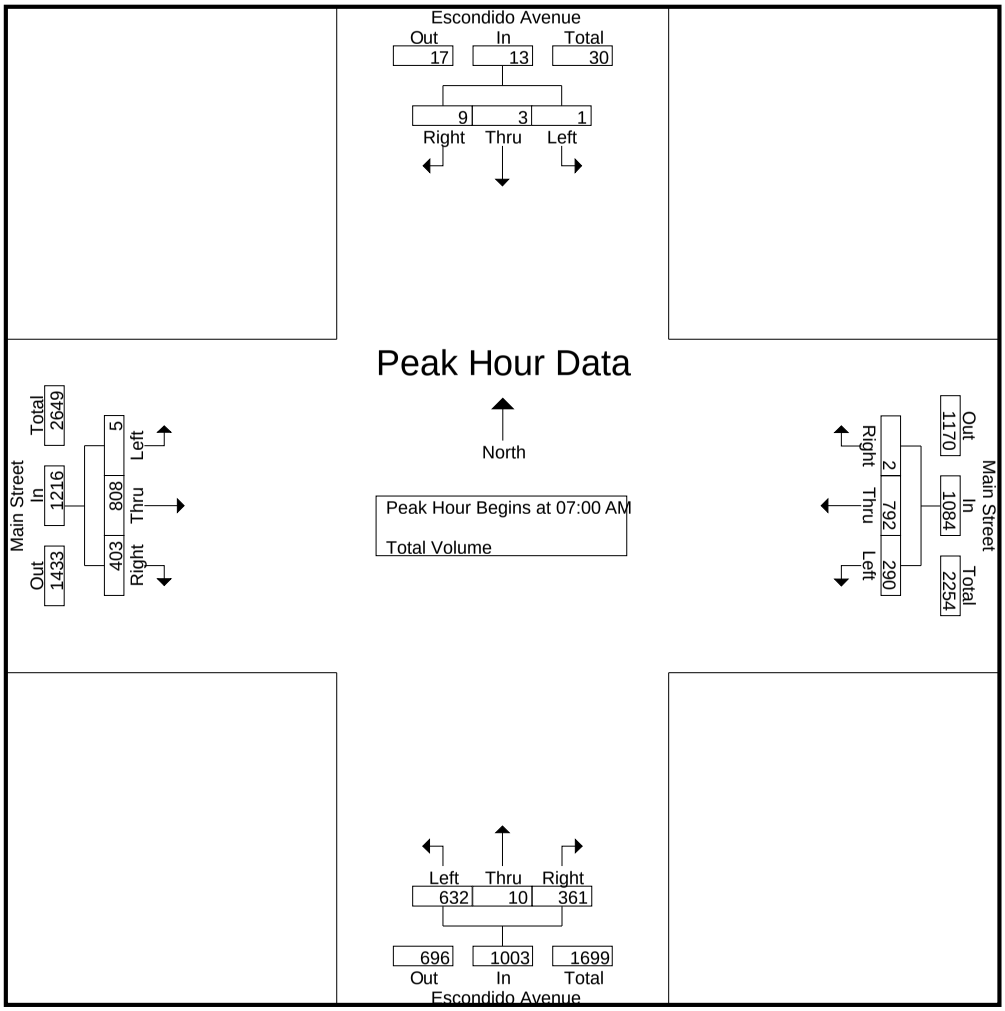

Peak Hour Analysis From 07:00 AM to 08:45 AM - Peak 1 of 1
Peak Hour for Each Approach Begins at:

	07:45 AM				07:00 AM				07:00 AM				07:15 AM			
+0 mins.	1	1	3	5	78	203	0	281	132	0	91	223	0	195	**128**	**323**
+15 mins.	**2**	2	0	4	**102**	202	0	**304**	161	1	**98**	260	1	**225**	96	322
+30 mins.	1	2	**5**	8	48	**217**	**2**	267	**174**	**6**	95	**275**	**3**	207	75	285
+45 mins.	2	**3**	4	**9**	62	170	0	232	165	3	77	245	3	190	98	291
Total Volume	6	8	12	26	290	792	2	1084	632	10	361	1003	7	817	397	1221
% App. Total	23.1	30.8	46.2		26.8	73.1	0.2		63	1	36		0.6	66.9	32.5	
PHF	.750	.667	.600	.722	.711	.912	.250	.891	.908	.417	.921	.912	.583	.908	.775	.945

Counts Unlimited
PO Box 1178
Corona, CA 92878
(951) 268-6268

City of Hesperia
N/S: Escondido Avenue
E/W: Main Street
Weather: Clear

File Name : HES_Escondido_Main PM
Site Code : 0571838
Start Date : 5/10/2018
Page No : 1

Groups Printed- Total Volume

	Escondido Avenue Southbound				Main Street Westbound				Escondido Avenue Northbound				Main Street Eastbound				
Start Time	Left	Thru	Right	App. Total	Left	Thru	Right	App. Total	Left	Thru	Right	App. Total	Left	Thru	Right	App. Total	Int. Total
04:00 PM	16	7	16	39	97	205	3	305	143	12	47	202	14	273	124	411	957
04:15 PM	9	5	24	38	93	264	3	360	142	11	48	201	12	371	162	545	1144
04:30 PM	6	12	11	29	96	240	0	336	142	13	53	208	18	348	164	530	1103
04:45 PM	19	12	9	40	80	192	1	273	158	10	58	226	12	292	146	450	989
Total	50	36	60	146	366	901	7	1274	585	46	206	837	56	1284	596	1936	4193
05:00 PM	12	7	12	31	95	248	3	346	141	6	49	196	14	337	170	521	1094
05:15 PM	11	8	11	30	103	217	5	325	157	16	52	225	11	344	172	527	1107
05:30 PM	17	10	12	39	105	211	0	316	153	16	55	224	12	340	166	518	1097
05:45 PM	12	7	16	35	110	201	2	313	145	11	45	201	8	313	133	454	1003
Total	52	32	51	135	413	877	10	1300	596	49	201	846	45	1334	641	2020	4301
Grand Total	102	68	111	281	779	1778	17	2574	1181	95	407	1683	101	2618	1237	3956	8494
Apprch %	36.3	24.2	39.5		30.3	69.1	0.7		70.2	5.6	24.2		2.6	66.2	31.3		
Total %	1.2	0.8	1.3	3.3	9.2	20.9	0.2	30.3	13.9	1.1	4.8	19.8	1.2	30.8	14.6	46.6	

	Escondido Avenue Southbound				Main Street Westbound				Escondido Avenue Northbound				Main Street Eastbound				
Start Time	Left	Thru	Right	App. Total	Left	Thru	Right	App. Total	Left	Thru	Right	App. Total	Left	Thru	Right	App. Total	Int. Total
Peak Hour Analysis From 04:00 PM to 05:45 PM - Peak 1 of 1																	
Peak Hour for Entire Intersection Begins at 04:15 PM																	
04:15 PM	9	5	**24**	38	93	**264**	**3**	**360**	142	11	48	201	12	**371**	162	**545**	**1144**
04:30 PM	6	**12**	11	29	**96**	240	0	336	142	**13**	53	208	**18**	348	164	530	1103
04:45 PM	**19**	12	9	**40**	80	192	1	273	**158**	10	**58**	**226**	12	292	146	450	989
05:00 PM	12	7	12	31	95	248	3	346	141	6	49	196	14	337	**170**	521	1094
Total Volume	46	36	56	138	364	944	7	1315	583	40	208	831	56	1348	642	2046	4330
% App. Total	33.3	26.1	40.6		27.7	71.8	0.5		70.2	4.8	25		2.7	65.9	31.4		
PHF	.605	.750	.583	.863	.948	.894	.583	.913	.922	.769	.897	.919	.778	.908	.944	.939	.946

Counts Unlimited
PO Box 1178
Corona, CA 92878
(951) 268-6268

City of Hesperia
N/S: Escondido Avenue
E/W: Main Street
Weather: Clear

File Name : HES_Escondido_Main PM
Site Code : 0571838
Start Date : 5/10/2018
Page No : 2

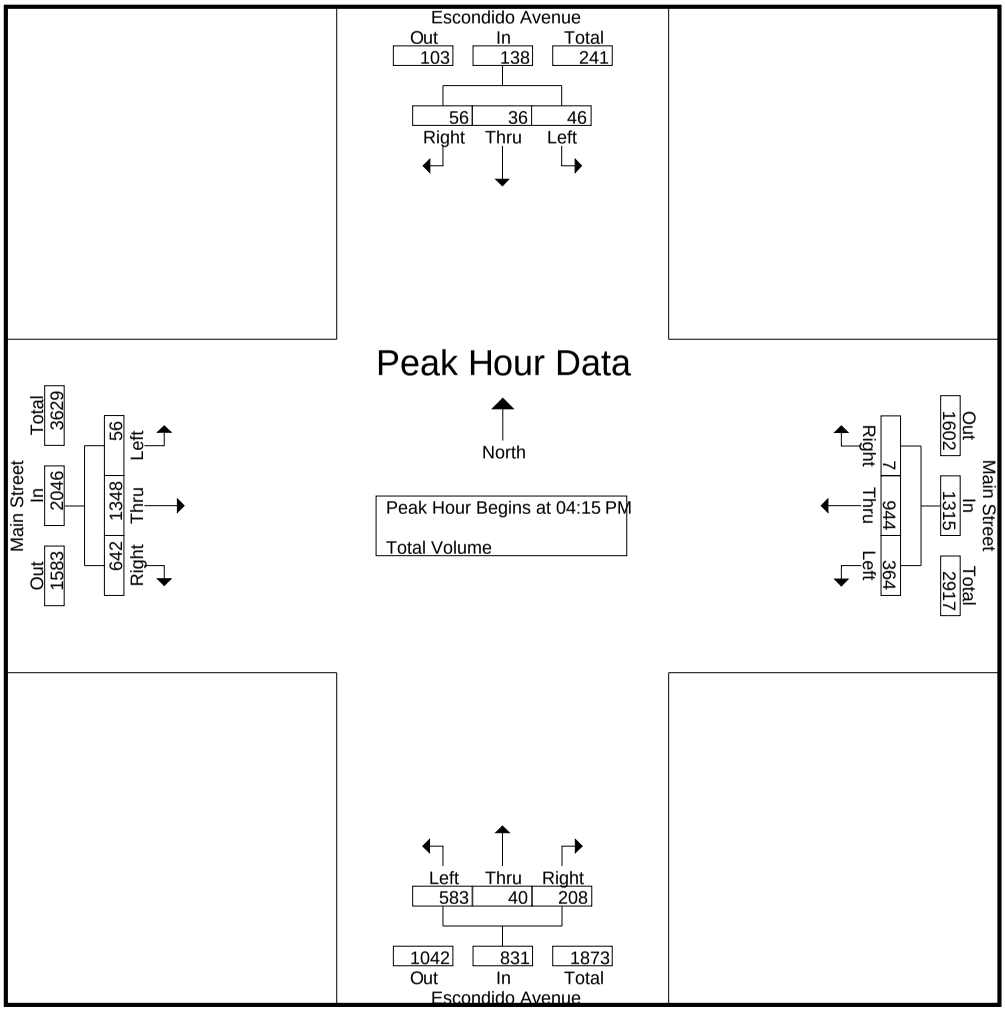

Peak Hour Analysis From 04:00 PM to 05:45 PM - Peak 1 of 1
Peak Hour for Each Approach Begins at:

	04:00 PM				04:15 PM				04:45 PM				04:15 PM			
+0 mins.	16	7	16	39	93	**264**	**3**	**360**	**158**	10	**58**	**226**	12	**371**	162	**545**
+15 mins.	9	5	**24**	38	**96**	240	0	336	141	6	49	196	**18**	348	164	530
+30 mins.	6	**12**	11	29	80	192	1	273	157	**16**	52	225	12	292	146	450
+45 mins.	**19**	12	9	**40**	95	248	3	346	153	16	55	224	14	337	**170**	521
Total Volume	50	36	60	146	364	944	7	1315	609	48	214	871	56	1348	642	2046
% App. Total	34.2	24.7	41.1		27.7	71.8	0.5		69.9	5.5	24.6		2.7	65.9	31.4	
PHF	.658	.750	.625	.913	.948	.894	.583	.913	.964	.750	.922	.963	.778	.908	.944	.939

CITY TRAFFIC COUNTERS

www.ctcounters.com

File Name : Escondido_Sultana
Site Code : 00000000
Start Date : 8/24/2017
Page No : 1

Groups Printed- Unshifted

	Escondido Ave Southbound			Sultana St Westbound			Escondido Ave Northbound			Sultana St Eastbound			
Start Time	Left	Thru	Right	Left	Thru	Right	Left	Thru	Right	Left	Thru	Right	Int. Total
07:00 AM	17	170	0	16	0	56	0	189	7	0	0	0	455
07:15 AM	20	169	0	13	0	36	0	261	9	0	0	0	508
07:30 AM	24	113	0	1	0	39	0	274	13	0	0	0	464
07:45 AM	14	108	0	3	0	47	0	170	2	0	0	0	344
Total	75	560	0	33	0	178	0	894	31	0	0	0	1771
08:00 AM	21	120	0	1	0	32	0	179	5	0	0	0	358
08:15 AM	26	92	0	5	0	33	0	168	4	0	0	0	328
08:30 AM	17	71	0	1	0	40	0	110	1	0	0	0	240
08:45 AM	16	52	0	0	0	30	0	95	0	0	0	0	193
Total	80	335	0	7	0	135	0	552	10	0	0	0	1119
04:00 PM	44	150	0	2	0	27	0	139	3	0	0	0	365
04:15 PM	55	160	0	3	0	27	0	121	6	0	0	0	372
04:30 PM	42	179	0	2	0	31	0	133	2	0	0	0	389
04:45 PM	42	189	0	6	0	42	0	101	4	0	0	0	384
Total	183	678	0	13	0	127	0	494	15	0	0	0	1510
05:00 PM	57	176	0	4	0	36	0	128	3	0	0	0	404
05:15 PM	58	197	0	1	0	38	0	160	4	0	0	0	458
05:30 PM	53	154	0	4	0	38	0	160	3	0	0	0	412
05:45 PM	50	190	0	5	0	34	0	144	1	0	0	0	424
Total	218	717	0	14	0	146	0	592	11	0	0	0	1698
Grand Total	556	2290	0	67	0	586	0	2532	67	0	0	0	6098
Apprch %	19.5	80.5	0	10.3	0	89.7	0	97.4	2.6	0	0	0	
Total %	9.1	37.6	0	1.1	0	9.6	0	41.5	1.1	0	0	0	

CITY TRAFFIC COUNTERS

www.ctcounters.com

File Name : Escondido_Sultana
Site Code : 00000000
Start Date : 8/24/2017
Page No : 2

	Escondido Ave Southbound				Sultana St Westbound				Escondido Ave Northbound				Sultana St Eastbound				
Start Time	Left	Thru	Right	App. Total	Left	Thru	Right	App. Total	Left	Thru	Right	App. Total	Left	Thru	Right	App. Total	Int. Total
Peak Hour Analysis From 07:00 AM to 11:45 AM - Peak 1 of 1																	
Peak Hour for Entire Intersection Begins at 07:00 AM																	
07:00 AM	17	**170**	0	187	**16**	0	**56**	**72**	0	189	7	196	0	0	0	0	455
07:15 AM	20	169	0	**189**	13	0	36	49	0	261	9	270	0	0	0	0	**508**
07:30 AM	**24**	113	0	137	1	0	39	40	0	**274**	**13**	**287**	0	0	0	0	464
07:45 AM	14	108	0	122	3	0	47	50	0	170	2	172	0	0	0	0	344
Total Volume	75	560	0	635	33	0	178	211	0	894	31	925	0	0	0	0	1771
% App. Total	11.8	88.2	0		15.6	0	84.4		0	96.6	3.4		0	0	0		
PHF	.781	.824	.000	.840	.516	.000	.795	.733	.000	.816	.596	.806	.000	.000	.000	.000	.872

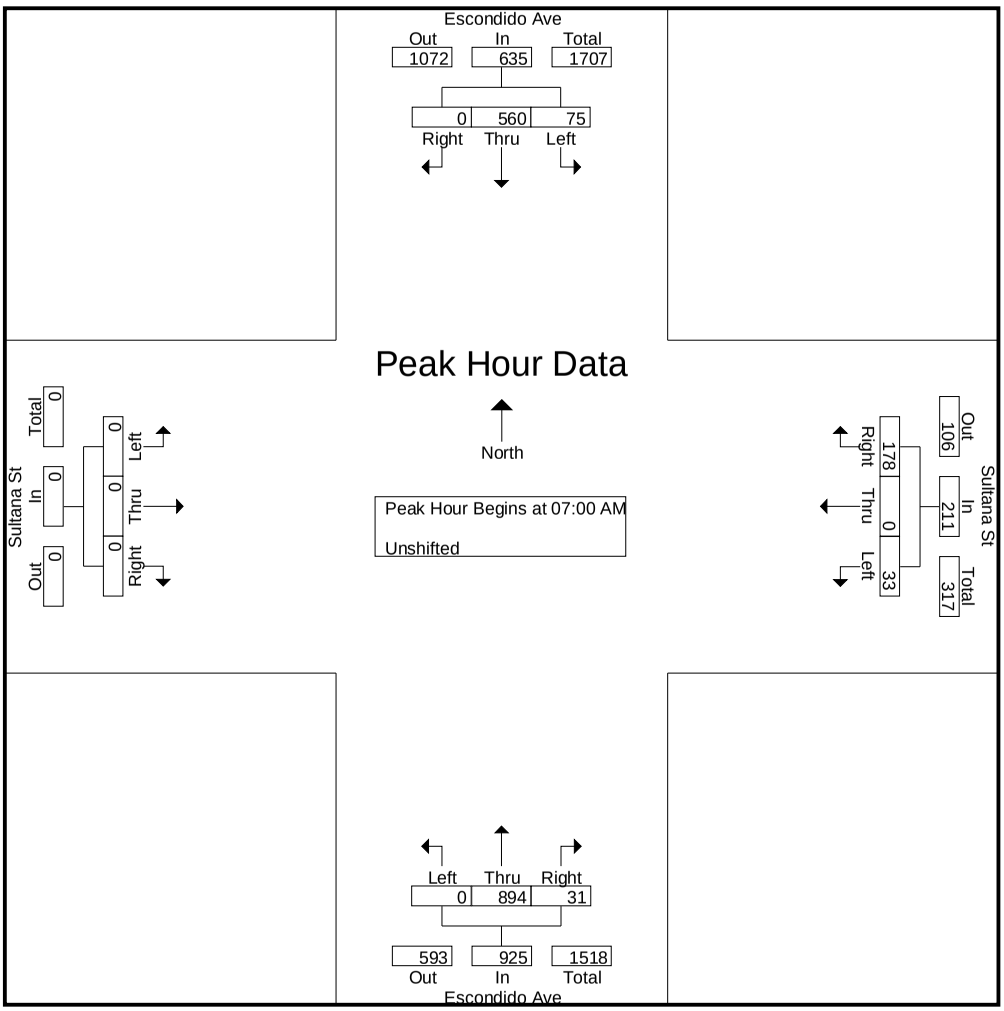

CITY TRAFFIC COUNTERS

www.ctcounters.com

File Name : Escondido_Sultana
Site Code : 00000000
Start Date : 8/24/2017
Page No : 3

	Escondido Ave Southbound				Sultana St Westbound				Escondido Ave Northbound				Sultana St Eastbound				
Start Time	Left	Thru	Right	App. Total	Left	Thru	Right	App. Total	Left	Thru	Right	App. Total	Left	Thru	Right	App. Total	Int. Total
Peak Hour Analysis From 12:00 PM to 05:45 PM - Peak 1 of 1																	
Peak Hour for Entire Intersection Begins at 05:00 PM																	
05:00 PM	57	176	0	233	4	0	36	40	0	128	3	131	0	0	0	0	404
05:15 PM	**58**	**197**	0	**255**	1	0	**38**	39	0	**160**	**4**	**164**	0	0	0	0	**458**
05:30 PM	53	154	0	207	4	0	38	**42**	0	160	3	163	0	0	0	0	412
05:45 PM	50	190	0	240	**5**	0	34	39	0	144	1	145	0	0	0	0	424
Total Volume	218	717	0	935	14	0	146	160	0	592	11	603	0	0	0	0	1698
% App. Total	23.3	76.7	0		8.8	0	91.2		0	98.2	1.8		0	0	0		
PHF	.940	.910	.000	.917	.700	.000	.961	.952	.000	.925	.688	.919	.000	.000	.000	.000	.927

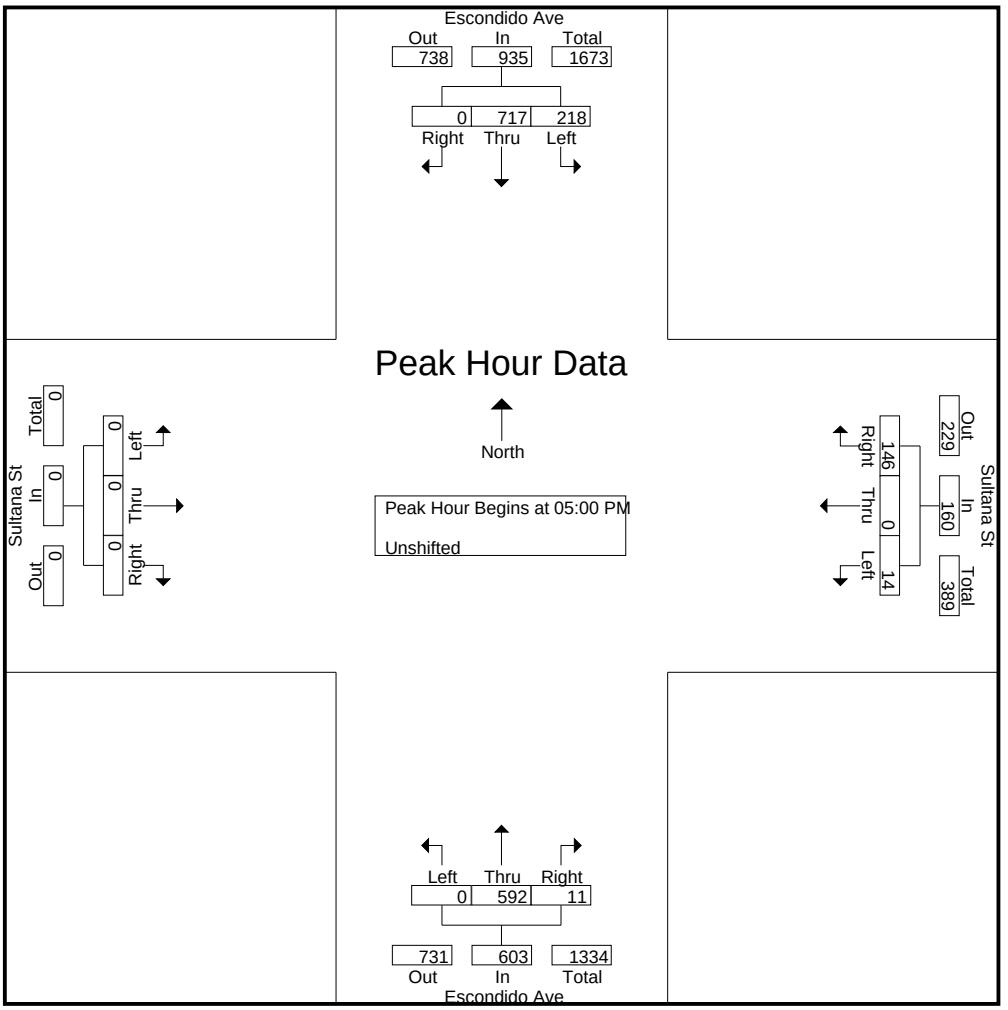

CITY TRAFFIC COUNTERS

www.ctcounters.com

File Name : Topaz_Main
Site Code : 00000000
Start Date : 8/24/2017
Page No : 1

Groups Printed- Unshifted

	Topaz Ave Southbound			Main St Westbound			Topaz Ave Northbound			Main St Eastbound			
Start Time	Left	Thru	Right	Left	Thru	Right	Left	Thru	Right	Left	Thru	Right	Int. Total
07:00 AM	23	16	24	3	267	27	58	30	11	23	210	30	722
07:15 AM	39	23	24	9	294	34	44	40	6	17	245	20	795
07:30 AM	24	17	24	8	234	16	54	7	9	10	234	29	666
07:45 AM	12	7	7	6	172	7	38	3	19	10	247	22	550
Total	98	63	79	26	967	84	194	80	45	60	936	101	2733
08:00 AM	9	6	16	7	255	3	27	5	16	9	195	20	568
08:15 AM	12	10	9	7	234	15	38	4	13	13	161	24	540
08:30 AM	11	13	9	10	238	4	29	8	11	5	178	15	531
08:45 AM	21	9	12	7	212	4	41	3	17	11	231	27	595
Total	53	38	46	31	939	26	135	20	57	38	765	86	2234
04:00 PM	7	6	9	16	301	11	39	9	18	9	329	40	794
04:15 PM	10	8	11	20	280	18	39	10	21	13	337	41	808
04:30 PM	14	10	12	22	286	10	47	5	21	14	324	51	816
04:45 PM	8	5	10	19	272	11	40	7	15	14	322	55	778
Total	39	29	42	77	1139	50	165	31	75	50	1312	187	3196
05:00 PM	11	15	12	25	294	13	39	9	19	15	337	53	842
05:15 PM	16	8	10	21	266	11	43	5	21	8	392	73	874
05:30 PM	21	19	14	18	254	14	38	6	19	15	306	66	790
05:45 PM	6	6	13	24	291	15	39	9	21	18	336	77	855
Total	54	48	49	88	1105	53	159	29	80	56	1371	269	3361
Grand Total	244	178	216	222	4150	213	653	160	257	204	4384	643	11524
Apprch %	38.2	27.9	33.9	4.8	90.5	4.6	61	15	24	3.9	83.8	12.3	
Total %	2.1	1.5	1.9	1.9	36	1.8	5.7	1.4	2.2	1.8	38	5.6	

CITY TRAFFIC COUNTERS

www.ctcounters.com

File Name : Topaz_Main
Site Code : 00000000
Start Date : 8/24/2017
Page No : 2

	Topaz Ave Southbound				Main St Westbound				Topaz Ave Northbound				Main St Eastbound				
Start Time	Left	Thru	Right	App. Total	Left	Thru	Right	App. Total	Left	Thru	Right	App. Total	Left	Thru	Right	App. Total	Int. Total
Peak Hour Analysis From 07:00 AM to 11:45 AM - Peak 1 of 1																	
Peak Hour for Entire Intersection Begins at 07:00 AM																	
07:00 AM	23	16	**24**	63	3	267	27	297	**58**	30	11	**99**	**23**	210	**30**	263	722
07:15 AM	**39**	**23**	24	**86**	**9**	**294**	**34**	**337**	44	**40**	6	90	17	245	20	**282**	**795**
07:30 AM	24	17	24	65	8	234	16	258	54	7	9	70	10	234	29	273	666
07:45 AM	12	7	7	26	6	172	7	185	38	3	**19**	60	10	**247**	22	279	550
Total Volume	98	63	79	240	26	967	84	1077	194	80	45	319	60	936	101	1097	2733
% App. Total	40.8	26.2	32.9		2.4	89.8	7.8		60.8	25.1	14.1		5.5	85.3	9.2		
PHF	.628	.685	.823	.698	.722	.822	.618	.799	.836	.500	.592	.806	.652	.947	.842	.973	.859

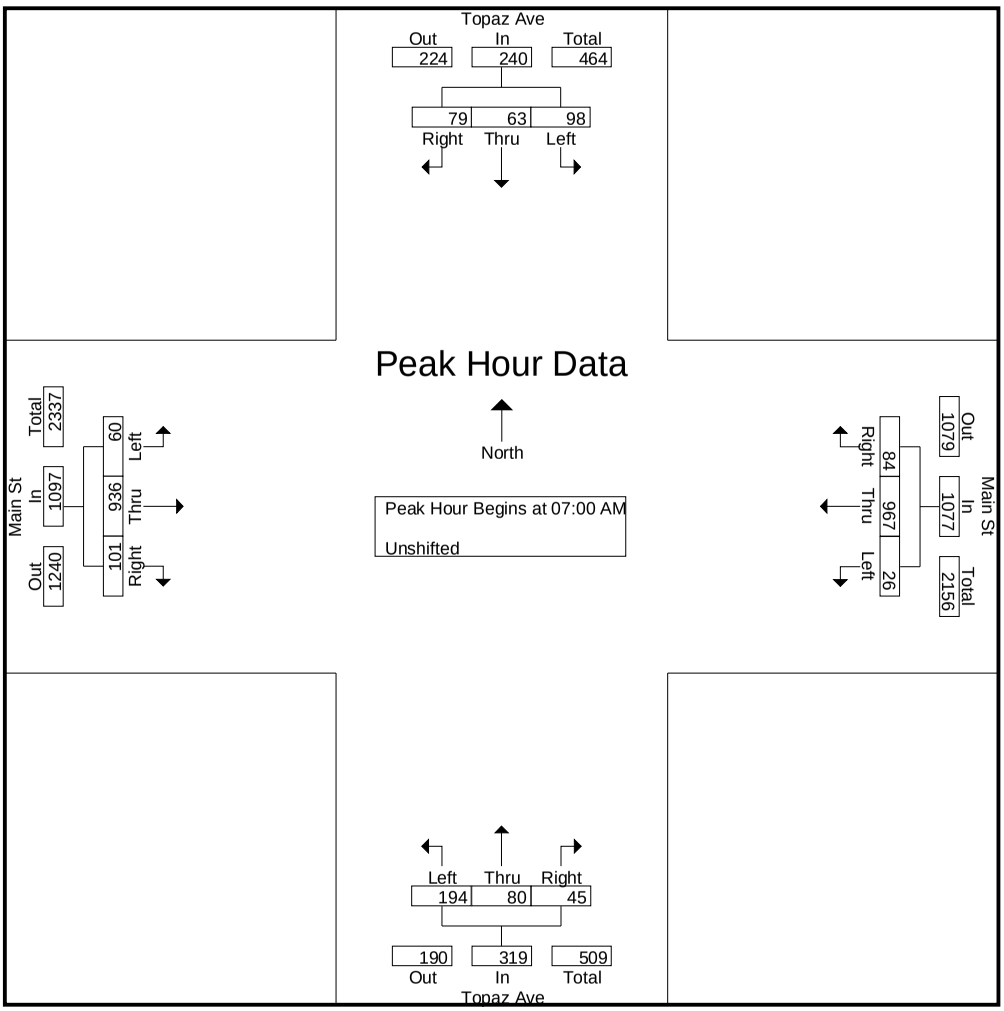

CITY TRAFFIC COUNTERS

www.ctcounters.com

File Name : Topaz_Main
Site Code : 00000000
Start Date : 8/24/2017
Page No : 3

	Topaz Ave Southbound				Main St Westbound				Topaz Ave Northbound				Main St Eastbound				
Start Time	Left	Thru	Right	App. Total	Left	Thru	Right	App. Total	Left	Thru	Right	App. Total	Left	Thru	Right	App. Total	Int. Total
Peak Hour Analysis From 12:00 PM to 05:45 PM - Peak 1 of 1																	
Peak Hour for Entire Intersection Begins at 05:00 PM																	
05:00 PM	11	15	12	38	**25**	**294**	13	**332**	39	**9**	19	67	15	337	53	405	842
05:15 PM	16	8	10	34	21	266	11	298	**43**	5	**21**	**69**	8	**392**	73	**473**	**874**
05:30 PM	**21**	**19**	**14**	**54**	18	254	14	286	38	6	19	63	15	306	66	387	790
05:45 PM	6	6	13	25	24	291	**15**	330	39	9	21	69	**18**	336	**77**	431	855
Total Volume	54	48	49	151	88	1105	53	1246	159	29	80	268	56	1371	269	1696	3361
% App. Total	35.8	31.8	32.5		7.1	88.7	4.3		59.3	10.8	29.9		3.3	80.8	15.9		
PHF	.643	.632	.875	.699	.880	.940	.883	.938	.924	.806	.952	.971	.778	.874	.873	.896	.961

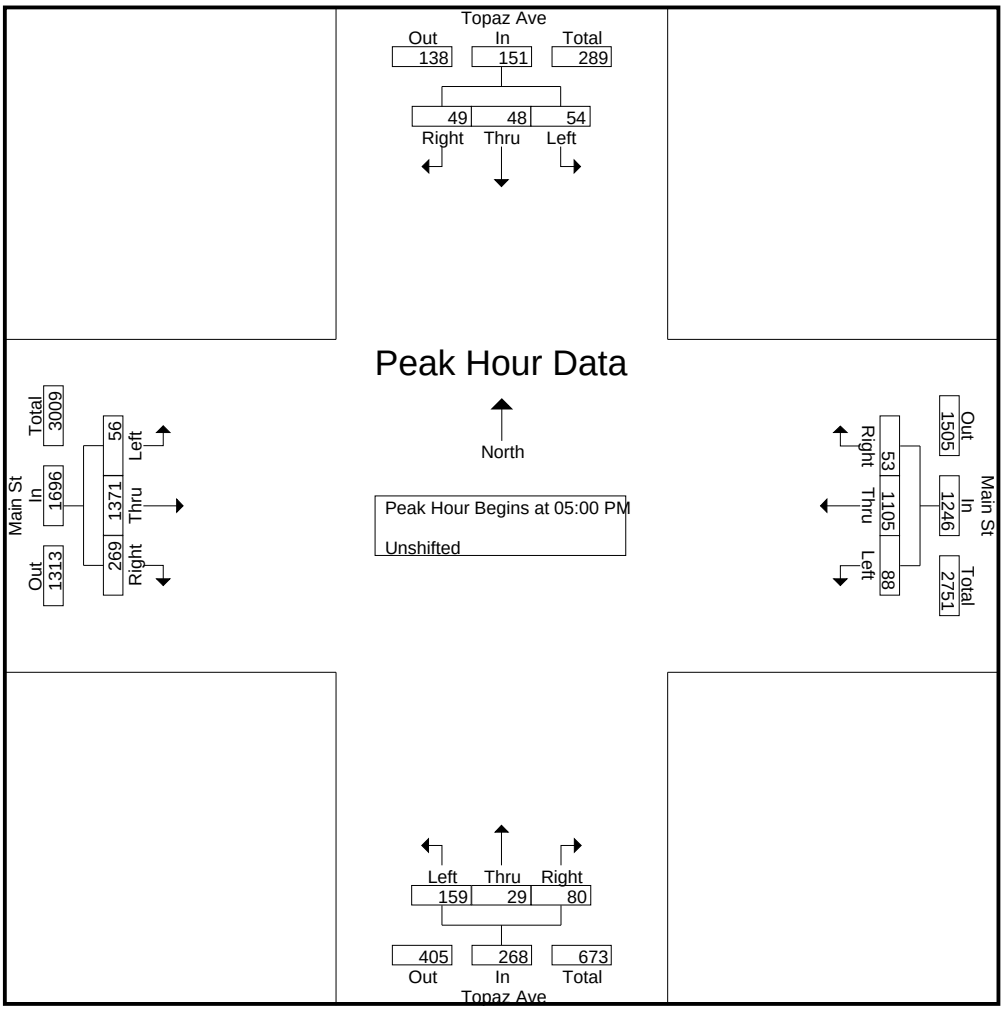

CITY TRAFFIC COUNTERS

www.ctcounters.com

File Name : Escondido_Major
Site Code : 00000000
Start Date : 8/24/2017
Page No : 1

Groups Printed- Unshifted

	Escondido Ave Southbound				Major Place Westbound			Escondido Ave Northbound			Eastbound			
Start Time	Left	Thru	Right	U-Turns	Left	Thru	Right	Left	Thru	Right	Left	Thru	Right	Int. Total
07:00 AM	18	176	0	1	8	0	6	0	231	16	0	0	0	456
07:15 AM	26	173	0	0	11	0	10	0	279	22	0	0	0	521
07:30 AM	39	127	0	0	9	0	13	0	266	42	0	0	0	496
07:45 AM	37	114	0	3	16	0	16	0	187	19	0	0	0	392
Total	120	590	0	4	44	0	45	0	963	99	0	0	0	1865
08:00 AM	21	130	0	0	11	0	15	0	199	26	0	0	0	402
08:15 AM	45	100	0	1	7	0	14	0	177	20	0	0	0	364
08:30 AM	45	77	0	0	16	0	20	0	128	16	0	0	0	302
08:45 AM	41	54	0	0	7	0	18	0	106	17	0	0	0	243
Total	152	361	0	1	41	0	67	0	610	79	0	0	0	1311
04:00 PM	80	177	0	2	27	0	31	0	139	27	0	0	0	483
04:15 PM	83	162	0	3	36	0	25	0	116	29	0	0	0	454
04:30 PM	86	188	0	2	33	0	30	0	135	28	0	0	0	502
04:45 PM	79	189	0	1	45	0	26	0	114	28	0	0	0	482
Total	328	716	0	8	141	0	112	0	504	112	0	0	0	1921
05:00 PM	72	181	0	4	44	0	19	0	128	33	0	0	0	481
05:15 PM	68	191	0	3	53	0	33	0	158	32	0	0	0	538
05:30 PM	68	162	0	1	38	0	21	0	153	37	0	0	0	480
05:45 PM	72	215	0	3	33	0	26	0	154	35	0	0	0	538
Total	280	749	0	11	168	0	99	0	593	137	0	0	0	2037
Grand Total	880	2416	0	24	394	0	323	0	2670	427	0	0	0	7134
Apprch %	26.5	72.8	0	0.7	55	0	45	0	86.2	13.8	0	0	0	
Total %	12.3	33.9	0	0.3	5.5	0	4.5	0	37.4	6	0	0	0	

CITY TRAFFIC COUNTERS

www.ctcounters.com

File Name : Escondido_Major
Site Code : 00000000
Start Date : 8/24/2017
Page No : 2

	Escondido Ave Southbound					Major Place Westbound				Escondido Ave Northbound				Eastbound				
Start Time	Left	Thru	Right	U-Turns	App. Total	Left	Thru	Right	App. Total	Left	Thru	Right	App. Total	Left	Thru	Right	App. Total	Int. Total
Peak Hour Analysis From 07:00 AM to 11:45 AM - Peak 1 of 1																		
Peak Hour for Entire Intersection Begins at 07:00 AM																		
07:00 AM	18	**176**	0	1	195	8	0	6	14	0	231	16	247	0	0	0	0	456
07:15 AM	26	173	0	0	**199**	11	0	10	21	0	**279**	22	301	0	0	0	0	**521**
07:30 AM	**39**	127	0	0	166	9	0	13	22	0	266	**42**	**308**	0	0	0	0	496
07:45 AM	37	114	0	**3**	154	**16**	0	**16**	**32**	0	187	19	206	0	0	0	0	392
Total Volume	120	590	0	4	714	44	0	45	89	0	963	99	1062	0	0	0	0	1865
% App. Total	16.8	82.6	0	0.6		49.4	0	50.6		0	90.7	9.3		0	0	0		
PHF	.769	.838	.000	.333	.897	.688	.000	.703	.695	.000	.863	.589	.862	.000	.000	.000	.000	.895

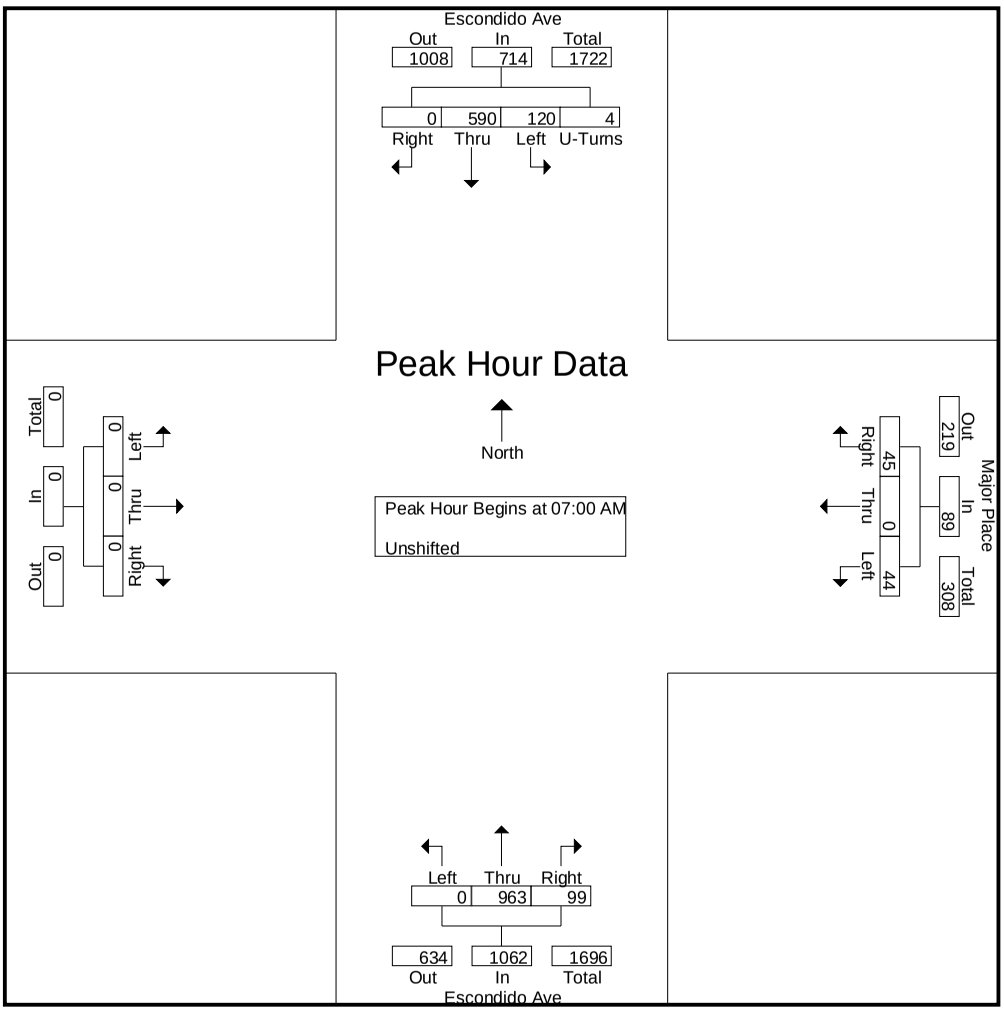

CITY TRAFFIC COUNTERS

www.ctcounters.com

File Name : Escondido_Major
Site Code : 00000000
Start Date : 8/24/2017
Page No : 3

	Escondido Ave Southbound					Major Place Westbound				Escondido Ave Northbound				Eastbound				
Start Time	Left	Thru	Right	U-Turns	App. Total	Left	Thru	Right	App. Total	Left	Thru	Right	App. Total	Left	Thru	Right	App. Total	Int. Total
Peak Hour Analysis From 12:00 PM to 05:45 PM - Peak 1 of 1																		
Peak Hour for Entire Intersection Begins at 05:00 PM																		
05:00 PM	**72**	181	0	**4**	257	44	0	19	63	0	128	33	161	0	0	0	0	481
05:15 PM	68	191	0	3	262	**53**	0	**33**	**86**	0	**158**	32	**190**	0	0	0	0	**538**
05:30 PM	68	162	0	1	231	38	0	21	59	0	153	**37**	190	0	0	0	0	480
05:45 PM	72	**215**	0	3	**290**	33	0	26	59	0	154	35	189	0	0	0	0	538
Total Volume	280	749	0	11	1040	168	0	99	267	0	593	137	730	0	0	0	0	2037
% App. Total	26.9	72	0	1.1		62.9	0	37.1		0	81.2	18.8		0	0	0		
PHF	.972	.871	.000	.688	.897	.792	.000	.750	.776	.000	.938	.926	.961	.000	.000	.000	.000	.947

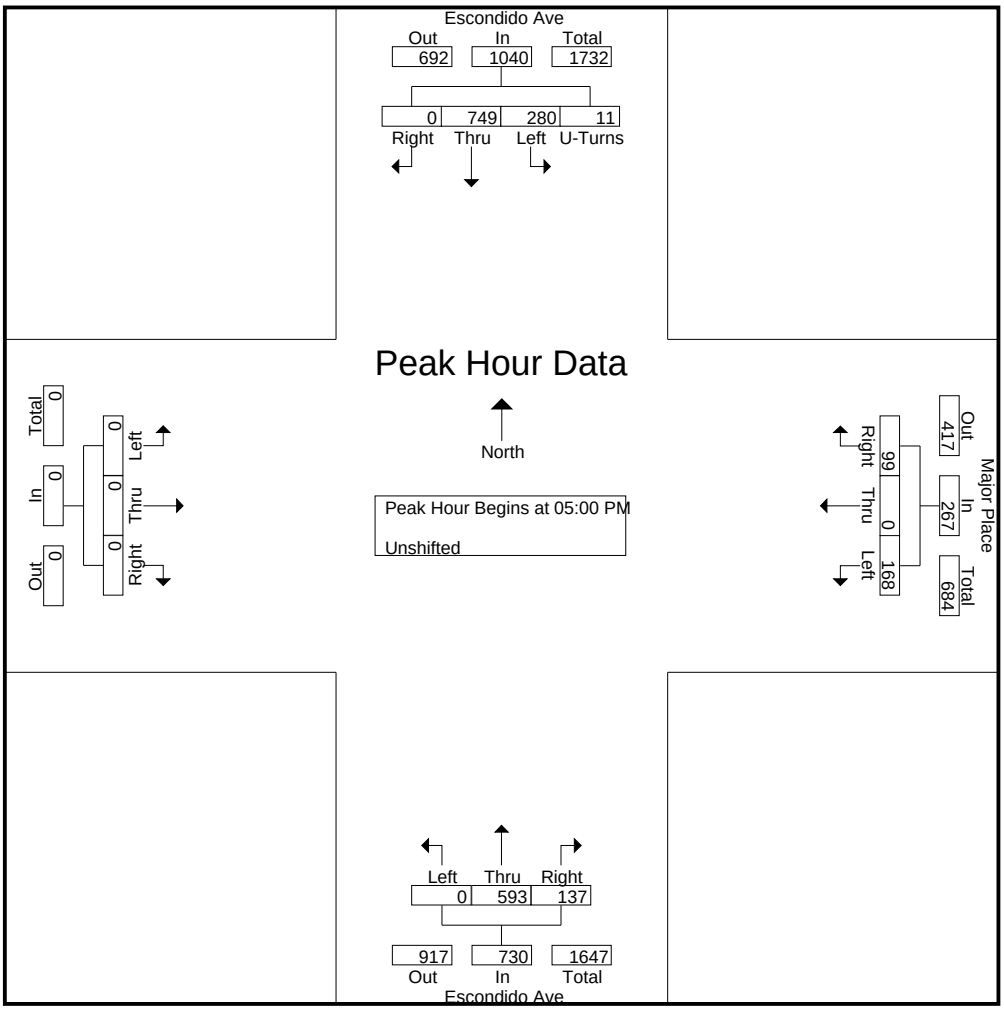

APPENDIX B

HCM AND LEVELS OF SERVICE EXPLANATION DATA WORKSHEETS -AM & PM PEAK HOURS

LEVEL OF SERVICE FOR SIGNALIZED INTERSECTIONS

In the *Highway Capacity Manual (HCM)*, published by the Transportation Research Board, 2000, level of service for signalized intersections is defined in terms of delay, which is a measure of driver discomfort, frustration, fuel consumption, and increased travel time. The delay experienced by a motorist is made up of a number of factors that relate to control, geometrics, traffic, and incidents. Total delay is the difference between the travel time actually experienced and the reference travel time that would result during base conditions: in the absence of traffic control, in the absence of geometric delay, in the absence of incidents, and when there are no other vehicles on the road. Only the portion of total delay attributed to the control facility is quantified. This delay is called *control delay*. Control delay includes initial deceleration delay, queue move-up time, stopped delay, and final acceleration delay.

Level of Service criteria for traffic signals are stated in terms of the average control delay per vehicle. Delay is a complex measure and is dependent on a number of variables, including the quality of progression, the cycle length, the green ratio, and the *v/c* ratio for the lane group in question.

Level of Service Criteria for Signalized Intersections

Level of Service	Control Delay (Sec/Veh)
A	≤ 10
B	> 10 and ≤ 20
C	> 20 and ≤ 35
D	> 35 and ≤ 55
E	> 55 and ≤ 80
F	> 80

Level of Service (LOS) values are used to describe intersection operations with service levels varying from LOS A (free flow) to LOS F (jammed condition). The following descriptions summarize *HCM* criteria for each level of service:

LOS A describes operations with very low control delay, up to 10 seconds per vehicle. This level of service occurs when progression is extremely favorable and most vehicles arrive during the green phase. Most vehicles do not stop at all. Short cycle lengths may also contribute to low delay values.

LOS B describes operations with control delay greater than 10 and up to 20 seconds per vehicle. This level generally occurs with good progression, short cycle lengths, or both. More vehicles stop than with LOS A, causing higher levels of delay.

LOS C describes operations with control delay greater than 20 and up to 35 seconds per vehicle. These higher delays may result from fair progression, longer cycle lengths, or both. Individual cycle failures may begin to appear at this level. The number of vehicles stopping is significant at this level, though many still pass through the intersection without stopping.

LOS D describes operations with control delay greater than 35 and up to 55 seconds per vehicle. At LOS D, the influence of congestion becomes more noticeable. Longer delays may result from some combination of unfavorable progression, long cycle lengths, or high *v/c* ratios. Many vehicles stop, and the proportion of vehicles not stopping declines. Individual cycle failures are noticeable.

LOS E describes operations with control delay greater than 55 and up to 80 seconds per vehicle. This level is considered by many agencies to be the limit of acceptable delay. These high delay values generally indicate poor progression, long cycle lengths, and high *v/c* ratios. Individual cycle failures are frequent occurrences.

LOS F describes operations with control delay in excess of 80 seconds per vehicle. This level, considered to be unacceptable to most drivers, often occurs with oversaturation, that is, when arrival flow rates exceed the capacity of the lane groups. It may also occur at high *v/c* ratios with many individual cycle failures. Poor progression and long cycle lengths may also be major contributing factors to such delay levels.

LEVEL OF SERVICE FOR UNSIGNALIZED INTERSECTIONS

In the *Highway Capacity Manual (HCM)*, published by the Transportation Research Board, level of service for unsignalized intersections is defined in terms of delay, which is a measure of driver discomfort, frustration, fuel consumption, and lost travel time. The delay experienced by a motorist is made up of a number of factors that relate to control, geometrics, traffic, and incidents. Total delay is the difference between the travel time actually experienced and the reference travel time that would result during base conditions, in the absence of incidents, control, traffic, or geometric delay. Only the portion of total delay attributed to the traffic control measures, either traffic signals or stop signs, is quantified. This delay is called *control delay*. Control delay includes initial deceleration delay, queue move-up time, stopped delay, and final acceleration delay.

Level of Service criteria for unsignalized intersections are stated in terms of the average control delay per vehicle. The level of service is determined by the computed or measured control delay and is defined for each minor movement. Average control delay for any particular minor movement is a function of the service time for the approach and the degree of utilization. (Level of service is not defined for the intersection as a whole for two-way stop controlled intersections.)

Level of Service Criteria for TWSC/AWSC Intersections

Level of Service	Average Control Delay (Sec/Veh)
A	≤ 10
B	> 10 and ≤ 15
C	> 15 and ≤ 25
D	> 25 and ≤ 35
E	> 35 and ≤ 50
F	> 50

Level of Service (LOS) values are used to describe intersection operations with service levels varying from LOS A (free flow) to LOS F (jammed condition). The following descriptions summarize *HCM* criteria for each level of service:

LOS A describes operations with very low control delay, up to 10 seconds per vehicle.

LOS B describes operations with control delay greater than 10 and up to 15 seconds per vehicle.

LOS C describes operations with control delay greater than 15 and up to 25 seconds per vehicle.

LOS D describes operations with control delay greater than 25 and up to 35 seconds per vehicle.

LOS E describes operations with control delay greater than 35 and up to 50 seconds per vehicle.

LOS F describes operations with control delay in excess of 50 seconds per vehicle. For two-way stop controlled intersections, LOS F exists when there are insufficient gaps of suitable size to allow side-street demand to safely cross through a major-street traffic stream. This level of service is generally evident from extremely long control delays experienced by side-street traffic and by queuing on the minor-street approaches.

Movement	EBL	EBT	EBR	WBL	WBT	WBR	NBL	NBT	NBR	SBL	SBT	SBR
Lane Configurations												
Traffic Volume (veh/h)	40	763	20	180	611	104	5	17	86	121	35	15
Future Volume (veh/h)	40	763	20	180	611	104	5	17	86	121	35	15
Initial Q (Qb), veh	0	0	0	0	0	0	0	0	0	0	0	0
Ped-Bike Adj(A_pbT)	1.00		1.00	1.00		1.00	1.00		1.00	1.00		1.00
Parking Bus, Adj	1.00	1.00	1.00	1.00	1.00	1.00	1.00	1.00	1.00	1.00	1.00	1.00
Work Zone On Approach		No			No			No			No	
Adj Sat Flow, veh/h/ln	1673	1772	1772	1673	1772	1772	1673	1772	1772	1673	1772	1772
Adj Flow Rate, veh/h	46	877	23	207	702	120	6	20	99	139	40	17
Peak Hour Factor	0.87	0.87	0.87	0.87	0.87	0.87	0.87	0.87	0.87	0.87	0.87	0.87
Percent Heavy Veh, %	2	2	2	2	2	2	2	2	2	2	2	2
Cap, veh/h	46	2557	794	196	3013	935	214	223	189	219	223	189
Arrive On Green	0.03	0.53	0.53	0.12	0.62	0.62	0.13	0.13	0.13	0.13	0.13	0.13
Sat Flow, veh/h	1594	4837	1502	1594	4837	1502	1272	1772	1502	1202	1772	1502
Grp Volume(v), veh/h	46	877	23	207	702	120	6	20	99	139	40	17
Grp Sat Flow(s),veh/h/ln	1594	1612	1502	1594	1612	1502	1272	1772	1502	1202	1772	1502
Q Serve(g_s), s	2.6	9.4	0.7	11.1	5.8	2.9	0.4	0.9	5.6	10.4	1.8	0.9
Cycle Q Clear(g_c), s	2.6	9.4	0.7	11.1	5.8	2.9	2.2	0.9	5.6	11.3	1.8	0.9
Prop In Lane	1.00		1.00	1.00		1.00	1.00		1.00	1.00		1.00
Lane Grp Cap(c), veh/h	46	2557	794	196	3013	935	214	223	189	219	223	189
V/C Ratio(X)	1.00	0.34	0.03	1.05	0.23	0.13	0.03	0.09	0.52	0.63	0.18	0.09
Avail Cap(c_a), veh/h	97	2557	794	328	3013	935	464	571	484	455	571	484
HCM Platoon Ratio	1.00	1.00	1.00	1.00	1.00	1.00	1.00	1.00	1.00	1.00	1.00	1.00
Upstream Filter(I)	1.00	1.00	1.00	0.98	0.98	0.98	1.00	1.00	1.00	1.00	1.00	1.00
Uniform Delay (d), s/veh	43.7	12.2	10.2	39.5	7.5	7.0	36.2	34.8	36.8	39.8	35.2	34.8
Incr Delay (d2), s/veh	37.4	0.4	0.1	51.3	0.2	0.3	0.0	0.1	0.8	1.1	0.1	0.1
Initial Q Delay(d3),s/veh	0.0	0.0	0.0	0.0	0.0	0.0	0.0	0.0	0.0	0.0	0.0	0.0
%ile BackOfQ(95%),veh/ln	2.6	5.3	0.4	11.4	2.9	1.4	0.2	0.7	0.1	5.6	1.4	0.6
Unsig. Movement Delay, s/veh												
LnGrp Delay(d),s/veh	81.1	12.6	10.2	90.7	7.7	7.2	36.2	34.8	37.6	40.9	35.3	34.8
LnGrp LOS	F	B	B	F	A	A	D	C	D	D	D	C
Approach Vol, veh/h		946			1029			125			196	
Approach Delay, s/veh		15.9			24.3			37.1			39.3	
Approach LOS		B			C			D			D	

Timer - Assigned Phs	1	2		4	5	6		8
Phs Duration (G+Y+Rc), s	8.6	63.0		18.4	17.1	54.6		18.4
Change Period (Y+Rc), s	4.0	5.0		5.0	4.0	5.0		5.0
Max Green Setting (Gmax), s	7.5	37.5		31.0	20.5	24.5		31.0
Max Q Clear Time (g_c+I1), s	4.6	7.8		13.3	13.1	11.4		7.6
Green Ext Time (p_c), s	0.0	0.7		0.1	0.0	0.9		0.0

Intersection Summary	
HCM 6th Ctrl Delay	22.8
HCM 6th LOS	C

Movement	EBL	EBT	EBR	WBL	WBT	WBR	NBL	NBT	NBR	SBL	SBT	SBR
Lane Configurations												
Traffic Volume (veh/h)	46	805	19	337	859	258	44	57	255	257	73	13
Future Volume (veh/h)	46	805	19	337	859	258	44	57	255	257	73	13
Initial Q (Qb), veh	0	0	0	0	0	0	0	0	0	0	0	0
Ped-Bike Adj(A_pbT)	1.00		1.00	1.00		1.00	1.00		1.00	1.00		1.00
Parking Bus, Adj	1.00	1.00	1.00	1.00	1.00	1.00	1.00	1.00	1.00	1.00	1.00	1.00
Work Zone On Approach		No			No			No			No	
Adj Sat Flow, veh/h/ln	1673	1772	1772	1673	1772	1772	1673	1772	1772	1673	1772	1772
Adj Flow Rate, veh/h	47	821	19	344	877	263	45	58	260	262	74	13
Peak Hour Factor	0.98	0.98	0.98	0.98	0.98	0.98	0.98	0.98	0.98	0.98	0.98	0.98
Percent Heavy Veh, %	2	2	2	2	2	2	2	2	2	2	2	2
Cap, veh/h	47	1332	413	344	2234	694	396	507	430	343	507	430
Arrive On Green	0.03	0.28	0.28	0.22	0.46	0.46	0.29	0.29	0.29	0.29	0.29	0.29
Sat Flow, veh/h	1594	4837	1502	1594	4837	1502	1237	1772	1502	1003	1772	1502
Grp Volume(v), veh/h	47	821	19	344	877	263	45	58	260	262	74	13
Grp Sat Flow(s),veh/h/ln	1594	1612	1502	1594	1612	1502	1237	1772	1502	1003	1772	1502
Q Serve(g_s), s	2.7	13.3	0.8	19.4	10.7	10.3	2.5	2.2	13.4	23.5	2.8	0.6
Cycle Q Clear(g_c), s	2.7	13.3	0.8	19.4	10.7	10.3	5.3	2.2	13.4	25.7	2.8	0.6
Prop In Lane	1.00		1.00	1.00		1.00	1.00		1.00	1.00		1.00
Lane Grp Cap(c), veh/h	47	1332	413	344	2234	694	396	507	430	343	507	430
V/C Ratio(X)	1.00	0.62	0.05	1.00	0.39	0.38	0.11	0.11	0.60	0.76	0.15	0.03
Avail Cap(c_a), veh/h	71	1332	413	390	2234	694	440	571	484	379	571	484
HCM Platoon Ratio	1.00	1.00	1.00	1.00	1.00	1.00	1.00	1.00	1.00	1.00	1.00	1.00
Upstream Filter(I)	1.00	1.00	1.00	0.83	0.83	0.83	1.00	1.00	1.00	1.00	1.00	1.00
Uniform Delay (d), s/veh	43.7	28.5	23.9	35.3	15.9	15.8	25.9	23.7	27.7	33.2	23.9	23.1
Incr Delay (d2), s/veh	80.9	2.1	0.2	38.8	0.4	1.3	0.0	0.0	0.9	6.9	0.0	0.0
Initial Q Delay(d3),s/veh	0.0	0.0	0.0	0.0	0.0	0.0	0.0	0.0	0.0	0.0	0.0	0.0
%ile BackOfQ(95%),veh/ln	3.7	8.6	0.5	15.5	6.4	6.0	1.4	1.6	8.5	10.4	2.1	0.4
Unsig. Movement Delay, s/veh												
LnGrp Delay(d),s/veh	124.6	30.6	24.1	74.1	16.3	17.1	25.9	23.7	28.7	40.1	24.0	23.1
LnGrp LOS	F	C	C	E	B	B	C	C	C	D	C	C
Approach Vol, veh/h		887			1484			363			349	
Approach Delay, s/veh		35.5			29.9			27.5			36.0	
Approach LOS		D			C			C			D	

Timer - Assigned Phs	1	2		4	5	6		8
Phs Duration (G+Y+Rc), s	8.7	48.6		32.8	25.5	31.8		32.8
Change Period (Y+Rc), s	4.0	5.0		5.0	4.0	5.0		5.0
Max Green Setting (Gmax), s	6.0	39.0		31.0	24.0	21.0		31.0
Max Q Clear Time (g_c+I1), s	4.7	12.7		27.7	21.4	15.3		15.4
Green Ext Time (p_c), s	0.0	0.9		0.1	0.0	0.7		0.1

Intersection Summary		
HCM 6th Ctrl Delay		31.9
HCM 6th LOS		C

Movement	EBL	EBT	EBR	WBL	WBT	WBR	NBL	NBT	NBR	SBL	SBT	SBR
Lane Configurations												
Traffic Volume (veh/h)	40	778	20	180	615	104	5	17	86	121	35	15
Future Volume (veh/h)	40	778	20	180	615	104	5	17	86	121	35	15
Initial Q (Qb), veh	0	0	0	0	0	0	0	0	0	0	0	0
Ped-Bike Adj(A_pbT)	1.00		1.00	1.00		1.00	1.00		1.00	1.00		1.00
Parking Bus, Adj	1.00	1.00	1.00	1.00	1.00	1.00	1.00	1.00	1.00	1.00	1.00	1.00
Work Zone On Approach		No			No			No			No	
Adj Sat Flow, veh/h/ln	1673	1772	1772	1673	1772	1772	1673	1772	1772	1673	1772	1772
Adj Flow Rate, veh/h	46	894	23	207	707	120	6	20	99	139	40	17
Peak Hour Factor	0.87	0.87	0.87	0.87	0.87	0.87	0.87	0.87	0.87	0.87	0.87	0.87
Percent Heavy Veh, %	2	2	2	2	2	2	2	2	2	2	2	2
Cap, veh/h	46	2557	794	196	3013	935	214	223	189	219	223	189
Arrive On Green	0.03	0.53	0.53	0.12	0.62	0.62	0.13	0.13	0.13	0.13	0.13	0.13
Sat Flow, veh/h	1594	4837	1502	1594	4837	1502	1272	1772	1502	1202	1772	1502
Grp Volume(v), veh/h	46	894	23	207	707	120	6	20	99	139	40	17
Grp Sat Flow(s),veh/h/ln	1594	1612	1502	1594	1612	1502	1272	1772	1502	1202	1772	1502
Q Serve(g_s), s	2.6	9.6	0.7	11.1	5.8	2.9	0.4	0.9	5.6	10.4	1.8	0.9
Cycle Q Clear(g_c), s	2.6	9.6	0.7	11.1	5.8	2.9	2.2	0.9	5.6	11.3	1.8	0.9
Prop In Lane	1.00		1.00	1.00		1.00	1.00		1.00	1.00		1.00
Lane Grp Cap(c), veh/h	46	2557	794	196	3013	935	214	223	189	219	223	189
V/C Ratio(X)	1.00	0.35	0.03	1.05	0.23	0.13	0.03	0.09	0.52	0.63	0.18	0.09
Avail Cap(c_a), veh/h	97	2557	794	328	3013	935	464	571	484	455	571	484
HCM Platoon Ratio	1.00	1.00	1.00	1.00	1.00	1.00	1.00	1.00	1.00	1.00	1.00	1.00
Upstream Filter(I)	1.00	1.00	1.00	0.98	0.98	0.98	1.00	1.00	1.00	1.00	1.00	1.00
Uniform Delay (d), s/veh	43.7	12.3	10.2	39.5	7.5	7.0	36.2	34.8	36.8	39.8	35.2	34.8
Incr Delay (d2), s/veh	37.4	0.4	0.1	51.3	0.2	0.3	0.0	0.1	0.8	1.1	0.1	0.1
Initial Q Delay(d3),s/veh	0.0	0.0	0.0	0.0	0.0	0.0	0.0	0.0	0.0	0.0	0.0	0.0
%ile BackOfQ(95%),veh/ln	2.6	5.4	0.4	11.4	2.9	1.4	0.2	0.7	0.1	5.6	1.4	0.6
Unsig. Movement Delay, s/veh												
LnGrp Delay(d),s/veh	81.1	12.6	10.2	90.7	7.7	7.2	36.2	34.8	37.6	40.9	35.3	34.8
LnGrp LOS	F	B	B	F	A	A	D	C	D	D	D	C
Approach Vol, veh/h		963			1034			125			196	
Approach Delay, s/veh		15.9			24.3			37.1			39.3	
Approach LOS		B			C			D			D	

Timer - Assigned Phs	1	2		4	5	6		8
Phs Duration (G+Y+Rc), s	8.6	63.0		18.4	17.1	54.6		18.4
Change Period (Y+Rc), s	4.0	5.0		5.0	4.0	5.0		5.0
Max Green Setting (Gmax), s	7.5	37.5		31.0	20.5	24.5		31.0
Max Q Clear Time (g_c+I1), s	4.6	7.8		13.3	13.1	11.6		7.6
Green Ext Time (p_c), s	0.0	0.7		0.1	0.0	0.9		0.0

Intersection Summary	
HCM 6th Ctrl Delay	22.7
HCM 6th LOS	C

Movement	EBL	EBT	EBR	WBL	WBT	WBR	NBL	NBT	NBR	SBL	SBT	SBR
Lane Configurations												
Traffic Volume (veh/h)	46	813	19	337	880	258	44	57	255	257	73	13
Future Volume (veh/h)	46	813	19	337	880	258	44	57	255	257	73	13
Initial Q (Qb), veh	0	0	0	0	0	0	0	0	0	0	0	0
Ped-Bike Adj(A_pbT)	1.00		1.00	1.00		1.00	1.00		1.00	1.00		1.00
Parking Bus, Adj	1.00	1.00	1.00	1.00	1.00	1.00	1.00	1.00	1.00	1.00	1.00	1.00
Work Zone On Approach		No			No			No			No	
Adj Sat Flow, veh/h/ln	1673	1772	1772	1673	1772	1772	1673	1772	1772	1673	1772	1772
Adj Flow Rate, veh/h	47	830	19	344	898	263	45	58	260	262	74	13
Peak Hour Factor	0.98	0.98	0.98	0.98	0.98	0.98	0.98	0.98	0.98	0.98	0.98	0.98
Percent Heavy Veh, %	2	2	2	2	2	2	2	2	2	2	2	2
Cap, veh/h	47	1332	413	344	2234	694	396	507	430	343	507	430
Arrive On Green	0.03	0.28	0.28	0.22	0.46	0.46	0.29	0.29	0.29	0.29	0.29	0.29
Sat Flow, veh/h	1594	4837	1502	1594	4837	1502	1237	1772	1502	1003	1772	1502
Grp Volume(v), veh/h	47	830	19	344	898	263	45	58	260	262	74	13
Grp Sat Flow(s),veh/h/ln	1594	1612	1502	1594	1612	1502	1237	1772	1502	1003	1772	1502
Q Serve(g_s), s	2.7	13.5	0.8	19.4	11.0	10.3	2.5	2.2	13.4	23.5	2.8	0.6
Cycle Q Clear(g_c), s	2.7	13.5	0.8	19.4	11.0	10.3	5.3	2.2	13.4	25.7	2.8	0.6
Prop In Lane	1.00		1.00	1.00		1.00	1.00		1.00	1.00		1.00
Lane Grp Cap(c), veh/h	47	1332	413	344	2234	694	396	507	430	343	507	430
V/C Ratio(X)	1.00	0.62	0.05	1.00	0.40	0.38	0.11	0.11	0.60	0.76	0.15	0.03
Avail Cap(c_a), veh/h	71	1332	413	390	2234	694	440	571	484	379	571	484
HCM Platoon Ratio	1.00	1.00	1.00	1.00	1.00	1.00	1.00	1.00	1.00	1.00	1.00	1.00
Upstream Filter(I)	1.00	1.00	1.00	0.82	0.82	0.82	1.00	1.00	1.00	1.00	1.00	1.00
Uniform Delay (d), s/veh	43.7	28.5	23.9	35.3	16.0	15.8	25.9	23.7	27.7	33.2	23.9	23.1
Incr Delay (d2), s/veh	80.9	2.2	0.2	38.6	0.4	1.3	0.0	0.0	0.9	6.9	0.0	0.0
Initial Q Delay(d3),s/veh	0.0	0.0	0.0	0.0	0.0	0.0	0.0	0.0	0.0	0.0	0.0	0.0
%ile BackOfQ(95%),veh/ln	3.7	8.7	0.5	15.5	6.5	6.0	1.4	1.6	8.5	10.4	2.1	0.4
Unsig. Movement Delay, s/veh												
LnGrp Delay(d),s/veh	124.6	30.7	24.1	73.9	16.4	17.1	25.9	23.7	28.7	40.1	24.0	23.1
LnGrp LOS	F	C	C	E	B	B	C	C	C	D	C	C
Approach Vol, veh/h		896			1505			363			349	
Approach Delay, s/veh		35.5			29.7			27.5			36.0	
Approach LOS		D			C			C			D	

Timer - Assigned Phs	1	2		4	5	6		8
Phs Duration (G+Y+Rc), s	8.7	48.6		32.8	25.5	31.8		32.8
Change Period (Y+Rc), s	4.0	5.0		5.0	4.0	5.0		5.0
Max Green Setting (Gmax), s	6.0	39.0		31.0	24.0	21.0		31.0
Max Q Clear Time (g_c+I1), s	4.7	13.0		27.7	21.4	15.5		15.4
Green Ext Time (p_c), s	0.0	0.9		0.1	0.0	0.6		0.1

Intersection Summary		
HCM 6th Ctrl Delay		31.8
HCM 6th LOS		C

Movement	EBL	EBT	EBR	WBL	WBT	WBR	NBL	NBT	NBR	SBL	SBT	SBR
Lane Configurations												
Traffic Volume (veh/h)	43	924	21	187	782	114	5	18	89	128	36	16
Future Volume (veh/h)	43	924	21	187	782	114	5	18	89	128	36	16
Initial Q (Qb), veh	0	0	0	0	0	0	0	0	0	0	0	0
Ped-Bike Adj(A_pbT)	1.00		1.00	1.00		1.00	1.00		1.00	1.00		1.00
Parking Bus, Adj	1.00	1.00	1.00	1.00	1.00	1.00	1.00	1.00	1.00	1.00	1.00	1.00
Work Zone On Approach		No			No			No			No	
Adj Sat Flow, veh/h/ln	1673	1772	1772	1673	1772	1772	1673	1772	1772	1673	1772	1772
Adj Flow Rate, veh/h	49	1062	24	215	899	131	6	21	102	147	41	18
Peak Hour Factor	0.87	0.87	0.87	0.87	0.87	0.87	0.87	0.87	0.87	0.87	0.87	0.87
Percent Heavy Veh, %	2	2	2	2	2	2	2	2	2	2	2	2
Cap, veh/h	49	2486	772	207	2966	921	223	237	201	227	237	201
Arrive On Green	0.03	0.51	0.51	0.13	0.61	0.61	0.13	0.13	0.13	0.13	0.13	0.13
Sat Flow, veh/h	1594	4837	1502	1594	4837	1502	1269	1772	1502	1198	1772	1502
Grp Volume(v), veh/h	49	1062	24	215	899	131	6	21	102	147	41	18
Grp Sat Flow(s),veh/h/ln	1594	1612	1502	1594	1612	1502	1269	1772	1502	1198	1772	1502
Q Serve(g_s), s	2.8	12.3	0.7	11.7	7.9	3.3	0.4	0.9	5.7	11.0	1.8	0.9
Cycle Q Clear(g_c), s	2.8	12.3	0.7	11.7	7.9	3.3	2.3	0.9	5.7	12.0	1.8	0.9
Prop In Lane	1.00		1.00	1.00		1.00	1.00		1.00	1.00		1.00
Lane Grp Cap(c), veh/h	49	2486	772	207	2966	921	223	237	201	227	237	201
V/C Ratio(X)	1.00	0.43	0.03	1.04	0.30	0.14	0.03	0.09	0.51	0.65	0.17	0.09
Avail Cap(c_a), veh/h	97	2486	772	328	2966	921	463	571	484	453	571	484
HCM Platoon Ratio	1.00	1.00	1.00	1.00	1.00	1.00	1.00	1.00	1.00	1.00	1.00	1.00
Upstream Filter(I)	1.00	1.00	1.00	0.96	0.96	0.96	1.00	1.00	1.00	1.00	1.00	1.00
Uniform Delay (d), s/veh	43.6	13.6	10.8	39.1	8.3	7.4	35.6	34.2	36.2	39.4	34.6	34.2
Incr Delay (d2), s/veh	37.5	0.5	0.1	47.2	0.3	0.3	0.0	0.1	0.7	1.1	0.1	0.1
Initial Q Delay(d3),s/veh	0.0	0.0	0.0	0.0	0.0	0.0	0.0	0.0	0.0	0.0	0.0	0.0
%ile BackOfQ(95%),veh/ln	2.8	7.1	0.4	11.4	4.0	1.7	0.2	0.7	3.8	5.9	1.5	0.6
Unsig. Movement Delay, s/veh												
LnGrp Delay(d),s/veh	81.1	14.2	10.9	86.3	8.5	7.7	35.6	34.2	37.0	40.6	34.7	34.2
LnGrp LOS	F	B	B	F	A	A	D	C	D	D	C	C
Approach Vol, veh/h		1135			1245			129			206	
Approach Delay, s/veh		17.0			21.9			36.4			38.9	
Approach LOS		B			C			D			D	

Timer - Assigned Phs	1	2		4	5	6		8
Phs Duration (G+Y+Rc), s	8.8	62.2		19.1	17.7	53.3		19.1
Change Period (Y+Rc), s	4.0	5.0		5.0	4.0	5.0		5.0
Max Green Setting (Gmax), s	7.5	37.5		31.0	20.5	24.5		31.0
Max Q Clear Time (g_c+I1), s	4.8	9.9		14.0	13.7	14.3		7.7
Green Ext Time (p_c), s	0.0	0.9		0.1	0.0	1.1		0.0

Intersection Summary	
HCM 6th Ctrl Delay	21.8
HCM 6th LOS	C

Movement	EBL	EBT	EBR	WBL	WBT	WBR	NBL	NBT	NBR	SBL	SBT	SBR
Lane Configurations												
Traffic Volume (veh/h)	49	1019	20	351	1076	271	46	59	265	273	76	15
Future Volume (veh/h)	49	1019	20	351	1076	271	46	59	265	273	76	15
Initial Q (Qb), veh	0	0	0	0	0	0	0	0	0	0	0	0
Ped-Bike Adj(A_pbT)	1.00		1.00	1.00		1.00	1.00		1.00	1.00		1.00
Parking Bus, Adj	1.00	1.00	1.00	1.00	1.00	1.00	1.00	1.00	1.00	1.00	1.00	1.00
Work Zone On Approach		No			No			No			No	
Adj Sat Flow, veh/h/ln	1673	1772	1772	1673	1772	1772	1673	1772	1772	1673	1772	1772
Adj Flow Rate, veh/h	50	1040	20	358	1098	277	47	60	270	279	78	15
Peak Hour Factor	0.98	0.98	0.98	0.98	0.98	0.98	0.98	0.98	0.98	0.98	0.98	0.98
Percent Heavy Veh, %	2	2	2	2	2	2	2	2	2	2	2	2
Cap, veh/h	50	1194	371	358	2129	661	418	543	460	360	543	460
Arrive On Green	0.03	0.25	0.25	0.22	0.44	0.44	0.31	0.31	0.31	0.31	0.31	0.31
Sat Flow, veh/h	1594	4837	1502	1594	4837	1502	1231	1772	1502	992	1772	1502
Grp Volume(v), veh/h	50	1040	20	358	1098	277	47	60	270	279	78	15
Grp Sat Flow(s),veh/h/ln	1594	1612	1502	1594	1612	1502	1231	1772	1502	992	1772	1502
Q Serve(g_s), s	2.8	18.6	0.9	20.2	14.8	11.4	2.6	2.2	13.7	25.3	2.9	0.6
Cycle Q Clear(g_c), s	2.8	18.6	0.9	20.2	14.8	11.4	5.5	2.2	13.7	27.5	2.9	0.6
Prop In Lane	1.00		1.00	1.00		1.00	1.00		1.00	1.00		1.00
Lane Grp Cap(c), veh/h	50	1194	371	358	2129	661	418	543	460	360	543	460
V/C Ratio(X)	1.00	0.87	0.05	1.00	0.52	0.42	0.11	0.11	0.59	0.78	0.14	0.03
Avail Cap(c_a), veh/h	71	1194	371	390	2129	661	437	571	484	375	571	484
HCM Platoon Ratio	1.00	1.00	1.00	1.00	1.00	1.00	1.00	1.00	1.00	1.00	1.00	1.00
Upstream Filter(I)	1.00	1.00	1.00	0.74	0.74	0.74	1.00	1.00	1.00	1.00	1.00	1.00
Uniform Delay (d), s/veh	43.6	32.5	25.9	34.9	18.2	17.3	24.6	22.4	26.4	32.3	22.7	21.9
Incr Delay (d2), s/veh	86.1	8.9	0.3	37.5	0.7	1.4	0.0	0.0	1.0	8.4	0.0	0.0
Initial Q Delay(d3),s/veh	0.0	0.0	0.0	0.0	0.0	0.0	0.0	0.0	0.0	0.0	0.0	0.0
%ile BackOfQ(95%),veh/ln	4.1	12.2	0.6	15.6	8.1	6.5	1.4	1.6	8.6	11.0	2.2	0.4
Unsig. Movement Delay, s/veh												
LnGrp Delay(d),s/veh	129.7	41.4	26.2	72.4	18.9	18.7	24.7	22.5	27.4	40.7	22.7	21.9
LnGrp LOS	F	D	C	E	B	B	C	C	C	D	C	C
Approach Vol, veh/h		1110			1733			377			372	
Approach Delay, s/veh		45.1			29.9			26.3			36.2	
Approach LOS		D			C			C			D	

Timer - Assigned Phs	1	2		4	5	6		8
Phs Duration (G+Y+Rc), s	8.8	46.6		34.6	26.2	29.2		34.6
Change Period (Y+Rc), s	4.0	5.0		5.0	4.0	5.0		5.0
Max Green Setting (Gmax), s	6.0	39.0		31.0	24.0	21.0		31.0
Max Q Clear Time (g_c+I1), s	4.8	16.8		29.5	22.2	20.6		15.7
Green Ext Time (p_c), s	0.0	1.1		0.1	0.0	0.1		0.1

Intersection Summary		
HCM 6th Ctrl Delay		34.9
HCM 6th LOS		C

Movement	EBL	EBT	EBR	WBL	WBT	WBR	NBL	NBT	NBR	SBL	SBT	SBR
Lane Configurations												
Traffic Volume (veh/h)	43	939	21	187	786	114	5	18	89	128	36	16
Future Volume (veh/h)	43	939	21	187	786	114	5	18	89	128	36	16
Initial Q (Qb), veh	0	0	0	0	0	0	0	0	0	0	0	0
Ped-Bike Adj(A_pbT)	1.00		1.00	1.00		1.00	1.00		1.00	1.00		1.00
Parking Bus, Adj	1.00	1.00	1.00	1.00	1.00	1.00	1.00	1.00	1.00	1.00	1.00	1.00
Work Zone On Approach		No			No			No			No	
Adj Sat Flow, veh/h/ln	1673	1772	1772	1673	1772	1772	1673	1772	1772	1673	1772	1772
Adj Flow Rate, veh/h	49	1079	24	215	903	131	6	21	102	147	41	18
Peak Hour Factor	0.87	0.87	0.87	0.87	0.87	0.87	0.87	0.87	0.87	0.87	0.87	0.87
Percent Heavy Veh, %	2	2	2	2	2	2	2	2	2	2	2	2
Cap, veh/h	49	2486	772	207	2966	921	223	237	201	227	237	201
Arrive On Green	0.03	0.51	0.51	0.13	0.61	0.61	0.13	0.13	0.13	0.13	0.13	0.13
Sat Flow, veh/h	1594	4837	1502	1594	4837	1502	1269	1772	1502	1198	1772	1502
Grp Volume(v), veh/h	49	1079	24	215	903	131	6	21	102	147	41	18
Grp Sat Flow(s),veh/h/ln	1594	1612	1502	1594	1612	1502	1269	1772	1502	1198	1772	1502
Q Serve(g_s), s	2.8	12.6	0.7	11.7	8.0	3.3	0.4	0.9	5.7	11.0	1.8	0.9
Cycle Q Clear(g_c), s	2.8	12.6	0.7	11.7	8.0	3.3	2.3	0.9	5.7	12.0	1.8	0.9
Prop In Lane	1.00		1.00	1.00		1.00	1.00		1.00	1.00		1.00
Lane Grp Cap(c), veh/h	49	2486	772	207	2966	921	223	237	201	227	237	201
V/C Ratio(X)	1.00	0.43	0.03	1.04	0.30	0.14	0.03	0.09	0.51	0.65	0.17	0.09
Avail Cap(c_a), veh/h	97	2486	772	328	2966	921	463	571	484	453	571	484
HCM Platoon Ratio	1.00	1.00	1.00	1.00	1.00	1.00	1.00	1.00	1.00	1.00	1.00	1.00
Upstream Filter(I)	1.00	1.00	1.00	0.96	0.96	0.96	1.00	1.00	1.00	1.00	1.00	1.00
Uniform Delay (d), s/veh	43.6	13.7	10.8	39.1	8.3	7.4	35.6	34.2	36.2	39.4	34.6	34.2
Incr Delay (d2), s/veh	37.5	0.6	0.1	47.2	0.3	0.3	0.0	0.1	0.7	1.1	0.1	0.1
Initial Q Delay(d3),s/veh	0.0	0.0	0.0	0.0	0.0	0.0	0.0	0.0	0.0	0.0	0.0	0.0
%ile BackOfQ(95%),veh/ln	2.8	7.2	0.4	11.4	4.1	1.7	0.2	0.7	3.8	5.9	1.5	0.6
Unsig. Movement Delay, s/veh												
LnGrp Delay(d),s/veh	81.1	14.2	10.9	86.3	8.5	7.7	35.6	34.2	37.0	40.6	34.7	34.2
LnGrp LOS	F	B	B	F	A	A	D	C	D	D	C	C
Approach Vol, veh/h		1152			1249			129			206	
Approach Delay, s/veh		17.0			21.8			36.4			38.9	
Approach LOS		B			C			D			D	

Timer - Assigned Phs	1	2		4	5	6		8
Phs Duration (G+Y+Rc), s	8.8	62.2		19.1	17.7	53.3		19.1
Change Period (Y+Rc), s	4.0	5.0		5.0	4.0	5.0		5.0
Max Green Setting (Gmax), s	7.5	37.5		31.0	20.5	24.5		31.0
Max Q Clear Time (g_c+I1), s	4.8	10.0		14.0	13.7	14.6		7.7
Green Ext Time (p_c), s	0.0	0.9		0.1	0.0	1.1		0.0

Intersection Summary	
HCM 6th Ctrl Delay	21.8
HCM 6th LOS	C

Movement	EBL	EBT	EBR	WBL	WBT	WBR	NBL	NBT	NBR	SBL	SBT	SBR
Lane Configurations												
Traffic Volume (veh/h)	49	1027	20	351	1097	271	46	59	265	273	76	15
Future Volume (veh/h)	49	1027	20	351	1097	271	46	59	265	273	76	15
Initial Q (Qb), veh	0	0	0	0	0	0	0	0	0	0	0	0
Ped-Bike Adj(A_pbT)	1.00		1.00	1.00		1.00	1.00		1.00	1.00		1.00
Parking Bus, Adj	1.00	1.00	1.00	1.00	1.00	1.00	1.00	1.00	1.00	1.00	1.00	1.00
Work Zone On Approach		No			No			No			No	
Adj Sat Flow, veh/h/ln	1673	1772	1772	1673	1772	1772	1673	1772	1772	1673	1772	1772
Adj Flow Rate, veh/h	50	1048	20	358	1119	277	47	60	270	279	78	15
Peak Hour Factor	0.98	0.98	0.98	0.98	0.98	0.98	0.98	0.98	0.98	0.98	0.98	0.98
Percent Heavy Veh, %	2	2	2	2	2	2	2	2	2	2	2	2
Cap, veh/h	50	1194	371	358	2129	661	418	543	460	360	543	460
Arrive On Green	0.03	0.25	0.25	0.22	0.44	0.44	0.31	0.31	0.31	0.31	0.31	0.31
Sat Flow, veh/h	1594	4837	1502	1594	4837	1502	1231	1772	1502	992	1772	1502
Grp Volume(v), veh/h	50	1048	20	358	1119	277	47	60	270	279	78	15
Grp Sat Flow(s),veh/h/ln	1594	1612	1502	1594	1612	1502	1231	1772	1502	992	1772	1502
Q Serve(g_s), s	2.8	18.7	0.9	20.2	15.2	11.4	2.6	2.2	13.7	25.3	2.9	0.6
Cycle Q Clear(g_c), s	2.8	18.7	0.9	20.2	15.2	11.4	5.5	2.2	13.7	27.5	2.9	0.6
Prop In Lane	1.00		1.00	1.00		1.00	1.00		1.00	1.00		1.00
Lane Grp Cap(c), veh/h	50	1194	371	358	2129	661	418	543	460	360	543	460
V/C Ratio(X)	1.00	0.88	0.05	1.00	0.53	0.42	0.11	0.11	0.59	0.78	0.14	0.03
Avail Cap(c_a), veh/h	71	1194	371	390	2129	661	437	571	484	375	571	484
HCM Platoon Ratio	1.00	1.00	1.00	1.00	1.00	1.00	1.00	1.00	1.00	1.00	1.00	1.00
Upstream Filter(I)	1.00	1.00	1.00	0.74	0.74	0.74	1.00	1.00	1.00	1.00	1.00	1.00
Uniform Delay (d), s/veh	43.6	32.6	25.9	34.9	18.3	17.3	24.6	22.4	26.4	32.3	22.7	21.9
Incr Delay (d2), s/veh	86.1	9.3	0.3	37.5	0.7	1.4	0.0	0.0	1.0	8.4	0.0	0.0
Initial Q Delay(d3),s/veh	0.0	0.0	0.0	0.0	0.0	0.0	0.0	0.0	0.0	0.0	0.0	0.0
%ile BackOfQ(95%),veh/ln	4.1	12.3	0.6	15.6	8.3	6.5	1.4	1.6	8.6	11.0	2.2	0.4
Unsig. Movement Delay, s/veh												
LnGrp Delay(d),s/veh	129.7	41.9	26.2	72.4	19.0	18.7	24.7	22.5	27.4	40.7	22.7	21.9
LnGrp LOS	F	D	C	E	B	B	C	C	C	D	C	C
Approach Vol, veh/h		1118			1754			377			372	
Approach Delay, s/veh		45.5			29.9			26.3			36.2	
Approach LOS		D			C			C			D	

Timer - Assigned Phs	1	2		4	5	6		8
Phs Duration (G+Y+Rc), s	8.8	46.6		34.6	26.2	29.2		34.6
Change Period (Y+Rc), s	4.0	5.0		5.0	4.0	5.0		5.0
Max Green Setting (Gmax), s	6.0	39.0		31.0	24.0	21.0		31.0
Max Q Clear Time (g_c+I1), s	4.8	17.2		29.5	22.2	20.7		15.7
Green Ext Time (p_c), s	0.0	1.1		0.1	0.0	0.1		0.1

Intersection Summary		
HCM 6th Ctrl Delay		35.0
HCM 6th LOS		C

Movement	EBL	EBT	WBT	WBR	SBL	SBR
Lane Configurations						
Traffic Volume (veh/h)	0	805	642	0	307	160
Future Volume (veh/h)	0	805	642	0	307	160
Initial Q (Qb), veh	0	0	0	0	0	0
Ped-Bike Adj(A_pbT)	1.00			1.00	1.00	1.00
Parking Bus, Adj	1.00	1.00	1.00	1.00	1.00	1.00
Work Zone On Approach		No	No		No	
Adj Sat Flow, veh/h/ln	0	1772	1772	0	1575	1772
Adj Flow Rate, veh/h	0	847	676	0	323	168
Peak Hour Factor	0.95	0.95	0.95	0.95	0.95	0.95
Percent Heavy Veh, %	0	2	2	0	2	2
Cap, veh/h	0	3368	3368	0	375	193
Arrive On Green	0.00	0.70	0.70	0.00	0.13	0.13
Sat Flow, veh/h	0	5156	5156	0	2910	1502
Grp Volume(v), veh/h	0	847	676	0	323	168
Grp Sat Flow(s),veh/h/ln	0	1612	1612	0	1455	1502
Q Serve(g_s), s	0.0	5.2	3.9	0.0	8.7	8.8
Cycle Q Clear(g_c), s	0.0	5.2	3.9	0.0	8.7	8.8
Prop In Lane	0.00			0.00	1.00	1.00
Lane Grp Cap(c), veh/h	0	3368	3368	0	375	193
V/C Ratio(X)	0.00	0.25	0.20	0.00	0.86	0.87
Avail Cap(c_a), veh/h	0	3368	3368	0	873	450
HCM Platoon Ratio	1.00	1.00	1.00	1.00	1.00	1.00
Upstream Filter(I)	0.00	0.91	0.93	0.00	1.00	1.00
Uniform Delay (d), s/veh	0.0	4.5	4.3	0.0	34.1	34.2
Incr Delay (d2), s/veh	0.0	0.2	0.1	0.0	5.9	11.2
Initial Q Delay(d3),s/veh	0.0	0.0	0.0	0.0	0.0	0.0
%ile BackOfQ(95%),veh/ln	0.0	1.9	1.5	0.0	5.9	6.6
Unsig. Movement Delay, s/veh						
LnGrp Delay(d),s/veh	0.0	4.6	4.4	0.0	40.0	45.3
LnGrp LOS	A	A	A	A	D	D
Approach Vol, veh/h		847	676		491	
Approach Delay, s/veh		4.6	4.4		41.9	
Approach LOS		A	A		D	

Timer - Assigned Phs		2		4		6
Phs Duration (G+Y+Rc), s		62.7		17.3		62.7
Change Period (Y+Rc), s		5.0		5.0		5.0
Max Green Setting (Gmax), s		44.0		26.0		44.0
Max Q Clear Time (g_c+I1), s		7.2		10.8		5.9
Green Ext Time (p_c), s		5.9		1.5		4.5

Intersection Summary	
HCM 6th Ctrl Delay	13.6
HCM 6th LOS	B

Movement	EBL	EBT	WBT	WBR	SBL	SBR
Lane Configurations						
Traffic Volume (veh/h)	0	1165	1118	0	494	350
Future Volume (veh/h)	0	1165	1118	0	494	350
Initial Q (Qb), veh	0	0	0	0	0	0
Ped-Bike Adj(A_pbT)	1.00			1.00	1.00	1.00
Parking Bus, Adj	1.00	1.00	1.00	1.00	1.00	1.00
Work Zone On Approach		No	No		No	
Adj Sat Flow, veh/h/ln	0	1772	1772	0	1575	1772
Adj Flow Rate, veh/h	0	1201	1153	0	509	361
Peak Hour Factor	0.97	0.97	0.97	0.97	0.97	0.97
Percent Heavy Veh, %	0	2	2	0	2	2
Cap, veh/h	0	2792	2792	0	703	363
Arrive On Green	0.00	0.58	0.58	0.00	0.24	0.24
Sat Flow, veh/h	0	5156	5156	0	2910	1502
Grp Volume(v), veh/h	0	1201	1153	0	509	361
Grp Sat Flow(s),veh/h/ln	0	1612	1612	0	1455	1502
Q Serve(g_s), s	0.0	11.2	10.6	0.0	12.9	19.2
Cycle Q Clear(g_c), s	0.0	11.2	10.6	0.0	12.9	19.2
Prop In Lane	0.00			0.00	1.00	1.00
Lane Grp Cap(c), veh/h	0	2792	2792	0	703	363
V/C Ratio(X)	0.00	0.43	0.41	0.00	0.72	1.00
Avail Cap(c_a), veh/h	0	2792	2792	0	1128	582
HCM Platoon Ratio	1.00	1.00	1.00	1.00	1.00	1.00
Upstream Filter(I)	0.00	0.76	0.81	0.00	1.00	1.00
Uniform Delay (d), s/veh	0.0	9.5	9.4	0.0	27.9	30.3
Incr Delay (d2), s/veh	0.0	0.4	0.4	0.0	0.5	24.9
Initial Q Delay(d3),s/veh	0.0	0.0	0.0	0.0	0.0	0.0
%ile BackOfQ(95%),veh/ln	0.0	5.6	5.3	0.0	7.7	14.0
Unsig. Movement Delay, s/veh						
LnGrp Delay(d),s/veh	0.0	9.9	9.8	0.0	28.4	55.2
LnGrp LOS	A	A	A	A	C	E
Approach Vol, veh/h		1201	1153		870	
Approach Delay, s/veh		9.9	9.8		39.5	
Approach LOS		A	A		D	

Timer - Assigned Phs		2		4		6
Phs Duration (G+Y+Rc), s		53.7		26.3		53.7
Change Period (Y+Rc), s		5.5		5.0		5.5
Max Green Setting (Gmax), s		36.5		33.0		36.5
Max Q Clear Time (g_c+I1), s		13.2		21.2		12.6
Green Ext Time (p_c), s		1.4		0.1		1.3

Intersection Summary	
HCM 6th Ctrl Delay	17.8
HCM 6th LOS	B

Movement	EBL	EBT	WBT	WBR	SBL	SBR
Lane Configurations						
Traffic Volume (veh/h)	0	820	646	0	338	160
Future Volume (veh/h)	0	820	646	0	338	160
Initial Q (Qb), veh	0	0	0	0	0	0
Ped-Bike Adj(A_pbT)	1.00			1.00	1.00	1.00
Parking Bus, Adj	1.00	1.00	1.00	1.00	1.00	1.00
Work Zone On Approach		No	No		No	
Adj Sat Flow, veh/h/ln	0	1772	1772	0	1575	1772
Adj Flow Rate, veh/h	0	863	680	0	356	168
Peak Hour Factor	0.95	0.95	0.95	0.95	0.95	0.95
Percent Heavy Veh, %	0	2	2	0	2	2
Cap, veh/h	0	3313	3313	0	408	210
Arrive On Green	0.00	0.68	0.68	0.00	0.14	0.14
Sat Flow, veh/h	0	5156	5156	0	2910	1502
Grp Volume(v), veh/h	0	863	680	0	356	168
Grp Sat Flow(s),veh/h/ln	0	1612	1612	0	1455	1502
Q Serve(g_s), s	0.0	5.5	4.1	0.0	9.6	8.7
Cycle Q Clear(g_c), s	0.0	5.5	4.1	0.0	9.6	8.7
Prop In Lane	0.00			0.00	1.00	1.00
Lane Grp Cap(c), veh/h	0	3313	3313	0	408	210
V/C Ratio(X)	0.00	0.26	0.21	0.00	0.87	0.80
Avail Cap(c_a), veh/h	0	3313	3313	0	873	450
HCM Platoon Ratio	1.00	1.00	1.00	1.00	1.00	1.00
Upstream Filter(I)	0.00	0.91	0.93	0.00	1.00	1.00
Uniform Delay (d), s/veh	0.0	4.8	4.6	0.0	33.7	33.3
Incr Delay (d2), s/veh	0.0	0.2	0.1	0.0	6.0	6.8
Initial Q Delay(d3),s/veh	0.0	0.0	0.0	0.0	0.0	0.0
%ile BackOfQ(95%),veh/ln	0.0	2.1	1.6	0.0	6.4	6.2
Unsig. Movement Delay, s/veh						
LnGrp Delay(d),s/veh	0.0	5.0	4.8	0.0	39.7	40.1
LnGrp LOS	A	A	A	A	D	D
Approach Vol, veh/h		863	680		524	
Approach Delay, s/veh		5.0	4.8		39.8	
Approach LOS		A	A		D	

Timer - Assigned Phs		2		4		6
Phs Duration (G+Y+Rc), s		61.8		18.2		61.8
Change Period (Y+Rc), s		5.0		5.0		5.0
Max Green Setting (Gmax), s		44.0		26.0		44.0
Max Q Clear Time (g_c+I1), s		7.5		11.6		6.1
Green Ext Time (p_c), s		6.1		1.6		4.6

Intersection Summary	
HCM 6th Ctrl Delay	13.7
HCM 6th LOS	B

Movement	EBL	EBT	WBT	WBR	SBL	SBR
Lane Configurations						
Traffic Volume (veh/h)	0	1173	1139	0	511	350
Future Volume (veh/h)	0	1173	1139	0	511	350
Initial Q (Qb), veh	0	0	0	0	0	0
Ped-Bike Adj(A_pbT)	1.00			1.00	1.00	1.00
Parking Bus, Adj	1.00	1.00	1.00	1.00	1.00	1.00
Work Zone On Approach		No	No		No	
Adj Sat Flow, veh/h/ln	0	1772	1772	0	1575	1772
Adj Flow Rate, veh/h	0	1209	1174	0	527	361
Peak Hour Factor	0.97	0.97	0.97	0.97	0.97	0.97
Percent Heavy Veh, %	0	2	2	0	2	2
Cap, veh/h	0	2792	2792	0	703	363
Arrive On Green	0.00	0.58	0.58	0.00	0.24	0.24
Sat Flow, veh/h	0	5156	5156	0	2910	1502
Grp Volume(v), veh/h	0	1209	1174	0	527	361
Grp Sat Flow(s),veh/h/ln	0	1612	1612	0	1455	1502
Q Serve(g_s), s	0.0	11.3	10.8	0.0	13.4	19.2
Cycle Q Clear(g_c), s	0.0	11.3	10.8	0.0	13.4	19.2
Prop In Lane	0.00			0.00	1.00	1.00
Lane Grp Cap(c), veh/h	0	2792	2792	0	703	363
V/C Ratio(X)	0.00	0.43	0.42	0.00	0.75	1.00
Avail Cap(c_a), veh/h	0	2792	2792	0	1128	582
HCM Platoon Ratio	1.00	1.00	1.00	1.00	1.00	1.00
Upstream Filter(I)	0.00	0.76	0.78	0.00	1.00	1.00
Uniform Delay (d), s/veh	0.0	9.5	9.4	0.0	28.1	30.3
Incr Delay (d2), s/veh	0.0	0.4	0.4	0.0	0.6	24.9
Initial Q Delay(d3),s/veh	0.0	0.0	0.0	0.0	0.0	0.0
%ile BackOfQ(95%),veh/ln	0.0	5.6	5.4	0.0	8.0	14.0
Unsig. Movement Delay, s/veh						
LnGrp Delay(d),s/veh	0.0	9.9	9.8	0.0	28.7	55.2
LnGrp LOS	A	A	A	A	C	E
Approach Vol, veh/h		1209	1174		888	
Approach Delay, s/veh		9.9	9.8		39.5	
Approach LOS		A	A		D	

Timer - Assigned Phs		2		4		6
Phs Duration (G+Y+Rc), s		53.7		26.3		53.7
Change Period (Y+Rc), s		5.5		5.0		5.5
Max Green Setting (Gmax), s		36.5		33.0		36.5
Max Q Clear Time (g_c+I1), s		13.3		21.2		12.8
Green Ext Time (p_c), s		1.4		0.1		1.3

Intersection Summary	
HCM 6th Ctrl Delay	17.9
HCM 6th LOS	B

Movement	EBL	EBT	WBT	WBR	SBL	SBR
Lane Configurations						
Traffic Volume (veh/h)	0	943	788	0	377	195
Future Volume (veh/h)	0	943	788	0	377	195
Initial Q (Qb), veh	0	0	0	0	0	0
Ped-Bike Adj(A_pbT)	1.00			1.00	1.00	1.00
Parking Bus, Adj	1.00	1.00	1.00	1.00	1.00	1.00
Work Zone On Approach		No	No		No	
Adj Sat Flow, veh/h/ln	0	1772	1772	0	1575	1772
Adj Flow Rate, veh/h	0	993	829	0	397	205
Peak Hour Factor	0.95	0.95	0.95	0.95	0.95	0.95
Percent Heavy Veh, %	0	2	2	0	2	2
Cap, veh/h	0	3234	3234	0	455	235
Arrive On Green	0.00	0.67	0.67	0.00	0.16	0.16
Sat Flow, veh/h	0	5156	5156	0	2910	1502
Grp Volume(v), veh/h	0	993	829	0	397	205
Grp Sat Flow(s),veh/h/ln	0	1612	1612	0	1455	1502
Q Serve(g_s), s	0.0	6.8	5.5	0.0	10.7	10.7
Cycle Q Clear(g_c), s	0.0	6.8	5.5	0.0	10.7	10.7
Prop In Lane	0.00			0.00	1.00	1.00
Lane Grp Cap(c), veh/h	0	3234	3234	0	455	235
V/C Ratio(X)	0.00	0.31	0.26	0.00	0.87	0.87
Avail Cap(c_a), veh/h	0	3234	3234	0	873	450
HCM Platoon Ratio	1.00	1.00	1.00	1.00	1.00	1.00
Upstream Filter(I)	0.00	0.87	0.86	0.00	1.00	1.00
Uniform Delay (d), s/veh	0.0	5.5	5.3	0.0	33.0	33.0
Incr Delay (d2), s/veh	0.0	0.2	0.2	0.0	5.3	9.7
Initial Q Delay(d3),s/veh	0.0	0.0	0.0	0.0	0.0	0.0
%ile BackOfQ(95%),veh/ln	0.0	2.8	2.2	0.0	7.1	7.8
Unsig. Movement Delay, s/veh						
LnGrp Delay(d),s/veh	0.0	5.7	5.5	0.0	38.3	42.7
LnGrp LOS	A	A	A	A	D	D
Approach Vol, veh/h		993	829		602	
Approach Delay, s/veh		5.7	5.5		39.8	
Approach LOS		A	A		D	

Timer - Assigned Phs		2		4		6
Phs Duration (G+Y+Rc), s		60.5		19.5		60.5
Change Period (Y+Rc), s		5.0		5.0		5.0
Max Green Setting (Gmax), s		44.0		26.0		44.0
Max Q Clear Time (g_c+I1), s		8.8		12.7		7.5
Green Ext Time (p_c), s		7.2		1.8		5.8

Intersection Summary	
HCM 6th Ctrl Delay	14.1
HCM 6th LOS	B

Movement	EBL	EBT	WBT	WBR	SBL	SBR
Lane Configurations						
Traffic Volume (veh/h)	0	1367	1313	0	672	401
Future Volume (veh/h)	0	1367	1313	0	672	401
Initial Q (Qb), veh	0	0	0	0	0	0
Ped-Bike Adj(A_pbT)	1.00			1.00	1.00	1.00
Parking Bus, Adj	1.00	1.00	1.00	1.00	1.00	1.00
Work Zone On Approach		No	No		No	
Adj Sat Flow, veh/h/ln	0	1772	1772	0	1575	1772
Adj Flow Rate, veh/h	0	1409	1354	0	693	413
Peak Hour Factor	0.97	0.97	0.97	0.97	0.97	0.97
Percent Heavy Veh, %	0	2	2	0	2	2
Cap, veh/h	0	2624	2624	0	804	415
Arrive On Green	0.00	0.54	0.54	0.00	0.28	0.28
Sat Flow, veh/h	0	5156	5156	0	2910	1502
Grp Volume(v), veh/h	0	1409	1354	0	693	413
Grp Sat Flow(s),veh/h/ln	0	1612	1612	0	1455	1502
Q Serve(g_s), s	0.0	15.0	14.2	0.0	18.1	22.0
Cycle Q Clear(g_c), s	0.0	15.0	14.2	0.0	18.1	22.0
Prop In Lane	0.00			0.00	1.00	1.00
Lane Grp Cap(c), veh/h	0	2624	2624	0	804	415
V/C Ratio(X)	0.00	0.54	0.52	0.00	0.86	1.00
Avail Cap(c_a), veh/h	0	2624	2624	0	1128	582
HCM Platoon Ratio	1.00	1.00	1.00	1.00	1.00	1.00
Upstream Filter(I)	0.00	0.61	0.56	0.00	1.00	1.00
Uniform Delay (d), s/veh	0.0	11.8	11.6	0.0	27.5	28.9
Incr Delay (d2), s/veh	0.0	0.5	0.4	0.0	3.8	29.0
Initial Q Delay(d3),s/veh	0.0	0.0	0.0	0.0	0.0	0.0
%ile BackOfQ(95%),veh/ln	0.0	7.0	6.6	0.0	10.4	16.1
Unsig. Movement Delay, s/veh						
LnGrp Delay(d),s/veh	0.0	12.3	12.0	0.0	31.3	57.9
LnGrp LOS	A	B	B	A	C	E
Approach Vol, veh/h		1409	1354		1106	
Approach Delay, s/veh		12.3	12.0		41.2	
Approach LOS		B	B		D	

Timer - Assigned Phs		2		4		6
Phs Duration (G+Y+Rc), s		50.9		29.1		50.9
Change Period (Y+Rc), s		5.5		5.0		5.5
Max Green Setting (Gmax), s		36.5		33.0		36.5
Max Q Clear Time (g_c+I1), s		17.0		24.0		16.2
Green Ext Time (p_c), s		1.6		0.1		1.6

Intersection Summary	
HCM 6th Ctrl Delay	20.5
HCM 6th LOS	C

Movement	EBL	EBT	WBT	WBR	SBL	SBR
Lane Configurations						
Traffic Volume (veh/h)	0	958	792	0	408	195
Future Volume (veh/h)	0	958	792	0	408	195
Initial Q (Qb), veh	0	0	0	0	0	0
Ped-Bike Adj(A_pbT)	1.00			1.00	1.00	1.00
Parking Bus, Adj	1.00	1.00	1.00	1.00	1.00	1.00
Work Zone On Approach		No	No		No	
Adj Sat Flow, veh/h/ln	0	1772	1772	0	1575	1772
Adj Flow Rate, veh/h	0	1008	834	0	429	205
Peak Hour Factor	0.95	0.95	0.95	0.95	0.95	0.95
Percent Heavy Veh, %	0	2	2	0	2	2
Cap, veh/h	0	3179	3179	0	488	252
Arrive On Green	0.00	0.66	0.66	0.00	0.17	0.17
Sat Flow, veh/h	0	5156	5156	0	2910	1502
Grp Volume(v), veh/h	0	1008	834	0	429	205
Grp Sat Flow(s),veh/h/ln	0	1612	1612	0	1455	1502
Q Serve(g_s), s	0.0	7.2	5.7	0.0	11.5	10.5
Cycle Q Clear(g_c), s	0.0	7.2	5.7	0.0	11.5	10.5
Prop In Lane	0.00			0.00	1.00	1.00
Lane Grp Cap(c), veh/h	0	3179	3179	0	488	252
V/C Ratio(X)	0.00	0.32	0.26	0.00	0.88	0.81
Avail Cap(c_a), veh/h	0	3179	3179	0	873	450
HCM Platoon Ratio	1.00	1.00	1.00	1.00	1.00	1.00
Upstream Filter(I)	0.00	0.87	0.86	0.00	1.00	1.00
Uniform Delay (d), s/veh	0.0	5.9	5.7	0.0	32.5	32.1
Incr Delay (d2), s/veh	0.0	0.2	0.2	0.0	5.3	6.3
Initial Q Delay(d3),s/veh	0.0	0.0	0.0	0.0	0.0	0.0
%ile BackOfQ(95%),veh/ln	0.0	3.0	2.4	0.0	7.6	7.4
Unsig. Movement Delay, s/veh						
LnGrp Delay(d),s/veh	0.0	6.2	5.9	0.0	37.8	38.4
LnGrp LOS	A	A	A	A	D	D
Approach Vol, veh/h		1008	834		634	
Approach Delay, s/veh		6.2	5.9		37.9	
Approach LOS		A	A		D	

Timer - Assigned Phs		2		4		6
Phs Duration (G+Y+Rc), s		59.6		20.4		59.6
Change Period (Y+Rc), s		5.0		5.0		5.0
Max Green Setting (Gmax), s		44.0		26.0		44.0
Max Q Clear Time (g_c+I1), s		9.2		13.5		7.7
Green Ext Time (p_c), s		7.3		1.9		5.8

Intersection Summary	
HCM 6th Ctrl Delay	14.2
HCM 6th LOS	B

Movement	EBL	EBT	WBT	WBR	SBL	SBR
Lane Configurations						
Traffic Volume (veh/h)	0	1375	1334	0	689	401
Future Volume (veh/h)	0	1375	1334	0	689	401
Initial Q (Qb), veh	0	0	0	0	0	0
Ped-Bike Adj(A_pbT)	1.00			1.00	1.00	1.00
Parking Bus, Adj	1.00	1.00	1.00	1.00	1.00	1.00
Work Zone On Approach		No	No		No	
Adj Sat Flow, veh/h/ln	0	1772	1772	0	1575	1772
Adj Flow Rate, veh/h	0	1418	1375	0	710	413
Peak Hour Factor	0.97	0.97	0.97	0.97	0.97	0.97
Percent Heavy Veh, %	0	2	2	0	2	2
Cap, veh/h	0	2624	2624	0	804	415
Arrive On Green	0.00	0.54	0.54	0.00	0.28	0.28
Sat Flow, veh/h	0	5156	5156	0	2910	1502
Grp Volume(v), veh/h	0	1418	1375	0	710	413
Grp Sat Flow(s),veh/h/ln	0	1612	1612	0	1455	1502
Q Serve(g_s), s	0.0	15.2	14.5	0.0	18.7	22.0
Cycle Q Clear(g_c), s	0.0	15.2	14.5	0.0	18.7	22.0
Prop In Lane	0.00			0.00	1.00	1.00
Lane Grp Cap(c), veh/h	0	2624	2624	0	804	415
V/C Ratio(X)	0.00	0.54	0.52	0.00	0.88	1.00
Avail Cap(c_a), veh/h	0	2624	2624	0	1128	582
HCM Platoon Ratio	1.00	1.00	1.00	1.00	1.00	1.00
Upstream Filter(I)	0.00	0.61	0.52	0.00	1.00	1.00
Uniform Delay (d), s/veh	0.0	11.9	11.7	0.0	27.7	28.9
Incr Delay (d2), s/veh	0.0	0.5	0.4	0.0	4.9	29.0
Initial Q Delay(d3),s/veh	0.0	0.0	0.0	0.0	0.0	0.0
%ile BackOfQ(95%),veh/ln	0.0	7.1	6.6	0.0	10.9	16.1
Unsig. Movement Delay, s/veh						
LnGrp Delay(d),s/veh	0.0	12.3	12.1	0.0	32.6	57.9
LnGrp LOS	A	B	B	A	C	E
Approach Vol, veh/h		1418	1375		1123	
Approach Delay, s/veh		12.3	12.1		41.9	
Approach LOS		B	B		D	

Timer - Assigned Phs		2		4		6
Phs Duration (G+Y+Rc), s		50.9		29.1		50.9
Change Period (Y+Rc), s		5.5		5.0		5.5
Max Green Setting (Gmax), s		36.5		33.0		36.5
Max Q Clear Time (g_c+I1), s		17.2		24.0		16.5
Green Ext Time (p_c), s		1.7		0.2		1.6

Intersection Summary	
HCM 6th Ctrl Delay	20.7
HCM 6th LOS	C

Movement	EBL	EBT	EBR	WBL	WBT	WBR	NBL	NBT	NBR	SBL	SBT	SBR
Lane Configurations												
Traffic Volume (veh/h)	0	856	0	0	1288	501	57	0	335	0	0	0
Future Volume (veh/h)	0	856	0	0	1288	501	57	0	335	0	0	0
Initial Q (Qb), veh	0	0	0	0	0	0	0	0	0			
Ped-Bike Adj(A_pbT)	1.00		1.00	1.00		1.00	1.00		1.00			
Parking Bus, Adj	1.00	1.00	1.00	1.00	1.00	1.00	1.00	1.00	1.00			
Work Zone On Approach		No			No			No				
Adj Sat Flow, veh/h/ln	0	1772	0	0	1772	1772	1673	1772	1772			
Adj Flow Rate, veh/h	0	901	0	0	1356	527	60	0	353			
Peak Hour Factor	0.95	0.95	0.95	0.95	0.95	0.95	0.95	0.95	0.95			
Percent Heavy Veh, %	0	2	0	0	2	2	2	2	2			
Cap, veh/h	0	3469	0	0	3469	1077	203	0	382			
Arrive On Green	0.00	0.72	0.00	0.00	0.72	0.72	0.13	0.00	0.13			
Sat Flow, veh/h	0	5156	0	0	4997	1502	1594	0	3003			
Grp Volume(v), veh/h	0	901	0	0	1356	527	60	0	353			
Grp Sat Flow(s),veh/h/ln	0	1612	0	0	1612	1502	1594	0	1502			
Q Serve(g_s), s	0.0	5.8	0.0	0.0	9.9	13.8	3.1	0.0	10.5			
Cycle Q Clear(g_c), s	0.0	5.8	0.0	0.0	9.9	13.8	3.1	0.0	10.5			
Prop In Lane	0.00		0.00	0.00		1.00	1.00		1.00			
Lane Grp Cap(c), veh/h	0	3469	0	0	3469	1077	203	0	382			
V/C Ratio(X)	0.00	0.26	0.00	0.00	0.39	0.49	0.30	0.00	0.92			
Avail Cap(c_a), veh/h	0	3469	0	0	3469	1077	319	0	601			
HCM Platoon Ratio	1.00	1.00	1.00	1.00	1.00	1.00	1.00	1.00	1.00			
Upstream Filter(I)	0.00	0.93	0.00	0.00	0.89	0.89	1.00	0.00	1.00			
Uniform Delay (d), s/veh	0.0	4.4	0.0	0.0	5.0	5.5	35.6	0.0	38.8			
Incr Delay (d2), s/veh	0.0	0.2	0.0	0.0	0.3	1.4	0.8	0.0	14.3			
Initial Q Delay(d3),s/veh	0.0	0.0	0.0	0.0	0.0	0.0	0.0	0.0	0.0			
%ile BackOfQ(95%),veh/ln	0.0	2.3	0.0	0.0	3.9	5.6	2.2	0.0	8.0			
Unsig. Movement Delay, s/veh												
LnGrp Delay(d),s/veh	0.0	4.6	0.0	0.0	5.3	7.0	36.4	0.0	53.1			
LnGrp LOS	A	A	A	A	A	A	D	A	D			
Approach Vol, veh/h		901			1883			413				
Approach Delay, s/veh		4.6			5.8			50.7				
Approach LOS		A			A			D				

Timer - Assigned Phs		2				6		8				
Phs Duration (G+Y+Rc), s		71.5				71.5		18.5				
Change Period (Y+Rc), s		5.0				5.0		5.0				
Max Green Setting (Gmax), s		60.0				60.0		20.0				
Max Q Clear Time (g_c+I1), s		7.8				15.8		12.5				
Green Ext Time (p_c), s		6.6				15.6		1.0				

Intersection Summary	
HCM 6th Ctrl Delay	11.2
HCM 6th LOS	B

Notes

User approved volume balancing among the lanes for turning movement.

Movement	EBL	EBT	EBR	WBL	WBT	WBR	NBL	NBT	NBR	SBL	SBT	SBR
Lane Configurations												
Traffic Volume (veh/h)	0	1396	0	0	1265	411	245	1	949	0	0	0
Future Volume (veh/h)	0	1396	0	0	1265	411	245	1	949	0	0	0
Initial Q (Qb), veh	0	0	0	0	0	0	0	0	0			
Ped-Bike Adj(A_pbT)	1.00		1.00	1.00		1.00	1.00		1.00			
Parking Bus, Adj	1.00	1.00	1.00	1.00	1.00	1.00	1.00	1.00	1.00			
Work Zone On Approach		No			No			No				
Adj Sat Flow, veh/h/ln	0	1772	0	0	1772	1772	1673	1772	1772			
Adj Flow Rate, veh/h	0	1439	0	0	1304	424	253	0	979			
Peak Hour Factor	0.97	0.97	0.97	0.97	0.97	0.97	0.97	0.97	0.97			
Percent Heavy Veh, %	0	2	0	0	2	2	2	2	2			
Cap, veh/h	0	2366	0	0	2366	735	566	0	1067			
Arrive On Green	0.00	0.49	0.00	0.00	0.49	0.49	0.36	0.00	0.36			
Sat Flow, veh/h	0	5156	0	0	4997	1502	1594	0	3003			
Grp Volume(v), veh/h	0	1439	0	0	1304	424	253	0	979			
Grp Sat Flow(s),veh/h/ln	0	1612	0	0	1612	1502	1594	0	1502			
Q Serve(g_s), s	0.0	19.5	0.0	0.0	17.0	18.1	10.9	0.0	28.1			
Cycle Q Clear(g_c), s	0.0	19.5	0.0	0.0	17.0	18.1	10.9	0.0	28.1			
Prop In Lane	0.00		0.00	0.00		1.00	1.00		1.00			
Lane Grp Cap(c), veh/h	0	2366	0	0	2366	735	566	0	1067			
V/C Ratio(X)	0.00	0.61	0.00	0.00	0.55	0.58	0.45	0.00	0.92			
Avail Cap(c_a), veh/h	0	2366	0	0	2366	735	673	0	1268			
HCM Platoon Ratio	1.00	1.00	1.00	1.00	1.00	1.00	1.00	1.00	1.00			
Upstream Filter(I)	0.00	0.84	0.00	0.00	0.78	0.78	1.00	0.00	1.00			
Uniform Delay (d), s/veh	0.0	16.7	0.0	0.0	16.1	16.4	22.2	0.0	27.8			
Incr Delay (d2), s/veh	0.0	1.0	0.0	0.0	0.7	2.6	0.6	0.0	9.6			
Initial Q Delay(d3),s/veh	0.0	0.0	0.0	0.0	0.0	0.0	0.0	0.0	0.0			
%ile BackOfQ(95%),veh/ln	0.0	10.1	0.0	0.0	8.9	9.3	7.2	0.0	16.3			
Unsig. Movement Delay, s/veh												
LnGrp Delay(d),s/veh	0.0	17.7	0.0	0.0	16.8	18.9	22.8	0.0	37.4			
LnGrp LOS	A	B	A	A	B	B	C	A	D			
Approach Vol, veh/h		1439			1728			1232				
Approach Delay, s/veh		17.7			17.3			34.4				
Approach LOS		B			B			C				

Timer - Assigned Phs		2				6		8				
Phs Duration (G+Y+Rc), s		51.0				51.0		39.0				
Change Period (Y+Rc), s		5.0				5.0		5.0				
Max Green Setting (Gmax), s		40.0				40.0		40.0				
Max Q Clear Time (g_c+I1), s		21.5				20.1		30.1				
Green Ext Time (p_c), s		9.1				10.1		3.9				

Intersection Summary	
HCM 6th Ctrl Delay	22.2
HCM 6th LOS	C

Notes

User approved volume balancing among the lanes for turning movement.

Movement	EBL	EBT	EBR	WBL	WBT	WBR	NBL	NBT	NBR	SBL	SBT	SBR
Lane Configurations												
Traffic Volume (veh/h)	0	902	0	0	1301	509	57	0	366	0	0	0
Future Volume (veh/h)	0	902	0	0	1301	509	57	0	366	0	0	0
Initial Q (Qb), veh	0	0	0	0	0	0	0	0	0			
Ped-Bike Adj(A_pbT)	1.00		1.00	1.00		1.00	1.00		1.00			
Parking Bus, Adj	1.00	1.00	1.00	1.00	1.00	1.00	1.00	1.00	1.00			
Work Zone On Approach		No			No			No				
Adj Sat Flow, veh/h/ln	0	1772	0	0	1772	1772	1673	1772	1772			
Adj Flow Rate, veh/h	0	949	0	0	1369	536	60	0	385			
Peak Hour Factor	0.95	0.95	0.95	0.95	0.95	0.95	0.95	0.95	0.95			
Percent Heavy Veh, %	0	2	0	0	2	2	2	2	2			
Cap, veh/h	0	3418	0	0	3418	1061	220	0	414			
Arrive On Green	0.00	0.71	0.00	0.00	0.71	0.71	0.14	0.00	0.14			
Sat Flow, veh/h	0	5156	0	0	4997	1502	1594	0	3003			
Grp Volume(v), veh/h	0	949	0	0	1369	536	60	0	385			
Grp Sat Flow(s),veh/h/ln	0	1612	0	0	1612	1502	1594	0	1502			
Q Serve(g_s), s	0.0	6.4	0.0	0.0	10.4	14.7	3.0	0.0	11.4			
Cycle Q Clear(g_c), s	0.0	6.4	0.0	0.0	10.4	14.7	3.0	0.0	11.4			
Prop In Lane	0.00		0.00	0.00		1.00	1.00		1.00			
Lane Grp Cap(c), veh/h	0	3418	0	0	3418	1061	220	0	414			
V/C Ratio(X)	0.00	0.28	0.00	0.00	0.40	0.51	0.27	0.00	0.93			
Avail Cap(c_a), veh/h	0	3418	0	0	3418	1061	319	0	601			
HCM Platoon Ratio	1.00	1.00	1.00	1.00	1.00	1.00	1.00	1.00	1.00			
Upstream Filter(I)	0.00	0.92	0.00	0.00	0.89	0.89	1.00	0.00	1.00			
Uniform Delay (d), s/veh	0.0	4.8	0.0	0.0	5.4	6.0	34.8	0.0	38.4			
Incr Delay (d2), s/veh	0.0	0.2	0.0	0.0	0.3	1.5	0.7	0.0	16.5			
Initial Q Delay(d3),s/veh	0.0	0.0	0.0	0.0	0.0	0.0	0.0	0.0	0.0			
%ile BackOfQ(95%),veh/ln	0.0	2.6	0.0	0.0	4.3	6.1	2.1	0.0	8.7			
Unsig. Movement Delay, s/veh												
LnGrp Delay(d),s/veh	0.0	5.0	0.0	0.0	5.7	7.6	35.4	0.0	54.9			
LnGrp LOS	A	A	A	A	A	A	D	A	D			
Approach Vol, veh/h		949			1905			445				
Approach Delay, s/veh		5.0			6.2			52.3				
Approach LOS		A			A			D				

Timer - Assigned Phs		2				6		8				
Phs Duration (G+Y+Rc), s		70.6				70.6		19.4				
Change Period (Y+Rc), s		5.0				5.0		5.0				
Max Green Setting (Gmax), s		60.0				60.0		20.0				
Max Q Clear Time (g_c+I1), s		8.4				16.7		13.4				
Green Ext Time (p_c), s		7.1				15.7		1.0				

Intersection Summary	
HCM 6th Ctrl Delay	12.1
HCM 6th LOS	B

Notes

User approved volume balancing among the lanes for turning movement.

Movement	EBL	EBT	EBR	WBL	WBT	WBR	NBL	NBT	NBR	SBL	SBT	SBR
Lane Configurations												
Traffic Volume (veh/h)	0	1421	0	0	1328	453	245	1	966	0	0	0
Future Volume (veh/h)	0	1421	0	0	1328	453	245	1	966	0	0	0
Initial Q (Qb), veh	0	0	0	0	0	0	0	0	0			
Ped-Bike Adj(A_pbT)	1.00		1.00	1.00		1.00	1.00		1.00			
Parking Bus, Adj	1.00	1.00	1.00	1.00	1.00	1.00	1.00	1.00	1.00			
Work Zone On Approach		No			No			No				
Adj Sat Flow, veh/h/ln	0	1772	0	0	1772	1772	1673	1772	1772			
Adj Flow Rate, veh/h	0	1465	0	0	1369	467	253	0	997			
Peak Hour Factor	0.97	0.97	0.97	0.97	0.97	0.97	0.97	0.97	0.97			
Percent Heavy Veh, %	0	2	0	0	2	2	2	2	2			
Cap, veh/h	0	2341	0	0	2341	727	575	0	1083			
Arrive On Green	0.00	0.48	0.00	0.00	0.48	0.48	0.36	0.00	0.36			
Sat Flow, veh/h	0	5156	0	0	4997	1502	1594	0	3003			
Grp Volume(v), veh/h	0	1465	0	0	1369	467	253	0	997			
Grp Sat Flow(s),veh/h/ln	0	1612	0	0	1612	1502	1594	0	1502			
Q Serve(g_s), s	0.0	20.2	0.0	0.0	18.3	21.0	10.9	0.0	28.6			
Cycle Q Clear(g_c), s	0.0	20.2	0.0	0.0	18.3	21.0	10.9	0.0	28.6			
Prop In Lane	0.00		0.00	0.00		1.00	1.00		1.00			
Lane Grp Cap(c), veh/h	0	2341	0	0	2341	727	575	0	1083			
V/C Ratio(X)	0.00	0.63	0.00	0.00	0.58	0.64	0.44	0.00	0.92			
Avail Cap(c_a), veh/h	0	2341	0	0	2341	727	673	0	1268			
HCM Platoon Ratio	1.00	1.00	1.00	1.00	1.00	1.00	1.00	1.00	1.00			
Upstream Filter(I)	0.00	0.83	0.00	0.00	0.74	0.74	1.00	0.00	1.00			
Uniform Delay (d), s/veh	0.0	17.2	0.0	0.0	16.7	17.4	21.9	0.0	27.5			
Incr Delay (d2), s/veh	0.0	1.1	0.0	0.0	0.8	3.2	0.5	0.0	10.0			
Initial Q Delay(d3),s/veh	0.0	0.0	0.0	0.0	0.0	0.0	0.0	0.0	0.0			
%ile BackOfQ(95%),veh/ln	0.0	10.5	0.0	0.0	9.4	10.5	7.1	0.0	16.6			
Unsig. Movement Delay, s/veh												
LnGrp Delay(d),s/veh	0.0	18.3	0.0	0.0	17.5	20.6	22.4	0.0	37.6			
LnGrp LOS	A	B	A	A	B	C	C	A	D			
Approach Vol, veh/h		1465			1836			1250				
Approach Delay, s/veh		18.3			18.3			34.5				
Approach LOS		B			B			C				

Timer - Assigned Phs		2				6		8				
Phs Duration (G+Y+Rc), s		50.6				50.6		39.4				
Change Period (Y+Rc), s		5.0				5.0		5.0				
Max Green Setting (Gmax), s		40.0				40.0		40.0				
Max Q Clear Time (g_c+I1), s		22.2				23.0		30.6				
Green Ext Time (p_c), s		9.1				9.8		3.8				

Intersection Summary	
HCM 6th Ctrl Delay	22.7
HCM 6th LOS	C

Notes

User approved volume balancing among the lanes for turning movement.

Movement	EBL	EBT	EBR	WBL	WBT	WBR	NBL	NBT	NBR	SBL	SBT	SBR
Lane Configurations												
Traffic Volume (veh/h)	0	1021	0	0	1607	650	88	0	445	0	0	0
Future Volume (veh/h)	0	1021	0	0	1607	650	88	0	445	0	0	0
Initial Q (Qb), veh	0	0	0	0	0	0	0	0	0			
Ped-Bike Adj(A_pbT)	1.00		1.00	1.00		1.00	1.00		1.00			
Parking Bus, Adj	1.00	1.00	1.00	1.00	1.00	1.00	1.00	1.00	1.00			
Work Zone On Approach		No			No			No				
Adj Sat Flow, veh/h/ln	0	1772	0	0	1772	1772	1673	1772	1772			
Adj Flow Rate, veh/h	0	1075	0	0	1692	684	93	0	468			
Peak Hour Factor	0.95	0.95	0.95	0.95	0.95	0.95	0.95	0.95	0.95			
Percent Heavy Veh, %	0	2	0	0	2	2	2	2	2			
Cap, veh/h	0	3289	0	0	3289	1021	262	0	494			
Arrive On Green	0.00	0.68	0.00	0.00	0.68	0.68	0.16	0.00	0.16			
Sat Flow, veh/h	0	5156	0	0	4997	1502	1594	0	3003			
Grp Volume(v), veh/h	0	1075	0	0	1692	684	93	0	468			
Grp Sat Flow(s),veh/h/ln	0	1612	0	0	1612	1502	1594	0	1502			
Q Serve(g_s), s	0.0	8.2	0.0	0.0	15.5	24.1	4.7	0.0	13.9			
Cycle Q Clear(g_c), s	0.0	8.2	0.0	0.0	15.5	24.1	4.7	0.0	13.9			
Prop In Lane	0.00		0.00	0.00		1.00	1.00		1.00			
Lane Grp Cap(c), veh/h	0	3289	0	0	3289	1021	262	0	494			
V/C Ratio(X)	0.00	0.33	0.00	0.00	0.51	0.67	0.35	0.00	0.95			
Avail Cap(c_a), veh/h	0	3289	0	0	3289	1021	319	0	601			
HCM Platoon Ratio	1.00	1.00	1.00	1.00	1.00	1.00	1.00	1.00	1.00			
Upstream Filter(I)	0.00	0.90	0.00	0.00	0.78	0.78	1.00	0.00	1.00			
Uniform Delay (d), s/veh	0.0	5.9	0.0	0.0	7.1	8.5	33.4	0.0	37.2			
Incr Delay (d2), s/veh	0.0	0.2	0.0	0.0	0.5	2.7	0.8	0.0	22.1			
Initial Q Delay(d3),s/veh	0.0	0.0	0.0	0.0	0.0	0.0	0.0	0.0	0.0			
%ile BackOfQ(95%),veh/ln	0.0	3.6	0.0	0.0	6.6	9.6	3.3	0.0	10.6			
Unsig. Movement Delay, s/veh												
LnGrp Delay(d),s/veh	0.0	6.2	0.0	0.0	7.5	11.2	34.2	0.0	59.3			
LnGrp LOS	A	A	A	A	A	B	C	A	E			
Approach Vol, veh/h		1075			2376			561				
Approach Delay, s/veh		6.2			8.6			55.1				
Approach LOS		A			A			E				

Timer - Assigned Phs		2				6		8				
Phs Duration (G+Y+Rc), s		68.2				68.2		21.8				
Change Period (Y+Rc), s		5.0				5.0		5.0				
Max Green Setting (Gmax), s		60.0				60.0		20.0				
Max Q Clear Time (g_c+I1), s		10.2				26.1		15.9				
Green Ext Time (p_c), s		8.4				19.7		0.9				

Intersection Summary												
HCM 6th Ctrl Delay			14.5									
HCM 6th LOS			B									

Notes

User approved volume balancing among the lanes for turning movement.

Movement	EBL	EBT	EBR	WBL	WBT	WBR	NBL	NBT	NBR	SBL	SBT	SBR
Lane Configurations												
Traffic Volume (veh/h)	0	1736	0	0	1595	535	292	1	1200	0	0	0
Future Volume (veh/h)	0	1736	0	0	1595	535	292	1	1200	0	0	0
Initial Q (Qb), veh	0	0	0	0	0	0	0	0	0			
Ped-Bike Adj(A_pbT)	1.00		1.00	1.00		1.00	1.00		1.00			
Parking Bus, Adj	1.00	1.00	1.00	1.00	1.00	1.00	1.00	1.00	1.00			
Work Zone On Approach		No			No			No				
Adj Sat Flow, veh/h/ln	0	1772	0	0	1772	1772	1673	1772	1772			
Adj Flow Rate, veh/h	0	1790	0	0	1644	552	301	0	1238			
Peak Hour Factor	0.97	0.97	0.97	0.97	0.97	0.97	0.97	0.97	0.97			
Percent Heavy Veh, %	0	2	0	0	2	2	2	2	2			
Cap, veh/h	0	2063	0	0	2063	640	666	0	1255			
Arrive On Green	0.00	0.43	0.00	0.00	0.43	0.43	0.42	0.00	0.42			
Sat Flow, veh/h	0	5156	0	0	4997	1502	1594	0	3003			
Grp Volume(v), veh/h	0	1790	0	0	1644	552	301	0	1238			
Grp Sat Flow(s),veh/h/ln	0	1612	0	0	1612	1502	1594	0	1502			
Q Serve(g_s), s	0.0	30.3	0.0	0.0	26.6	30.0	12.2	0.0	36.7			
Cycle Q Clear(g_c), s	0.0	30.3	0.0	0.0	26.6	30.0	12.2	0.0	36.7			
Prop In Lane	0.00		0.00	0.00		1.00	1.00		1.00			
Lane Grp Cap(c), veh/h	0	2063	0	0	2063	640	666	0	1255			
V/C Ratio(X)	0.00	0.87	0.00	0.00	0.80	0.86	0.45	0.00	0.99			
Avail Cap(c_a), veh/h	0	2063	0	0	2063	640	673	0	1268			
HCM Platoon Ratio	1.00	1.00	1.00	1.00	1.00	1.00	1.00	1.00	1.00			
Upstream Filter(I)	0.00	0.72	0.00	0.00	0.36	0.36	1.00	0.00	1.00			
Uniform Delay (d), s/veh	0.0	23.5	0.0	0.0	22.4	23.4	18.8	0.0	25.9			
Incr Delay (d2), s/veh	0.0	3.9	0.0	0.0	1.2	5.8	0.5	0.0	21.8			
Initial Q Delay(d3),s/veh	0.0	0.0	0.0	0.0	0.0	0.0	0.0	0.0	0.0			
%ile BackOfQ(95%),veh/ln	0.0	15.3	0.0	0.0	12.0	13.4	7.7	0.0	22.4			
Unsig. Movement Delay, s/veh												
LnGrp Delay(d),s/veh	0.0	27.4	0.0	0.0	23.6	29.2	19.3	0.0	47.8			
LnGrp LOS	A	C	A	A	C	C	B	A	D			
Approach Vol, veh/h		1790			2196			1539				
Approach Delay, s/veh		27.4			25.0			42.2				
Approach LOS		C			C			D				

Timer - Assigned Phs		2				6		8				
Phs Duration (G+Y+Rc), s		45.4				45.4		44.6				
Change Period (Y+Rc), s		5.0				5.0		5.0				
Max Green Setting (Gmax), s		40.0				40.0		40.0				
Max Q Clear Time (g_c+I1), s		32.3				32.0		38.7				
Green Ext Time (p_c), s		5.8				6.4		0.9				

Intersection Summary			
HCM 6th Ctrl Delay			30.6
HCM 6th LOS			C

Notes

User approved volume balancing among the lanes for turning movement.

Movement	EBL	EBT	EBR	WBL	WBT	WBR	NBL	NBT	NBR	SBL	SBT	SBR
Lane Configurations												
Traffic Volume (veh/h)	0	1067	0	0	1620	658	88	0	476	0	0	0
Future Volume (veh/h)	0	1067	0	0	1620	658	88	0	476	0	0	0
Initial Q (Qb), veh	0	0	0	0	0	0	0	0	0			
Ped-Bike Adj(A_pbT)	1.00		1.00	1.00		1.00	1.00		1.00			
Parking Bus, Adj	1.00	1.00	1.00	1.00	1.00	1.00	1.00	1.00	1.00			
Work Zone On Approach		No			No			No				
Adj Sat Flow, veh/h/ln	0	1772	0	0	1772	1772	1673	1772	1772			
Adj Flow Rate, veh/h	0	1123	0	0	1705	693	93	0	501			
Peak Hour Factor	0.95	0.95	0.95	0.95	0.95	0.95	0.95	0.95	0.95			
Percent Heavy Veh, %	0	2	0	0	2	2	2	2	2			
Cap, veh/h	0	3242	0	0	3242	1006	278	0	523			
Arrive On Green	0.00	0.67	0.00	0.00	0.67	0.67	0.17	0.00	0.17			
Sat Flow, veh/h	0	5156	0	0	4997	1502	1594	0	3003			
Grp Volume(v), veh/h	0	1123	0	0	1705	693	93	0	501			
Grp Sat Flow(s),veh/h/ln	0	1612	0	0	1612	1502	1594	0	1502			
Q Serve(g_s), s	0.0	9.0	0.0	0.0	16.2	25.4	4.6	0.0	14.9			
Cycle Q Clear(g_c), s	0.0	9.0	0.0	0.0	16.2	25.4	4.6	0.0	14.9			
Prop In Lane	0.00		0.00	0.00		1.00	1.00		1.00			
Lane Grp Cap(c), veh/h	0	3242	0	0	3242	1006	278	0	523			
V/C Ratio(X)	0.00	0.35	0.00	0.00	0.53	0.69	0.33	0.00	0.96			
Avail Cap(c_a), veh/h	0	3242	0	0	3242	1006	319	0	601			
HCM Platoon Ratio	1.00	1.00	1.00	1.00	1.00	1.00	1.00	1.00	1.00			
Upstream Filter(I)	0.00	0.89	0.00	0.00	0.78	0.78	1.00	0.00	1.00			
Uniform Delay (d), s/veh	0.0	6.4	0.0	0.0	7.6	9.1	32.6	0.0	36.8			
Incr Delay (d2), s/veh	0.0	0.3	0.0	0.0	0.5	3.0	0.7	0.0	24.9			
Initial Q Delay(d3),s/veh	0.0	0.0	0.0	0.0	0.0	0.0	0.0	0.0	0.0			
%ile BackOfQ(95%),veh/ln	0.0	4.0	0.0	0.0	7.0	10.3	3.2	0.0	11.4			
Unsig. Movement Delay, s/veh												
LnGrp Delay(d),s/veh	0.0	6.6	0.0	0.0	8.0	12.1	33.3	0.0	61.7			
LnGrp LOS	A	A	A	A	A	B	C	A	E			
Approach Vol, veh/h		1123			2398			594				
Approach Delay, s/veh		6.6			9.2			57.3				
Approach LOS		A			A			E				

Timer - Assigned Phs		2				6		8				
Phs Duration (G+Y+Rc), s		67.3				67.3		22.7				
Change Period (Y+Rc), s		5.0				5.0		5.0				
Max Green Setting (Gmax), s		60.0				60.0		20.0				
Max Q Clear Time (g_c+I1), s		11.0				27.4		16.9				
Green Ext Time (p_c), s		8.9				19.5		0.8				

Intersection Summary	
HCM 6th Ctrl Delay	15.4
HCM 6th LOS	B

Notes

User approved volume balancing among the lanes for turning movement.

Movement	EBL	EBT	EBR	WBL	WBT	WBR	NBL	NBT	NBR	SBL	SBT	SBR
Lane Configurations												
Traffic Volume (veh/h)	0	1761	0	0	1658	577	292	1	1217	0	0	0
Future Volume (veh/h)	0	1761	0	0	1658	577	292	1	1217	0	0	0
Initial Q (Qb), veh	0	0	0	0	0	0	0	0	0			
Ped-Bike Adj(A_pbT)	1.00		1.00	1.00		1.00	1.00		1.00			
Parking Bus, Adj	1.00	1.00	1.00	1.00	1.00	1.00	1.00	1.00	1.00			
Work Zone On Approach		No			No			No				
Adj Sat Flow, veh/h/ln	0	1772	0	0	1772	1772	1673	1772	1772			
Adj Flow Rate, veh/h	0	1815	0	0	1709	595	301	0	1256			
Peak Hour Factor	0.97	0.97	0.97	0.97	0.97	0.97	0.97	0.97	0.97			
Percent Heavy Veh, %	0	2	0	0	2	2	2	2	2			
Cap, veh/h	0	2050	0	0	2050	636	670	0	1263			
Arrive On Green	0.00	0.42	0.00	0.00	0.42	0.42	0.42	0.00	0.42			
Sat Flow, veh/h	0	5156	0	0	4997	1502	1594	0	3003			
Grp Volume(v), veh/h	0	1815	0	0	1709	595	301	0	1256			
Grp Sat Flow(s),veh/h/ln	0	1612	0	0	1612	1502	1594	0	1502			
Q Serve(g_s), s	0.0	31.1	0.0	0.0	28.3	34.0	12.1	0.0	37.5			
Cycle Q Clear(g_c), s	0.0	31.1	0.0	0.0	28.3	34.0	12.1	0.0	37.5			
Prop In Lane	0.00		0.00	0.00		1.00	1.00		1.00			
Lane Grp Cap(c), veh/h	0	2050	0	0	2050	636	670	0	1263			
V/C Ratio(X)	0.00	0.89	0.00	0.00	0.83	0.94	0.45	0.00	0.99			
Avail Cap(c_a), veh/h	0	2050	0	0	2050	636	673	0	1268			
HCM Platoon Ratio	1.00	1.00	1.00	1.00	1.00	1.00	1.00	1.00	1.00			
Upstream Filter(I)	0.00	0.71	0.00	0.00	0.27	0.27	1.00	0.00	1.00			
Uniform Delay (d), s/veh	0.0	23.9	0.0	0.0	23.1	24.7	18.6	0.0	26.0			
Incr Delay (d2), s/veh	0.0	4.4	0.0	0.0	1.2	8.5	0.5	0.0	23.8			
Initial Q Delay(d3),s/veh	0.0	0.0	0.0	0.0	0.0	0.0	0.0	0.0	0.0			
%ile BackOfQ(95%),veh/ln	0.0	15.8	0.0	0.0	12.2	14.9	7.7	0.0	23.1			
Unsig. Movement Delay, s/veh												
LnGrp Delay(d),s/veh	0.0	28.3	0.0	0.0	24.3	33.3	19.1	0.0	49.7			
LnGrp LOS	A	C	A	A	C	C	B	A	D			
Approach Vol, veh/h		1815			2304			1557				
Approach Delay, s/veh		28.3			26.6			43.8				
Approach LOS		C			C			D				

Timer - Assigned Phs		2				6		8				
Phs Duration (G+Y+Rc), s		45.1				45.1		44.9				
Change Period (Y+Rc), s		5.0				5.0		5.0				
Max Green Setting (Gmax), s		40.0				40.0		40.0				
Max Q Clear Time (g_c+I1), s		33.1				36.0		39.5				
Green Ext Time (p_c), s		5.3				3.5		0.4				

Intersection Summary	
HCM 6th Ctrl Delay	31.9
HCM 6th LOS	C

Notes

User approved volume balancing among the lanes for turning movement.

Movement	EBL	EBT	EBR	WBL	WBT	WBR	NBL	NBT	NBR	SBL	SBT	SBR
Lane Configurations												
Traffic Volume (veh/h)	84	979	74	66	1512	52	99	50	43	40	19	150
Future Volume (veh/h)	84	979	74	66	1512	52	99	50	43	40	19	150
Initial Q (Qb), veh	0	0	0	0	0	0	0	0	0	0	0	0
Ped-Bike Adj(A_pbT)	1.00		1.00	1.00		1.00	1.00		1.00	1.00		1.00
Parking Bus, Adj	1.00	1.00	1.00	1.00	1.00	1.00	1.00	1.00	1.00	1.00	1.00	1.00
Work Zone On Approach		No			No			No			No	
Adj Sat Flow, veh/h/ln	1673	1772	1772	1673	1772	1772	1673	1772	1772	1673	1772	1772
Adj Flow Rate, veh/h	88	1020	77	69	1575	54	103	52	45	42	20	156
Peak Hour Factor	0.96	0.96	0.96	0.96	0.96	0.96	0.96	0.96	0.96	0.96	0.96	0.96
Percent Heavy Veh, %	2	2	2	2	2	2	2	2	2	2	2	2
Cap, veh/h	88	3510	263	69	3599	123	157	173	150	231	34	267
Arrive On Green	0.06	0.60	0.60	0.04	0.59	0.59	0.20	0.20	0.20	0.20	0.20	0.20
Sat Flow, veh/h	1594	5828	437	1594	6097	209	1141	877	759	1226	174	1354
Grp Volume(v), veh/h	88	799	298	69	1181	448	103	0	97	42	0	176
Grp Sat Flow(s),veh/h/ln	1594	1524	1693	1594	1524	1734	1141	0	1635	1226	0	1528
Q Serve(g_s), s	7.7	11.8	11.9	6.1	20.0	20.0	12.6	0.0	7.1	4.2	0.0	14.6
Cycle Q Clear(g_c), s	7.7	11.8	11.9	6.1	20.0	20.0	27.2	0.0	7.1	11.3	0.0	14.6
Prop In Lane	1.00		0.26	1.00		0.12	1.00		0.46	1.00		0.89
Lane Grp Cap(c), veh/h	88	2753	1020	69	2699	1024	157	0	323	231	0	301
V/C Ratio(X)	1.00	0.29	0.29	1.00	0.44	0.44	0.65	0.00	0.30	0.18	0.00	0.58
Avail Cap(c_a), veh/h	159	2753	1020	137	2699	1024	242	0	444	322	0	415
HCM Platoon Ratio	1.00	1.00	1.00	1.00	1.00	1.00	1.00	1.00	1.00	1.00	1.00	1.00
Upstream Filter(I)	0.96	0.96	0.96	1.00	1.00	1.00	1.00	0.00	1.00	1.00	0.00	1.00
Uniform Delay (d), s/veh	66.1	13.4	13.4	67.0	15.8	15.8	63.3	0.0	48.0	52.8	0.0	51.0
Incr Delay (d2), s/veh	39.0	0.3	0.7	32.1	0.5	1.4	1.7	0.0	0.2	0.1	0.0	0.7
Initial Q Delay(d3),s/veh	0.0	0.0	0.0	0.0	0.0	0.0	0.0	0.0	0.0	0.0	0.0	0.0
%ile BackOfQ(95%),veh/ln	7.2	6.9	7.8	5.4	10.8	12.3	6.7	0.0	5.2	2.4	0.0	9.5
Unsig. Movement Delay, s/veh												
LnGrp Delay(d),s/veh	105.2	13.7	14.1	99.0	16.4	17.2	65.1	0.0	48.1	52.9	0.0	51.6
LnGrp LOS	F	B	B	F	B	B	E	A	D	D	A	D
Approach Vol, veh/h		1185			1698			200			218	
Approach Delay, s/veh		20.6			19.9			56.9			51.9	
Approach LOS		C			B			E			D	

Timer - Assigned Phs	1	2		4	5	6		8
Phs Duration (G+Y+Rc), s	12.1	92.3		35.6	13.7	90.6		35.6
Change Period (Y+Rc), s	4.0	6.0		6.0	4.0	6.0		6.0
Max Green Setting (Gmax), s	14.0	70.0		40.0	16.0	68.0		40.0
Max Q Clear Time (g_c+I1), s	8.1	13.9		16.6	9.7	22.0		29.2
Green Ext Time (p_c), s	0.0	8.1		0.7	0.0	14.2		0.4

Intersection Summary	
HCM 6th Ctrl Delay	24.5
HCM 6th LOS	C

Movement	EBL	EBT	EBR	WBL	WBT	WBR	NBL	NBT	NBR	SBL	SBT	SBR
Lane Configurations												
Traffic Volume (veh/h)	357	1853	104	48	1372	111	84	58	46	117	35	169
Future Volume (veh/h)	357	1853	104	48	1372	111	84	58	46	117	35	169
Initial Q (Qb), veh	0	0	0	0	0	0	0	0	0	0	0	0
Ped-Bike Adj(A_pbT)	1.00		1.00	1.00		1.00	1.00		1.00	1.00		1.00
Parking Bus, Adj	1.00	1.00	1.00	1.00	1.00	1.00	1.00	1.00	1.00	1.00	1.00	1.00
Work Zone On Approach		No			No			No			No	
Adj Sat Flow, veh/h/ln	1673	1772	1772	1673	1772	1772	1673	1772	1772	1673	1772	1772
Adj Flow Rate, veh/h	372	1930	108	50	1429	116	88	60	48	122	36	176
Peak Hour Factor	0.96	0.96	0.96	0.96	0.96	0.96	0.96	0.96	0.96	0.96	0.96	0.96
Percent Heavy Veh, %	2	2	2	2	2	2	2	2	2	2	2	2
Cap, veh/h	373	3589	201	50	2319	188	142	190	152	237	55	267
Arrive On Green	0.23	0.60	0.60	0.03	0.40	0.40	0.21	0.21	0.21	0.21	0.21	0.21
Sat Flow, veh/h	1594	5951	333	1594	5790	469	1105	911	729	1214	262	1280
Grp Volume(v), veh/h	372	1483	555	50	1128	417	88	0	108	122	0	212
Grp Sat Flow(s),veh/h/ln	1594	1524	1712	1594	1524	1687	1105	0	1641	1214	0	1542
Q Serve(g_s), s	32.7	26.7	26.7	4.4	27.5	27.6	11.1	0.0	7.8	13.3	0.0	17.7
Cycle Q Clear(g_c), s	32.7	26.7	26.7	4.4	27.5	27.6	28.8	0.0	7.8	21.1	0.0	17.7
Prop In Lane	1.00		0.19	1.00		0.28	1.00		0.44	1.00		0.83
Lane Grp Cap(c), veh/h	373	2757	1033	50	1831	676	142	0	342	237	0	321
V/C Ratio(X)	1.00	0.54	0.54	1.00	0.62	0.62	0.62	0.00	0.32	0.52	0.00	0.66
Avail Cap(c_a), veh/h	455	2757	1033	108	1831	676	212	0	445	313	0	418
HCM Platoon Ratio	1.00	1.00	1.00	1.00	1.00	1.00	1.00	1.00	1.00	1.00	1.00	1.00
Upstream Filter(I)	0.64	0.64	0.64	1.00	1.00	1.00	1.00	0.00	1.00	1.00	0.00	1.00
Uniform Delay (d), s/veh	53.6	16.3	16.3	67.8	33.4	33.4	64.1	0.0	47.0	55.9	0.0	50.9
Incr Delay (d2), s/veh	29.8	0.5	1.3	35.8	1.6	4.2	1.6	0.0	0.2	0.6	0.0	1.0
Initial Q Delay(d3),s/veh	0.0	0.0	0.0	0.0	0.0	0.0	0.0	0.0	0.0	0.0	0.0	0.0
%ile BackOfQ(95%),veh/ln	20.9	12.5	14.1	4.0	15.2	17.2	5.7	0.0	5.8	7.3	0.0	11.1
Unsig. Movement Delay, s/veh												
LnGrp Delay(d),s/veh	83.4	16.8	17.6	103.6	35.0	37.6	65.7	0.0	47.2	56.5	0.0	51.9
LnGrp LOS	F	B	B	F	C	D	E	A	D	E	A	D
Approach Vol, veh/h		2410			1595			196			334	
Approach Delay, s/veh		27.3			37.8			55.5			53.6	
Approach LOS		C			D			E			D	

Timer - Assigned Phs	1	2		4	5	6		8
Phs Duration (G+Y+Rc), s	10.4	92.4		37.2	38.8	64.1		37.2
Change Period (Y+Rc), s	4.0	6.0		6.0	4.0	6.0		6.0
Max Green Setting (Gmax), s	11.5	72.5		40.0	42.0	42.0		40.0
Max Q Clear Time (g_c+I1), s	6.4	28.7		23.1	34.7	29.6		30.8
Green Ext Time (p_c), s	0.0	20.1		0.9	0.1	7.3		0.4

Intersection Summary	
HCM 6th Ctrl Delay	34.1
HCM 6th LOS	C

Movement	EBL	EBT	EBR	WBL	WBT	WBR	NBL	NBT	NBR	SBL	SBT	SBR
Lane Configurations												
Traffic Volume (veh/h)	84	1056	74	66	1533	52	99	50	43	40	19	150
Future Volume (veh/h)	84	1056	74	66	1533	52	99	50	43	40	19	150
Initial Q (Qb), veh	0	0	0	0	0	0	0	0	0	0	0	0
Ped-Bike Adj(A_pbT)	1.00		1.00	1.00		1.00	1.00		1.00	1.00		1.00
Parking Bus, Adj	1.00	1.00	1.00	1.00	1.00	1.00	1.00	1.00	1.00	1.00	1.00	1.00
Work Zone On Approach		No			No			No			No	
Adj Sat Flow, veh/h/ln	1673	1772	1772	1673	1772	1772	1673	1772	1772	1673	1772	1772
Adj Flow Rate, veh/h	88	1100	77	69	1597	54	103	52	45	42	20	156
Peak Hour Factor	0.96	0.96	0.96	0.96	0.96	0.96	0.96	0.96	0.96	0.96	0.96	0.96
Percent Heavy Veh, %	2	2	2	2	2	2	2	2	2	2	2	2
Cap, veh/h	88	3530	246	69	3601	122	157	173	150	231	34	267
Arrive On Green	0.06	0.60	0.60	0.04	0.59	0.59	0.20	0.20	0.20	0.20	0.20	0.20
Sat Flow, veh/h	1594	5862	408	1594	6100	206	1141	877	759	1226	174	1354
Grp Volume(v), veh/h	88	857	320	69	1197	454	103	0	97	42	0	176
Grp Sat Flow(s),veh/h/ln	1594	1524	1698	1594	1524	1735	1141	0	1635	1226	0	1528
Q Serve(g_s), s	7.7	12.8	12.9	6.1	20.3	20.4	12.6	0.0	7.1	4.2	0.0	14.6
Cycle Q Clear(g_c), s	7.7	12.8	12.9	6.1	20.3	20.4	27.2	0.0	7.1	11.3	0.0	14.6
Prop In Lane	1.00		0.24	1.00		0.12	1.00		0.46	1.00		0.89
Lane Grp Cap(c), veh/h	88	2753	1023	69	2699	1024	157	0	323	231	0	301
V/C Ratio(X)	1.00	0.31	0.31	1.00	0.44	0.44	0.65	0.00	0.30	0.18	0.00	0.58
Avail Cap(c_a), veh/h	159	2753	1023	137	2699	1024	242	0	444	322	0	415
HCM Platoon Ratio	1.00	1.00	1.00	1.00	1.00	1.00	1.00	1.00	1.00	1.00	1.00	1.00
Upstream Filter(I)	0.95	0.95	0.95	1.00	1.00	1.00	1.00	0.00	1.00	1.00	0.00	1.00
Uniform Delay (d), s/veh	66.1	13.6	13.6	67.0	15.9	15.9	63.3	0.0	48.0	52.8	0.0	51.0
Incr Delay (d2), s/veh	38.8	0.3	0.8	32.1	0.5	1.4	1.7	0.0	0.2	0.1	0.0	0.7
Initial Q Delay(d3),s/veh	0.0	0.0	0.0	0.0	0.0	0.0	0.0	0.0	0.0	0.0	0.0	0.0
%ile BackOfQ(95%),veh/ln	7.2	7.4	8.3	5.4	10.9	12.5	6.7	0.0	5.2	2.4	0.0	9.5
Unsig. Movement Delay, s/veh												
LnGrp Delay(d),s/veh	105.0	13.9	14.4	99.0	16.4	17.3	65.1	0.0	48.1	52.9	0.0	51.6
LnGrp LOS	F	B	B	F	B	B	E	A	D	D	A	D
Approach Vol, veh/h		1265			1720			200			218	
Approach Delay, s/veh		20.4			20.0			56.9			51.9	
Approach LOS		C			B			E			D	

Timer - Assigned Phs	1	2		4	5	6		8
Phs Duration (G+Y+Rc), s	12.1	92.3		35.6	13.7	90.6		35.6
Change Period (Y+Rc), s	4.0	6.0		6.0	4.0	6.0		6.0
Max Green Setting (Gmax), s	14.0	70.0		40.0	16.0	68.0		40.0
Max Q Clear Time (g_c+I1), s	8.1	14.9		16.6	9.7	22.4		29.2
Green Ext Time (p_c), s	0.0	8.9		0.7	0.0	14.5		0.4

Intersection Summary		
HCM 6th Ctrl Delay		24.3
HCM 6th LOS		C

Movement	EBL	EBT	EBR	WBL	WBT	WBR	NBL	NBT	NBR	SBL	SBT	SBR
Lane Configurations												
Traffic Volume (veh/h)	357	1894	104	48	1478	111	84	58	46	117	35	169
Future Volume (veh/h)	357	1894	104	48	1478	111	84	58	46	117	35	169
Initial Q (Qb), veh	0	0	0	0	0	0	0	0	0	0	0	0
Ped-Bike Adj(A_pbT)	1.00		1.00	1.00		1.00	1.00		1.00	1.00		1.00
Parking Bus, Adj	1.00	1.00	1.00	1.00	1.00	1.00	1.00	1.00	1.00	1.00	1.00	1.00
Work Zone On Approach		No			No			No			No	
Adj Sat Flow, veh/h/ln	1673	1772	1772	1673	1772	1772	1673	1772	1772	1673	1772	1772
Adj Flow Rate, veh/h	372	1973	108	50	1540	116	88	60	48	122	36	176
Peak Hour Factor	0.96	0.96	0.96	0.96	0.96	0.96	0.96	0.96	0.96	0.96	0.96	0.96
Percent Heavy Veh, %	2	2	2	2	2	2	2	2	2	2	2	2
Cap, veh/h	373	3594	197	50	2334	176	142	190	152	237	55	267
Arrive On Green	0.23	0.60	0.60	0.03	0.40	0.40	0.21	0.21	0.21	0.21	0.21	0.21
Sat Flow, veh/h	1594	5959	326	1594	5826	439	1105	911	729	1214	262	1280
Grp Volume(v), veh/h	372	1514	567	50	1208	448	88	0	108	122	0	212
Grp Sat Flow(s),veh/h/ln	1594	1524	1713	1594	1524	1693	1105	0	1641	1214	0	1542
Q Serve(g_s), s	32.7	27.5	27.5	4.4	30.1	30.2	11.1	0.0	7.8	13.3	0.0	17.7
Cycle Q Clear(g_c), s	32.7	27.5	27.5	4.4	30.1	30.2	28.8	0.0	7.8	21.1	0.0	17.7
Prop In Lane	1.00		0.19	1.00		0.26	1.00		0.44	1.00		0.83
Lane Grp Cap(c), veh/h	373	2757	1033	50	1831	678	142	0	342	237	0	321
V/C Ratio(X)	1.00	0.55	0.55	1.00	0.66	0.66	0.62	0.00	0.32	0.52	0.00	0.66
Avail Cap(c_a), veh/h	455	2757	1033	108	1831	678	212	0	445	313	0	418
HCM Platoon Ratio	1.00	1.00	1.00	1.00	1.00	1.00	1.00	1.00	1.00	1.00	1.00	1.00
Upstream Filter(I)	0.62	0.62	0.62	1.00	1.00	1.00	1.00	0.00	1.00	1.00	0.00	1.00
Uniform Delay (d), s/veh	53.6	16.5	16.5	67.8	34.2	34.2	64.1	0.0	47.0	55.9	0.0	50.9
Incr Delay (d2), s/veh	29.3	0.5	1.3	35.8	1.9	5.0	1.6	0.0	0.2	0.6	0.0	1.0
Initial Q Delay(d3),s/veh	0.0	0.0	0.0	0.0	0.0	0.0	0.0	0.0	0.0	0.0	0.0	0.0
%ile BackOfQ(95%),veh/ln	20.8	12.8	14.4	4.0	16.5	18.7	5.7	0.0	5.8	7.3	0.0	11.1
Unsig. Movement Delay, s/veh												
LnGrp Delay(d),s/veh	82.9	17.0	17.8	103.6	36.1	39.2	65.7	0.0	47.2	56.5	0.0	51.9
LnGrp LOS	F	B	B	F	D	D	E	A	D	E	A	D
Approach Vol, veh/h		2453			1706			196			334	
Approach Delay, s/veh		27.2			38.9			55.5			53.6	
Approach LOS		C			D			E			D	

Timer - Assigned Phs	1	2		4	5	6		8
Phs Duration (G+Y+Rc), s	10.4	92.4		37.2	38.8	64.1		37.2
Change Period (Y+Rc), s	4.0	6.0		6.0	4.0	6.0		6.0
Max Green Setting (Gmax), s	11.5	72.5		40.0	42.0	42.0		40.0
Max Q Clear Time (g_c+I1), s	6.4	29.5		23.1	34.7	32.2		30.8
Green Ext Time (p_c), s	0.0	20.6		0.9	0.1	6.5		0.4

Intersection Summary		
HCM 6th Ctrl Delay		34.5
HCM 6th LOS		C

Movement	EBL	EBT	EBR	WBL	WBT	WBR	NBL	NBT	NBR	SBL	SBT	SBR
Lane Configurations												
Traffic Volume (veh/h)	106	1206	81	69	1866	54	108	52	45	42	20	207
Future Volume (veh/h)	106	1206	81	69	1866	54	108	52	45	42	20	207
Initial Q (Qb), veh	0	0	0	0	0	0	0	0	0	0	0	0
Ped-Bike Adj(A_pbT)	1.00		1.00	1.00		1.00	1.00		1.00	1.00		1.00
Parking Bus, Adj	1.00	1.00	1.00	1.00	1.00	1.00	1.00	1.00	1.00	1.00	1.00	1.00
Work Zone On Approach		No			No			No			No	
Adj Sat Flow, veh/h/ln	1673	1772	1772	1673	1772	1772	1673	1772	1772	1673	1772	1772
Adj Flow Rate, veh/h	110	1256	84	72	1944	56	112	54	47	44	21	216
Peak Hour Factor	0.96	0.96	0.96	0.96	0.96	0.96	0.96	0.96	0.96	0.96	0.96	0.96
Percent Heavy Veh, %	2	2	2	2	2	2	2	2	2	2	2	2
Cap, veh/h	110	3253	217	72	3247	94	165	214	186	289	33	339
Arrive On Green	0.07	0.55	0.55	0.05	0.53	0.53	0.24	0.24	0.24	0.24	0.24	0.24
Sat Flow, veh/h	1594	5881	392	1594	6135	177	1080	874	761	1222	135	1387
Grp Volume(v), veh/h	110	976	364	72	1449	551	112	0	101	44	0	237
Grp Sat Flow(s),veh/h/ln	1594	1524	1701	1594	1524	1740	1080	0	1635	1222	0	1522
Q Serve(g_s), s	9.7	17.0	17.1	6.3	30.6	30.6	14.5	0.0	7.0	4.2	0.0	19.5
Cycle Q Clear(g_c), s	9.7	17.0	17.1	6.3	30.6	30.6	34.0	0.0	7.0	11.2	0.0	19.5
Prop In Lane	1.00		0.23	1.00		0.10	1.00		0.47	1.00		0.91
Lane Grp Cap(c), veh/h	110	2529	941	72	2420	921	165	0	400	289	0	372
V/C Ratio(X)	1.00	0.39	0.39	1.00	0.60	0.60	0.68	0.00	0.25	0.15	0.00	0.64
Avail Cap(c_a), veh/h	159	2529	941	137	2420	921	194	0	444	322	0	413
HCM Platoon Ratio	1.00	1.00	1.00	1.00	1.00	1.00	1.00	1.00	1.00	1.00	1.00	1.00
Upstream Filter(I)	0.92	0.92	0.92	1.00	1.00	1.00	1.00	0.00	1.00	1.00	0.00	1.00
Uniform Delay (d), s/veh	65.2	17.8	17.8	66.8	22.7	22.7	62.5	0.0	42.6	47.1	0.0	47.3
Incr Delay (d2), s/veh	53.6	0.4	1.1	37.9	1.1	2.9	5.0	0.0	0.1	0.1	0.0	1.8
Initial Q Delay(d3),s/veh	0.0	0.0	0.0	0.0	0.0	0.0	0.0	0.0	0.0	0.0	0.0	0.0
%ile BackOfQ(95%),veh/ln	9.2	9.5	10.6	5.9	15.8	18.2	7.5	0.0	5.1	2.3	0.0	12.0
Unsig. Movement Delay, s/veh												
LnGrp Delay(d),s/veh	118.8	18.2	18.9	104.7	23.8	25.6	67.5	0.0	42.7	47.2	0.0	49.1
LnGrp LOS	F	B	B	F	C	C	E	A	D	D	A	D
Approach Vol, veh/h		1450			2072			213			281	
Approach Delay, s/veh		26.0			27.1			55.7			48.8	
Approach LOS		C			C			E			D	

Timer - Assigned Phs	1	2		4	5	6		8
Phs Duration (G+Y+Rc), s	12.3	85.4		42.2	15.7	82.1		42.2
Change Period (Y+Rc), s	4.0	6.0		6.0	4.0	6.0		6.0
Max Green Setting (Gmax), s	14.0	70.0		40.0	16.0	68.0		40.0
Max Q Clear Time (g_c+I1), s	8.3	19.1		21.5	11.7	32.6		36.0
Green Ext Time (p_c), s	0.0	10.7		0.9	0.0	17.7		0.2

Intersection Summary		
HCM 6th Ctrl Delay		29.7
HCM 6th LOS		C

Movement	EBL	EBT	EBR	WBL	WBT	WBR	NBL	NBT	NBR	SBL	SBT	SBR
Lane Configurations												
Traffic Volume (veh/h)	428	2312	114	50	1740	115	94	60	48	122	36	213
Future Volume (veh/h)	428	2312	114	50	1740	115	94	60	48	122	36	213
Initial Q (Qb), veh	0	0	0	0	0	0	0	0	0	0	0	0
Ped-Bike Adj(A_pbT)	1.00		1.00	1.00		1.00	1.00		1.00	1.00		1.00
Parking Bus, Adj	1.00	1.00	1.00	1.00	1.00	1.00	1.00	1.00	1.00	1.00	1.00	1.00
Work Zone On Approach		No			No			No			No	
Adj Sat Flow, veh/h/ln	1673	1772	1772	1673	1772	1772	1673	1772	1772	1673	1772	1772
Adj Flow Rate, veh/h	446	2408	119	52	1812	120	98	62	50	127	38	222
Peak Hour Factor	0.96	0.96	0.96	0.96	0.96	0.96	0.96	0.96	0.96	0.96	0.96	0.96
Percent Heavy Veh, %	2	2	2	2	2	2	2	2	2	2	2	2
Cap, veh/h	446	3374	166	52	1856	123	151	225	181	284	56	324
Arrive On Green	0.28	0.56	0.56	0.03	0.32	0.32	0.25	0.25	0.25	0.25	0.25	0.25
Sat Flow, veh/h	1594	5995	296	1594	5884	390	1057	908	732	1210	224	1311
Grp Volume(v), veh/h	446	1835	692	52	1408	524	98	0	112	127	0	260
Grp Sat Flow(s),veh/h/ln	1594	1524	1719	1594	1524	1702	1057	0	1640	1210	0	1536
Q Serve(g_s), s	39.2	41.1	41.2	4.6	42.6	42.6	13.0	0.0	7.7	13.3	0.0	21.5
Cycle Q Clear(g_c), s	39.2	41.1	41.2	4.6	42.6	42.6	34.4	0.0	7.7	21.0	0.0	21.5
Prop In Lane	1.00		0.17	1.00		0.23	1.00		0.45	1.00		0.85
Lane Grp Cap(c), veh/h	446	2573	967	52	1442	537	151	0	406	284	0	380
V/C Ratio(X)	1.00	0.71	0.72	1.00	0.98	0.98	0.65	0.00	0.28	0.45	0.00	0.68
Avail Cap(c_a), veh/h	455	2573	967	108	1442	537	176	0	445	313	0	417
HCM Platoon Ratio	1.00	1.00	1.00	1.00	1.00	1.00	1.00	1.00	1.00	1.00	1.00	1.00
Upstream Filter(I)	0.28	0.28	0.28	1.00	1.00	1.00	1.00	0.00	1.00	1.00	0.00	1.00
Uniform Delay (d), s/veh	50.4	22.4	22.4	67.7	47.4	47.4	63.3	0.0	42.6	51.0	0.0	47.7
Incr Delay (d2), s/veh	22.0	0.5	1.3	35.1	18.7	33.4	4.0	0.0	0.1	0.4	0.0	3.1
Initial Q Delay(d3),s/veh	0.0	0.0	0.0	0.0	0.0	0.0	0.0	0.0	0.0	0.0	0.0	0.0
%ile BackOfQ(95%),veh/ln	21.4	16.8	19.1	4.2	24.9	30.0	6.5	0.0	5.7	7.2	0.0	13.2
Unsig. Movement Delay, s/veh												
LnGrp Delay(d),s/veh	72.4	22.8	23.7	102.8	66.1	80.8	67.3	0.0	42.7	51.4	0.0	50.8
LnGrp LOS	E	C	C	F	E	F	E	A	D	D	A	D
Approach Vol, veh/h		2973			1984			210			387	
Approach Delay, s/veh		30.5			70.9			54.2			51.0	
Approach LOS		C			E			D			D	

Timer - Assigned Phs	1	2		4	5	6		8
Phs Duration (G+Y+Rc), s	10.6	86.8		42.6	45.2	52.2		42.6
Change Period (Y+Rc), s	4.0	6.0		6.0	4.0	6.0		6.0
Max Green Setting (Gmax), s	11.5	72.5		40.0	42.0	42.0		40.0
Max Q Clear Time (g_c+I1), s	6.6	43.2		23.5	41.2	44.6		36.4
Green Ext Time (p_c), s	0.0	21.1		1.1	0.0	0.0		0.2

Intersection Summary		
HCM 6th Ctrl Delay		47.2
HCM 6th LOS		D

Movement	EBL	EBT	EBR	WBL	WBT	WBR	NBL	NBT	NBR	SBL	SBT	SBR
Lane Configurations												
Traffic Volume (veh/h)	106	1283	81	69	1887	54	108	52	45	42	20	207
Future Volume (veh/h)	106	1283	81	69	1887	54	108	52	45	42	20	207
Initial Q (Qb), veh	0	0	0	0	0	0	0	0	0	0	0	0
Ped-Bike Adj(A_pbT)	1.00		1.00	1.00		1.00	1.00		1.00	1.00		1.00
Parking Bus, Adj	1.00	1.00	1.00	1.00	1.00	1.00	1.00	1.00	1.00	1.00	1.00	1.00
Work Zone On Approach		No			No			No			No	
Adj Sat Flow, veh/h/ln	1673	1772	1772	1673	1772	1772	1673	1772	1772	1673	1772	1772
Adj Flow Rate, veh/h	110	1336	84	72	1966	56	112	54	47	44	21	216
Peak Hour Factor	0.96	0.96	0.96	0.96	0.96	0.96	0.96	0.96	0.96	0.96	0.96	0.96
Percent Heavy Veh, %	2	2	2	2	2	2	2	2	2	2	2	2
Cap, veh/h	110	3267	205	72	3248	93	165	214	186	289	33	339
Arrive On Green	0.07	0.55	0.55	0.05	0.53	0.53	0.24	0.24	0.24	0.24	0.24	0.24
Sat Flow, veh/h	1594	5906	371	1594	6137	175	1080	874	761	1222	135	1387
Grp Volume(v), veh/h	110	1033	387	72	1464	558	112	0	101	44	0	237
Grp Sat Flow(s),veh/h/ln	1594	1524	1705	1594	1524	1740	1080	0	1635	1222	0	1522
Q Serve(g_s), s	9.7	18.3	18.3	6.3	31.1	31.1	14.5	0.0	7.0	4.2	0.0	19.5
Cycle Q Clear(g_c), s	9.7	18.3	18.3	6.3	31.1	31.1	34.0	0.0	7.0	11.2	0.0	19.5
Prop In Lane	1.00		0.22	1.00		0.10	1.00		0.47	1.00		0.91
Lane Grp Cap(c), veh/h	110	2529	943	72	2420	921	165	0	400	289	0	372
V/C Ratio(X)	1.00	0.41	0.41	1.00	0.61	0.61	0.68	0.00	0.25	0.15	0.00	0.64
Avail Cap(c_a), veh/h	159	2529	943	137	2420	921	194	0	444	322	0	413
HCM Platoon Ratio	1.00	1.00	1.00	1.00	1.00	1.00	1.00	1.00	1.00	1.00	1.00	1.00
Upstream Filter(I)	0.91	0.91	0.91	1.00	1.00	1.00	1.00	0.00	1.00	1.00	0.00	1.00
Uniform Delay (d), s/veh	65.2	18.1	18.1	66.8	22.8	22.8	62.5	0.0	42.6	47.1	0.0	47.3
Incr Delay (d2), s/veh	53.3	0.4	1.2	37.9	1.1	2.9	5.0	0.0	0.1	0.1	0.0	1.8
Initial Q Delay(d3),s/veh	0.0	0.0	0.0	0.0	0.0	0.0	0.0	0.0	0.0	0.0	0.0	0.0
%ile BackOfQ(95%),veh/ln	9.1	10.0	11.3	5.9	16.0	18.5	7.5	0.0	5.1	2.3	0.0	12.0
Unsig. Movement Delay, s/veh												
LnGrp Delay(d),s/veh	118.5	18.5	19.3	104.7	24.0	25.8	67.5	0.0	42.7	47.2	0.0	49.1
LnGrp LOS	F	B	B	F	C	C	E	A	D	D	A	D
Approach Vol, veh/h		1530			2094			213			281	
Approach Delay, s/veh		25.9			27.2			55.7			48.8	
Approach LOS		C			C			E			D	

Timer - Assigned Phs	1	2		4	5	6		8
Phs Duration (G+Y+Rc), s	12.3	85.4		42.2	15.7	82.1		42.2
Change Period (Y+Rc), s	4.0	6.0		6.0	4.0	6.0		6.0
Max Green Setting (Gmax), s	14.0	70.0		40.0	16.0	68.0		40.0
Max Q Clear Time (g_c+I1), s	8.3	20.3		21.5	11.7	33.1		36.0
Green Ext Time (p_c), s	0.0	11.7		0.9	0.0	17.8		0.2

Intersection Summary		
HCM 6th Ctrl Delay		29.7
HCM 6th LOS		C

Movement	EBL	EBT	EBR	WBL	WBT	WBR	NBL	NBT	NBR	SBL	SBT	SBR
Lane Configurations												
Traffic Volume (veh/h)	428	2353	114	50	1846	115	94	60	48	122	36	213
Future Volume (veh/h)	428	2353	114	50	1846	115	94	60	48	122	36	213
Initial Q (Qb), veh	0	0	0	0	0	0	0	0	0	0	0	0
Ped-Bike Adj(A_pbT)	1.00		1.00	1.00		1.00	1.00		1.00	1.00		1.00
Parking Bus, Adj	1.00	1.00	1.00	1.00	1.00	1.00	1.00	1.00	1.00	1.00	1.00	1.00
Work Zone On Approach		No			No			No			No	
Adj Sat Flow, veh/h/ln	1673	1772	1772	1673	1772	1772	1673	1772	1772	1673	1772	1772
Adj Flow Rate, veh/h	446	2451	119	52	1923	120	98	62	50	127	38	222
Peak Hour Factor	0.96	0.96	0.96	0.96	0.96	0.96	0.96	0.96	0.96	0.96	0.96	0.96
Percent Heavy Veh, %	2	2	2	2	2	2	2	2	2	2	2	2
Cap, veh/h	446	3377	164	52	1864	116	151	225	181	284	56	324
Arrive On Green	0.28	0.56	0.56	0.03	0.32	0.32	0.25	0.25	0.25	0.25	0.25	0.25
Sat Flow, veh/h	1594	6000	291	1594	5908	369	1057	908	732	1210	224	1311
Grp Volume(v), veh/h	446	1866	704	52	1488	555	98	0	112	127	0	260
Grp Sat Flow(s),veh/h/ln	1594	1524	1720	1594	1524	1706	1057	0	1640	1210	0	1536
Q Serve(g_s), s	39.2	42.2	42.4	4.6	44.2	44.2	13.0	0.0	7.7	13.3	0.0	21.5
Cycle Q Clear(g_c), s	39.2	42.2	42.4	4.6	44.2	44.2	34.4	0.0	7.7	21.0	0.0	21.5
Prop In Lane	1.00		0.17	1.00		0.22	1.00		0.45	1.00		0.85
Lane Grp Cap(c), veh/h	446	2573	968	52	1442	538	151	0	406	284	0	380
V/C Ratio(X)	1.00	0.73	0.73	1.00	1.03	1.03	0.65	0.00	0.28	0.45	0.00	0.68
Avail Cap(c_a), veh/h	455	2573	968	108	1442	538	176	0	445	313	0	417
HCM Platoon Ratio	1.00	1.00	1.00	1.00	1.00	1.00	1.00	1.00	1.00	1.00	1.00	1.00
Upstream Filter(I)	0.25	0.25	0.25	1.00	1.00	1.00	1.00	0.00	1.00	1.00	0.00	1.00
Uniform Delay (d), s/veh	50.4	22.6	22.7	67.7	47.9	47.9	63.3	0.0	42.6	51.0	0.0	47.7
Incr Delay (d2), s/veh	20.8	0.5	1.2	35.1	32.2	47.2	4.0	0.0	0.1	0.4	0.0	3.1
Initial Q Delay(d3),s/veh	0.0	0.0	0.0	0.0	0.0	0.0	0.0	0.0	0.0	0.0	0.0	0.0
%ile BackOfQ(95%),veh/ln	21.0	17.1	19.4	4.2	28.3	33.9	6.5	0.0	5.7	7.2	0.0	13.2
Unsig. Movement Delay, s/veh												
LnGrp Delay(d),s/veh	71.2	23.1	23.9	102.8	80.1	95.1	67.3	0.0	42.7	51.4	0.0	50.8
LnGrp LOS	E	C	C	F	F	F	E	A	D	D	A	D
Approach Vol, veh/h		3016			2095			210			387	
Approach Delay, s/veh		30.4			84.7			54.2			51.0	
Approach LOS		C			F			D			D	

Timer - Assigned Phs	1	2		4	5	6		8
Phs Duration (G+Y+Rc), s	10.6	86.8		42.6	45.2	52.2		42.6
Change Period (Y+Rc), s	4.0	6.0		6.0	4.0	6.0		6.0
Max Green Setting (Gmax), s	11.5	72.5		40.0	42.0	42.0		40.0
Max Q Clear Time (g_c+I1), s	6.6	44.4		23.5	41.2	46.2		36.4
Green Ext Time (p_c), s	0.0	20.8		1.1	0.0	0.0		0.2

Intersection Summary		
HCM 6th Ctrl Delay		52.6
HCM 6th LOS		D

Movement	EBL	EBT	EBR	WBL	WBT	WBR	NBL	NBT	NBR	SBL	SBT	SBR
Lane Configurations												
Traffic Volume (veh/h)	5	808	403	290	792	2	632	10	361	1	3	9
Future Volume (veh/h)	5	808	403	290	792	2	632	10	361	1	3	9
Initial Q (Qb), veh	0	0	0	0	0	0	0	0	0	0	0	0
Ped-Bike Adj(A_pbT)	1.00		1.00	1.00		1.00	1.00		1.00	1.00		1.00
Parking Bus, Adj	1.00	1.00	1.00	1.00	1.00	1.00	1.00	1.00	1.00	1.00	1.00	1.00
Work Zone On Approach		No			No			No			No	
Adj Sat Flow, veh/h/ln	1772	1772	1772	1575	1772	1772	1575	1772	1772	1772	1772	1772
Adj Flow Rate, veh/h	5	869	433	312	852	2	680	11	388	1	3	10
Peak Hour Factor	0.93	0.93	0.93	0.93	0.93	0.93	0.93	0.93	0.93	0.93	0.93	0.93
Percent Heavy Veh, %	2	2	2	2	2	2	2	2	2	2	2	2
Cap, veh/h	31	2277	1058	312	1885	841	681	415	513	31	7	22
Arrive On Green	0.02	0.47	0.47	0.11	0.56	0.56	0.23	0.23	0.23	0.02	0.02	0.02
Sat Flow, veh/h	1688	4837	1502	2910	3367	1502	2910	1772	1502	1688	359	1197
Grp Volume(v), veh/h	5	869	433	312	852	2	680	11	388	1	0	13
Grp Sat Flow(s),veh/h/ln	1688	1612	1502	1455	1683	1502	1455	1772	1502	1688	0	1556
Q Serve(g_s), s	0.5	19.1	19.7	17.7	24.6	0.1	38.5	0.8	37.9	0.1	0.0	1.4
Cycle Q Clear(g_c), s	0.5	19.1	19.7	17.7	24.6	0.1	38.5	0.8	37.9	0.1	0.0	1.4
Prop In Lane	1.00		1.00	1.00		1.00	1.00		1.00	1.00		0.77
Lane Grp Cap(c), veh/h	31	2277	1058	312	1885	841	681	415	513	31	0	28
V/C Ratio(X)	0.16	0.38	0.41	1.00	0.45	0.00	1.00	0.03	0.76	0.03	0.00	0.46
Avail Cap(c_a), veh/h	31	2277	1058	406	1885	841	829	762	807	31	0	255
HCM Platoon Ratio	1.00	1.00	1.00	1.00	1.00	1.00	1.00	1.00	1.00	1.00	1.00	1.00
Upstream Filter(I)	1.00	1.00	1.00	1.00	1.00	1.00	0.83	0.83	0.83	1.00	0.00	1.00
Uniform Delay (d), s/veh	79.8	28.2	10.1	73.6	21.4	16.0	63.2	48.7	48.3	79.6	0.0	80.2
Incr Delay (d2), s/veh	2.5	0.5	1.2	38.3	0.8	0.0	25.3	0.0	0.7	0.4	0.0	11.2
Initial Q Delay(d3),s/veh	0.0	0.0	0.0	0.0	0.0	0.0	0.0	0.0	0.0	0.0	0.0	0.0
%ile BackOfQ(95%),veh/ln	0.4	11.8	10.6	12.8	14.6	0.1	22.4	0.6	19.6	0.1	0.0	1.2
Unsig. Movement Delay, s/veh												
LnGrp Delay(d),s/veh	82.2	28.7	11.3	111.9	22.2	16.0	88.5	48.7	49.0	80.0	0.0	91.4
LnGrp LOS	F	C	B	F	C	B	F	D	D	F	A	F
Approach Vol, veh/h		1307			1166			1079			14	
Approach Delay, s/veh		23.1			46.2			73.9			90.6	
Approach LOS		C			D			E			F	

Timer - Assigned Phs	1	2	3	4	5	6	7	8
Phs Duration (G+Y+Rc), s	24.7	84.7	45.6	10.0	10.0	99.4	10.0	45.6
Change Period (Y+Rc), s	5.0	5.0	5.0	5.0	5.0	5.0	5.0	5.0
Max Green Setting (Gmax), s	25.0	42.0	49.0	29.0	5.0	62.0	5.0	73.0
Max Q Clear Time (g_c+I1), s	19.7	21.7	40.5	3.4	2.5	26.6	2.1	39.9
Green Ext Time (p_c), s	0.0	0.8	0.1	0.0	0.0	0.8	0.0	0.1

Intersection Summary	
HCM 6th Ctrl Delay	46.3
HCM 6th LOS	D

Movement	EBL	EBT	EBR	WBL	WBT	WBR	NBL	NBT	NBR	SBL	SBT	SBR
Lane Configurations												
Traffic Volume (veh/h)	56	1348	642	364	944	7	583	40	208	46	36	56
Future Volume (veh/h)	56	1348	642	364	944	7	583	40	208	46	36	56
Initial Q (Qb), veh	0	0	0	0	0	0	0	0	0	0	0	0
Ped-Bike Adj(A_pbT)	1.00		1.00	1.00		1.00	1.00		1.00	1.00		1.00
Parking Bus, Adj	1.00	1.00	1.00	1.00	1.00	1.00	1.00	1.00	1.00	1.00	1.00	1.00
Work Zone On Approach		No			No			No			No	
Adj Sat Flow, veh/h/ln	1772	1772	1772	1575	1772	1772	1575	1772	1772	1772	1772	1772
Adj Flow Rate, veh/h	58	1390	662	375	973	7	601	41	214	47	37	58
Peak Hour Factor	0.97	0.97	0.97	0.97	0.97	0.97	0.97	0.97	0.97	0.97	0.97	0.97
Percent Heavy Veh, %	2	2	2	2	2	2	2	2	2	2	2	2
Cap, veh/h	59	2105	963	370	1776	792	600	424	551	48	38	60
Arrive On Green	0.03	0.44	0.44	0.13	0.53	0.53	0.21	0.24	0.24	0.03	0.06	0.06
Sat Flow, veh/h	1688	4837	1502	2910	3367	1502	2910	1772	1502	1688	622	975
Grp Volume(v), veh/h	58	1390	662	375	973	7	601	41	214	47	0	95
Grp Sat Flow(s),veh/h/ln	1688	1612	1502	1455	1683	1502	1455	1772	1502	1688	0	1596
Q Serve(g_s), s	5.7	37.6	46.7	21.0	31.7	0.4	34.0	3.0	17.4	4.6	0.0	9.8
Cycle Q Clear(g_c), s	5.7	37.6	46.7	21.0	31.7	0.4	34.0	3.0	17.4	4.6	0.0	9.8
Prop In Lane	1.00		1.00	1.00		1.00	1.00		1.00	1.00		0.61
Lane Grp Cap(c), veh/h	59	2105	963	370	1776	792	600	424	551	48	0	99
V/C Ratio(X)	0.99	0.66	0.69	1.01	0.55	0.01	1.00	0.10	0.39	0.98	0.00	0.96
Avail Cap(c_a), veh/h	215	2105	963	370	1776	792	600	424	551	348	0	261
HCM Platoon Ratio	1.00	1.00	1.00	1.00	1.00	1.00	1.00	1.00	1.00	1.00	1.00	1.00
Upstream Filter(I)	1.00	1.00	1.00	1.00	1.00	1.00	0.75	0.75	0.75	1.00	0.00	1.00
Uniform Delay (d), s/veh	79.6	36.9	19.0	72.0	25.9	18.5	65.5	48.9	38.6	80.1	0.0	77.2
Incr Delay (d2), s/veh	51.2	1.6	4.0	50.0	1.2	0.0	32.4	0.0	0.1	55.5	0.0	34.0
Initial Q Delay(d3),s/veh	0.0	0.0	0.0	0.0	0.0	0.0	0.0	0.0	0.0	0.0	0.0	0.0
%ile BackOfQ(95%),veh/ln	5.9	21.0	22.9	15.6	18.3	0.2	20.6	2.4	10.0	5.0	0.0	8.6
Unsig. Movement Delay, s/veh												
LnGrp Delay(d),s/veh	130.8	38.6	23.0	122.0	27.1	18.5	97.9	48.9	38.7	135.6	0.0	111.2
LnGrp LOS	F	D	C	F	C	B	F	D	D	F	A	F
Approach Vol, veh/h		2110			1355			856			142	
Approach Delay, s/veh		36.2			53.3			80.7			119.3	
Approach LOS		D			D			F			F	

Timer - Assigned Phs	1	2	3	4	5	6	7	8
Phs Duration (G+Y+Rc), s	28.0	78.8	41.0	17.2	12.7	94.1	11.7	46.5
Change Period (Y+Rc), s	5.0	5.0	5.0	5.0	5.0	5.0	5.0	5.0
Max Green Setting (Gmax), s	23.0	57.0	36.0	29.0	23.0	57.0	36.0	29.0
Max Q Clear Time (g_c+I1), s	23.0	48.7	36.0	11.8	7.7	33.7	6.6	19.4
Green Ext Time (p_c), s	0.0	1.3	0.0	0.4	0.1	1.0	0.1	0.0

Intersection Summary	
HCM 6th Ctrl Delay	52.6
HCM 6th LOS	D

Movement	EBL	EBT	EBR	WBL	WBT	WBR	NBL	NBT	NBR	SBL	SBT	SBR
Lane Configurations												
Traffic Volume (veh/h)	5	808	480	311	792	2	653	10	367	1	3	9
Future Volume (veh/h)	5	808	480	311	792	2	653	10	367	1	3	9
Initial Q (Qb), veh	0	0	0	0	0	0	0	0	0	0	0	0
Ped-Bike Adj(A_pbT)	1.00		1.00	1.00		1.00	1.00		1.00	1.00		1.00
Parking Bus, Adj	1.00	1.00	1.00	1.00	1.00	1.00	1.00	1.00	1.00	1.00	1.00	1.00
Work Zone On Approach		No			No			No			No	
Adj Sat Flow, veh/h/ln	1772	1772	1772	1575	1772	1772	1575	1772	1772	1772	1772	1772
Adj Flow Rate, veh/h	5	869	516	334	852	2	702	11	395	1	3	10
Peak Hour Factor	0.93	0.93	0.93	0.93	0.93	0.93	0.93	0.93	0.93	0.93	0.93	0.93
Percent Heavy Veh, %	2	2	2	2	2	2	2	2	2	2	2	2
Cap, veh/h	31	2204	1047	334	1859	829	703	428	535	31	7	22
Arrive On Green	0.02	0.46	0.46	0.11	0.55	0.55	0.24	0.24	0.24	0.02	0.02	0.02
Sat Flow, veh/h	1688	4837	1502	2910	3367	1502	2910	1772	1502	1688	359	1197
Grp Volume(v), veh/h	5	869	516	334	852	2	702	11	395	1	0	13
Grp Sat Flow(s),veh/h/ln	1688	1612	1502	1455	1683	1502	1455	1772	1502	1688	0	1556
Q Serve(g_s), s	0.5	19.7	26.2	18.9	25.0	0.1	39.8	0.8	37.9	0.1	0.0	1.4
Cycle Q Clear(g_c), s	0.5	19.7	26.2	18.9	25.0	0.1	39.8	0.8	37.9	0.1	0.0	1.4
Prop In Lane	1.00		1.00	1.00		1.00	1.00		1.00	1.00		0.77
Lane Grp Cap(c), veh/h	31	2204	1047	334	1859	829	703	428	535	31	0	28
V/C Ratio(X)	0.16	0.39	0.49	1.00	0.46	0.00	1.00	0.03	0.74	0.03	0.00	0.46
Avail Cap(c_a), veh/h	31	2204	1047	406	1859	829	829	762	819	31	0	255
HCM Platoon Ratio	1.00	1.00	1.00	1.00	1.00	1.00	1.00	1.00	1.00	1.00	1.00	1.00
Upstream Filter(I)	1.00	1.00	1.00	1.00	1.00	1.00	0.84	0.84	0.84	1.00	0.00	1.00
Uniform Delay (d), s/veh	79.8	29.8	11.5	73.0	22.1	16.6	62.5	47.7	46.4	79.6	0.0	80.2
Incr Delay (d2), s/veh	2.5	0.5	1.7	40.2	0.8	0.0	26.0	0.0	0.6	0.4	0.0	11.2
Initial Q Delay(d3),s/veh	0.0	0.0	0.0	0.0	0.0	0.0	0.0	0.0	0.0	0.0	0.0	0.0
%ile BackOfQ(95%),veh/ln	0.4	12.1	13.4	13.7	14.9	0.1	23.2	0.6	19.6	0.1	0.0	1.2
Unsig. Movement Delay, s/veh												
LnGrp Delay(d),s/veh	82.2	30.3	13.2	113.2	23.0	16.6	88.5	47.8	47.0	80.0	0.0	91.4
LnGrp LOS	F	C	B	F	C	B	F	D	D	F	A	F
Approach Vol, veh/h		1390			1188			1108			14	
Approach Delay, s/veh		24.2			48.3			73.3			90.6	
Approach LOS		C			D			E			F	

Timer - Assigned Phs	1	2	3	4	5	6	7	8
Phs Duration (G+Y+Rc), s	26.0	82.2	46.9	10.0	10.0	98.1	10.0	46.9
Change Period (Y+Rc), s	5.0	5.0	5.0	5.0	5.0	5.0	5.0	5.0
Max Green Setting (Gmax), s	25.0	42.0	49.0	29.0	5.0	62.0	5.0	73.0
Max Q Clear Time (g_c+I1), s	20.9	28.2	41.8	3.4	2.5	27.0	2.1	39.9
Green Ext Time (p_c), s	0.0	0.8	0.1	0.0	0.0	0.8	0.0	0.1

Intersection Summary	
HCM 6th Ctrl Delay	46.9
HCM 6th LOS	D

Notes

User approved volume balancing among the lanes for turning movement.

Movement	EBL	EBT	EBR	WBL	WBT	WBR	NBL	NBT	NBR	SBL	SBT	SBR
Lane Configurations												
Traffic Volume (veh/h)	56	1348	683	375	944	7	689	40	236	46	36	56
Future Volume (veh/h)	56	1348	683	375	944	7	689	40	236	46	36	56
Initial Q (Qb), veh	0	0	0	0	0	0	0	0	0	0	0	0
Ped-Bike Adj(A_pbT)	1.00		1.00	1.00		1.00	1.00		1.00	1.00		1.00
Parking Bus, Adj	1.00	1.00	1.00	1.00	1.00	1.00	1.00	1.00	1.00	1.00	1.00	1.00
Work Zone On Approach		No			No			No			No	
Adj Sat Flow, veh/h/ln	1772	1772	1772	1575	1772	1772	1575	1772	1772	1772	1772	1772
Adj Flow Rate, veh/h	58	1390	704	387	973	7	710	41	243	47	37	58
Peak Hour Factor	0.97	0.97	0.97	0.97	0.97	0.97	0.97	0.97	0.97	0.97	0.97	0.97
Percent Heavy Veh, %	2	2	2	2	2	2	2	2	2	2	2	2
Cap, veh/h	59	2105	963	370	1776	792	600	424	551	48	38	60
Arrive On Green	0.03	0.44	0.44	0.13	0.53	0.53	0.21	0.24	0.24	0.03	0.06	0.06
Sat Flow, veh/h	1688	4837	1502	2910	3367	1502	2910	1772	1502	1688	622	975
Grp Volume(v), veh/h	58	1390	704	387	973	7	710	41	243	47	0	95
Grp Sat Flow(s),veh/h/ln	1688	1612	1502	1455	1683	1502	1455	1772	1502	1688	0	1596
Q Serve(g_s), s	5.7	37.6	52.2	21.0	31.7	0.4	34.0	3.0	20.2	4.6	0.0	9.8
Cycle Q Clear(g_c), s	5.7	37.6	52.2	21.0	31.7	0.4	34.0	3.0	20.2	4.6	0.0	9.8
Prop In Lane	1.00		1.00	1.00		1.00	1.00		1.00	1.00		0.61
Lane Grp Cap(c), veh/h	59	2105	963	370	1776	792	600	424	551	48	0	99
V/C Ratio(X)	0.99	0.66	0.73	1.04	0.55	0.01	1.18	0.10	0.44	0.98	0.00	0.96
Avail Cap(c_a), veh/h	215	2105	963	370	1776	792	600	424	551	348	0	261
HCM Platoon Ratio	1.00	1.00	1.00	1.00	1.00	1.00	1.00	1.00	1.00	1.00	1.00	1.00
Upstream Filter(I)	1.00	1.00	1.00	1.00	1.00	1.00	0.74	0.74	0.74	1.00	0.00	1.00
Uniform Delay (d), s/veh	79.6	36.9	20.0	72.0	25.9	18.5	65.5	48.9	39.5	80.1	0.0	77.2
Incr Delay (d2), s/veh	51.2	1.6	4.9	59.0	1.2	0.0	95.2	0.0	0.2	55.5	0.0	34.0
Initial Q Delay(d3),s/veh	0.0	0.0	0.0	0.0	0.0	0.0	0.0	0.0	0.0	0.0	0.0	0.0
%ile BackOfQ(95%),veh/ln	5.9	21.0	25.4	16.4	18.3	0.2	29.2	2.4	11.2	5.0	0.0	8.6
Unsig. Movement Delay, s/veh												
LnGrp Delay(d),s/veh	130.8	38.6	24.9	131.0	27.1	18.5	160.7	48.9	39.6	135.6	0.0	111.2
LnGrp LOS	F	D	C	F	C	B	F	D	D	F	A	F
Approach Vol, veh/h		2152			1367			994			142	
Approach Delay, s/veh		36.6			56.5			126.5			119.3	
Approach LOS		D			E			F			F	

Timer - Assigned Phs	1	2	3	4	5	6	7	8
Phs Duration (G+Y+Rc), s	28.0	78.8	41.0	17.2	12.7	94.1	11.7	46.5
Change Period (Y+Rc), s	5.0	5.0	5.0	5.0	5.0	5.0	5.0	5.0
Max Green Setting (Gmax), s	23.0	57.0	36.0	29.0	23.0	57.0	36.0	29.0
Max Q Clear Time (g_c+I1), s	23.0	54.2	36.0	11.8	7.7	33.7	6.6	22.2
Green Ext Time (p_c), s	0.0	0.8	0.0	0.4	0.1	1.0	0.1	0.0

Intersection Summary	
HCM 6th Ctrl Delay	64.1
HCM 6th LOS	E

Movement	EBL	EBT	EBR	WBL	WBT	WBR	NBL	NBT	NBR	SBL	SBT	SBR
Lane Configurations												
Traffic Volume (veh/h)	10	935	449	309	1011	2	714	12	387	3	4	12
Future Volume (veh/h)	10	935	449	309	1011	2	714	12	387	3	4	12
Initial Q (Qb), veh	0	0	0	0	0	0	0	0	0	0	0	0
Ped-Bike Adj(A_pbT)	1.00		1.00	1.00		1.00	1.00		1.00	1.00		1.00
Parking Bus, Adj	1.00	1.00	1.00	1.00	1.00	1.00	1.00	1.00	1.00	1.00	1.00	1.00
Work Zone On Approach		No			No			No			No	
Adj Sat Flow, veh/h/ln	1772	1772	1772	1575	1772	1772	1575	1772	1772	1772	1772	1772
Adj Flow Rate, veh/h	11	1005	483	332	1087	2	768	13	416	3	4	13
Peak Hour Factor	0.93	0.93	0.93	0.93	0.93	0.93	0.93	0.93	0.93	0.93	0.93	0.93
Percent Heavy Veh, %	2	2	2	2	2	2	2	2	2	2	2	2
Cap, veh/h	31	2098	1048	332	1783	795	769	468	568	31	7	22
Arrive On Green	0.02	0.43	0.43	0.11	0.53	0.53	0.26	0.26	0.26	0.02	0.02	0.02
Sat Flow, veh/h	1688	4837	1502	2910	3367	1502	2910	1772	1502	1688	366	1191
Grp Volume(v), veh/h	11	1005	483	332	1087	2	768	13	416	3	0	17
Grp Sat Flow(s),veh/h/ln	1688	1612	1502	1455	1683	1502	1455	1772	1502	1688	0	1558
Q Serve(g_s), s	1.1	24.5	23.6	18.8	37.0	0.1	43.5	0.9	39.3	0.3	0.0	1.8
Cycle Q Clear(g_c), s	1.1	24.5	23.6	18.8	37.0	0.1	43.5	0.9	39.3	0.3	0.0	1.8
Prop In Lane	1.00		1.00	1.00		1.00	1.00		1.00	1.00		0.76
Lane Grp Cap(c), veh/h	31	2098	1048	332	1783	795	769	468	568	31	0	28
V/C Ratio(X)	0.36	0.48	0.46	1.00	0.61	0.00	1.00	0.03	0.73	0.10	0.00	0.60
Avail Cap(c_a), veh/h	31	2098	1048	406	1783	795	829	762	818	31	0	255
HCM Platoon Ratio	1.00	1.00	1.00	1.00	1.00	1.00	1.00	1.00	1.00	1.00	1.00	1.00
Upstream Filter(I)	1.00	1.00	1.00	1.00	1.00	1.00	0.76	0.76	0.76	1.00	0.00	1.00
Uniform Delay (d), s/veh	80.0	33.4	11.1	73.1	26.9	18.3	60.7	45.0	44.1	79.7	0.0	80.4
Incr Delay (d2), s/veh	6.9	0.8	1.5	40.0	1.6	0.0	26.0	0.0	0.6	1.4	0.0	18.7
Initial Q Delay(d3),s/veh	0.0	0.0	0.0	0.0	0.0	0.0	0.0	0.0	0.0	0.0	0.0	0.0
%ile BackOfQ(95%),veh/ln	0.9	14.6	12.3	13.6	20.9	0.1	24.7	0.7	19.9	0.2	0.0	1.6
Unsig. Movement Delay, s/veh												
LnGrp Delay(d),s/veh	87.0	34.2	12.6	113.1	28.5	18.3	86.7	45.0	44.7	81.0	0.0	99.1
LnGrp LOS	F	C	B	F	C	B	F	D	D	F	A	F
Approach Vol, veh/h		1499			1421			1197			20	
Approach Delay, s/veh		27.6			48.3			71.6			96.4	
Approach LOS		C			D			E			F	

Timer - Assigned Phs	1	2	3	4	5	6	7	8
Phs Duration (G+Y+Rc), s	25.8	78.6	50.6	10.0	10.0	94.4	10.0	50.6
Change Period (Y+Rc), s	5.0	5.0	5.0	5.0	5.0	5.0	5.0	5.0
Max Green Setting (Gmax), s	25.0	42.0	49.0	29.0	5.0	62.0	5.0	73.0
Max Q Clear Time (g_c+I1), s	20.8	26.5	45.5	3.8	3.1	39.0	2.3	41.3
Green Ext Time (p_c), s	0.0	0.9	0.1	0.0	0.0	1.1	0.0	0.1

Intersection Summary	
HCM 6th Ctrl Delay	47.8
HCM 6th LOS	D

Notes

User approved volume balancing among the lanes for turning movement.

Movement	EBL	EBT	EBR	WBL	WBT	WBR	NBL	NBT	NBR	SBL	SBT	SBR
Lane Configurations												
Traffic Volume (veh/h)	72	1629	739	397	1154	7	662	47	232	61	42	73
Future Volume (veh/h)	72	1629	739	397	1154	7	662	47	232	61	42	73
Initial Q (Qb), veh	0	0	0	0	0	0	0	0	0	0	0	0
Ped-Bike Adj(A_pbT)	1.00		1.00	1.00		1.00	1.00		1.00	1.00		1.00
Parking Bus, Adj	1.00	1.00	1.00	1.00	1.00	1.00	1.00	1.00	1.00	1.00	1.00	1.00
Work Zone On Approach		No			No			No			No	
Adj Sat Flow, veh/h/ln	1772	1772	1772	1575	1772	1772	1575	1772	1772	1772	1772	1772
Adj Flow Rate, veh/h	74	1679	762	409	1190	7	682	48	239	63	43	75
Peak Hour Factor	0.97	0.97	0.97	0.97	0.97	0.97	0.97	0.97	0.97	0.97	0.97	0.97
Percent Heavy Veh, %	2	2	2	2	2	2	2	2	2	2	2	2
Cap, veh/h	75	2032	940	370	1693	755	600	434	559	64	45	78
Arrive On Green	0.04	0.42	0.42	0.13	0.50	0.50	0.21	0.24	0.24	0.04	0.08	0.08
Sat Flow, veh/h	1688	4837	1502	2910	3367	1502	2910	1772	1502	1688	579	1011
Grp Volume(v), veh/h	74	1679	762	409	1190	7	682	48	239	63	0	118
Grp Sat Flow(s),veh/h/ln	1688	1612	1502	1455	1683	1502	1455	1772	1502	1688	0	1590
Q Serve(g_s), s	7.2	50.9	63.6	21.0	44.8	0.4	34.0	3.5	19.6	6.2	0.0	12.2
Cycle Q Clear(g_c), s	7.2	50.9	63.6	21.0	44.8	0.4	34.0	3.5	19.6	6.2	0.0	12.2
Prop In Lane	1.00		1.00	1.00		1.00	1.00		1.00	1.00		0.64
Lane Grp Cap(c), veh/h	75	2032	940	370	1693	755	600	434	559	64	0	122
V/C Ratio(X)	0.99	0.83	0.81	1.10	0.70	0.01	1.14	0.11	0.43	0.98	0.00	0.96
Avail Cap(c_a), veh/h	215	2032	940	370	1693	755	600	434	559	348	0	260
HCM Platoon Ratio	1.00	1.00	1.00	1.00	1.00	1.00	1.00	1.00	1.00	1.00	1.00	1.00
Upstream Filter(I)	1.00	1.00	1.00	1.00	1.00	1.00	0.46	0.46	0.46	1.00	0.00	1.00
Uniform Delay (d), s/veh	78.8	42.5	23.4	72.0	31.5	20.5	65.5	48.4	38.7	79.3	0.0	75.9
Incr Delay (d2), s/veh	44.9	4.0	7.5	77.9	2.5	0.0	71.7	0.0	0.1	47.0	0.0	30.0
Initial Q Delay(d3),s/veh	0.0	0.0	0.0	0.0	0.0	0.0	0.0	0.0	0.0	0.0	0.0	0.0
%ile BackOfQ(95%),veh/ln	7.3	27.7	30.8	18.1	25.0	0.3	24.9	2.8	10.2	6.4	0.0	10.1
Unsig. Movement Delay, s/veh												
LnGrp Delay(d),s/veh	123.7	46.5	30.9	149.9	34.0	20.5	137.2	48.4	38.8	126.3	0.0	106.0
LnGrp LOS	F	D	C	F	C	C	F	D	D	F	A	F
Approach Vol, veh/h		2515			1606			969			181	
Approach Delay, s/veh		44.1			63.5			108.5			113.0	
Approach LOS		D			E			F			F	

Timer - Assigned Phs	1	2	3	4	5	6	7	8
Phs Duration (G+Y+Rc), s	28.0	76.3	41.0	19.7	14.3	90.0	13.3	47.4
Change Period (Y+Rc), s	5.0	5.0	5.0	5.0	5.0	5.0	5.0	5.0
Max Green Setting (Gmax), s	23.0	57.0	36.0	29.0	23.0	57.0	36.0	29.0
Max Q Clear Time (g_c+I1), s	23.0	65.6	36.0	14.2	9.2	46.8	8.2	21.6
Green Ext Time (p_c), s	0.0	0.0	0.0	0.5	0.1	1.2	0.1	0.1

Intersection Summary	
HCM 6th Ctrl Delay	64.2
HCM 6th LOS	E

Movement	EBL	EBT	EBR	WBL	WBT	WBR	NBL	NBT	NBR	SBL	SBT	SBR
Lane Configurations												
Traffic Volume (veh/h)	10	935	526	330	1011	2	735	12	393	3	4	12
Future Volume (veh/h)	10	935	526	330	1011	2	735	12	393	3	4	12
Initial Q (Qb), veh	0	0	0	0	0	0	0	0	0	0	0	0
Ped-Bike Adj(A_pbT)	1.00		1.00	1.00		1.00	1.00		1.00	1.00		1.00
Parking Bus, Adj	1.00	1.00	1.00	1.00	1.00	1.00	1.00	1.00	1.00	1.00	1.00	1.00
Work Zone On Approach		No			No			No			No	
Adj Sat Flow, veh/h/ln	1772	1772	1772	1575	1772	1772	1575	1772	1772	1772	1772	1772
Adj Flow Rate, veh/h	11	1005	566	355	1087	2	790	13	423	3	4	13
Peak Hour Factor	0.93	0.93	0.93	0.93	0.93	0.93	0.93	0.93	0.93	0.93	0.93	0.93
Percent Heavy Veh, %	2	2	2	2	2	2	2	2	2	2	2	2
Cap, veh/h	31	2023	1036	355	1758	784	791	482	591	31	7	22
Arrive On Green	0.02	0.42	0.42	0.12	0.52	0.52	0.27	0.27	0.27	0.02	0.02	0.02
Sat Flow, veh/h	1688	4837	1502	2910	3367	1502	2910	1772	1502	1688	366	1191
Grp Volume(v), veh/h	11	1005	566	355	1087	2	790	13	423	3	0	17
Grp Sat Flow(s),veh/h/ln	1688	1612	1502	1455	1683	1502	1455	1772	1502	1688	0	1558
Q Serve(g_s), s	1.1	25.2	30.9	20.1	37.6	0.1	44.8	0.9	39.2	0.3	0.0	1.8
Cycle Q Clear(g_c), s	1.1	25.2	30.9	20.1	37.6	0.1	44.8	0.9	39.2	0.3	0.0	1.8
Prop In Lane	1.00		1.00	1.00		1.00	1.00		1.00	1.00		0.76
Lane Grp Cap(c), veh/h	31	2023	1036	355	1758	784	791	482	591	31	0	28
V/C Ratio(X)	0.36	0.50	0.55	1.00	0.62	0.00	1.00	0.03	0.72	0.10	0.00	0.60
Avail Cap(c_a), veh/h	31	2023	1036	406	1758	784	829	762	830	31	0	255
HCM Platoon Ratio	1.00	1.00	1.00	1.00	1.00	1.00	1.00	1.00	1.00	1.00	1.00	1.00
Upstream Filter(I)	1.00	1.00	1.00	1.00	1.00	1.00	0.77	0.77	0.77	1.00	0.00	1.00
Uniform Delay (d), s/veh	80.0	35.2	12.7	72.4	27.8	18.9	60.1	44.1	42.2	79.7	0.0	80.4
Incr Delay (d2), s/veh	6.9	0.9	2.1	41.7	1.6	0.0	26.6	0.0	0.6	1.4	0.0	18.7
Initial Q Delay(d3),s/veh	0.0	0.0	0.0	0.0	0.0	0.0	0.0	0.0	0.0	0.0	0.0	0.0
%ile BackOfQ(95%),veh/ln	0.9	15.0	15.5	14.5	21.3	0.1	25.4	0.7	19.8	0.2	0.0	1.6
Unsig. Movement Delay, s/veh												
LnGrp Delay(d),s/veh	87.0	36.1	14.8	114.1	29.5	18.9	86.7	44.1	42.8	81.0	0.0	99.1
LnGrp LOS	F	D	B	F	C	B	F	D	D	F	A	F
Approach Vol, veh/h		1582			1444			1226			20	
Approach Delay, s/veh		28.8			50.2			71.1			96.4	
Approach LOS		C			D			E			F	

Timer - Assigned Phs	1	2	3	4	5	6	7	8
Phs Duration (G+Y+Rc), s	27.1	76.0	51.8	10.0	10.0	93.2	10.0	51.8
Change Period (Y+Rc), s	5.0	5.0	5.0	5.0	5.0	5.0	5.0	5.0
Max Green Setting (Gmax), s	25.0	42.0	49.0	29.0	5.0	62.0	5.0	73.0
Max Q Clear Time (g_c+I1), s	22.1	32.9	46.8	3.8	3.1	39.6	2.3	41.2
Green Ext Time (p_c), s	0.0	0.9	0.1	0.0	0.0	1.1	0.0	0.1

Intersection Summary	
HCM 6th Ctrl Delay	48.5
HCM 6th LOS	D

Notes

User approved volume balancing among the lanes for turning movement.

Movement	EBL	EBT	EBR	WBL	WBT	WBR	NBL	NBT	NBR	SBL	SBT	SBR
Lane Configurations												
Traffic Volume (veh/h)	72	1629	780	408	1154	7	768	47	260	61	42	73
Future Volume (veh/h)	72	1629	780	408	1154	7	768	47	260	61	42	73
Initial Q (Qb), veh	0	0	0	0	0	0	0	0	0	0	0	0
Ped-Bike Adj(A_pbT)	1.00		1.00	1.00		1.00	1.00		1.00	1.00		1.00
Parking Bus, Adj	1.00	1.00	1.00	1.00	1.00	1.00	1.00	1.00	1.00	1.00	1.00	1.00
Work Zone On Approach		No			No			No			No	
Adj Sat Flow, veh/h/ln	1772	1772	1772	1575	1772	1772	1575	1772	1772	1772	1772	1772
Adj Flow Rate, veh/h	74	1679	804	421	1190	7	792	48	268	63	43	75
Peak Hour Factor	0.97	0.97	0.97	0.97	0.97	0.97	0.97	0.97	0.97	0.97	0.97	0.97
Percent Heavy Veh, %	2	2	2	2	2	2	2	2	2	2	2	2
Cap, veh/h	75	2032	940	370	1693	755	600	434	559	64	45	78
Arrive On Green	0.04	0.42	0.42	0.13	0.50	0.50	0.21	0.24	0.24	0.04	0.08	0.08
Sat Flow, veh/h	1688	4837	1502	2910	3367	1502	2910	1772	1502	1688	579	1011
Grp Volume(v), veh/h	74	1679	804	421	1190	7	792	48	268	63	0	118
Grp Sat Flow(s),veh/h/ln	1688	1612	1502	1455	1683	1502	1455	1772	1502	1688	0	1590
Q Serve(g_s), s	7.2	50.9	69.3	21.0	44.8	0.4	34.0	3.5	22.5	6.2	0.0	12.2
Cycle Q Clear(g_c), s	7.2	50.9	69.3	21.0	44.8	0.4	34.0	3.5	22.5	6.2	0.0	12.2
Prop In Lane	1.00		1.00	1.00		1.00	1.00		1.00	1.00		0.64
Lane Grp Cap(c), veh/h	75	2032	940	370	1693	755	600	434	559	64	0	122
V/C Ratio(X)	0.99	0.83	0.86	1.14	0.70	0.01	1.32	0.11	0.48	0.98	0.00	0.96
Avail Cap(c_a), veh/h	215	2032	940	370	1693	755	600	434	559	348	0	260
HCM Platoon Ratio	1.00	1.00	1.00	1.00	1.00	1.00	1.00	1.00	1.00	1.00	1.00	1.00
Upstream Filter(I)	1.00	1.00	1.00	1.00	1.00	1.00	0.47	0.47	0.47	1.00	0.00	1.00
Uniform Delay (d), s/veh	78.8	42.5	24.8	72.0	31.5	20.5	65.5	48.4	39.6	79.3	0.0	75.9
Incr Delay (d2), s/veh	44.9	4.0	9.8	89.3	2.5	0.0	149.9	0.0	0.1	47.0	0.0	30.0
Initial Q Delay(d3),s/veh	0.0	0.0	0.0	0.0	0.0	0.0	0.0	0.0	0.0	0.0	0.0	0.0
%ile BackOfQ(95%),veh/ln	7.3	27.7	34.4	19.0	25.0	0.3	35.2	2.8	11.5	6.4	0.0	10.1
Unsig. Movement Delay, s/veh												
LnGrp Delay(d),s/veh	123.7	46.5	34.7	161.3	34.0	20.5	215.4	48.4	39.7	126.3	0.0	106.0
LnGrp LOS	F	D	C	F	C	C	F	D	D	F	A	F
Approach Vol, veh/h		2557			1618			1108			181	
Approach Delay, s/veh		45.0			67.1			165.7			113.0	
Approach LOS		D			E			F			F	

Timer - Assigned Phs	1	2	3	4	5	6	7	8
Phs Duration (G+Y+Rc), s	28.0	76.3	41.0	19.7	14.3	90.0	13.3	47.4
Change Period (Y+Rc), s	5.0	5.0	5.0	5.0	5.0	5.0	5.0	5.0
Max Green Setting (Gmax), s	23.0	57.0	36.0	29.0	23.0	57.0	36.0	29.0
Max Q Clear Time (g_c+I1), s	23.0	71.3	36.0	14.2	9.2	46.8	8.2	24.5
Green Ext Time (p_c), s	0.0	0.0	0.0	0.5	0.1	1.2	0.1	0.0

Intersection Summary	
HCM 6th Ctrl Delay	78.3
HCM 6th LOS	E

Intersection	
Int Delay, s/veh	4.6

Movement	EBL	EBT	EBR	WBL	WBT	WBR	NBL	NBT	NBR	SBL	SBT	SBR
Lane Configurations												
Traffic Vol, veh/h	0	0	0	34	0	182	0	912	32	77	571	0
Future Vol, veh/h	0	0	0	34	0	182	0	912	32	77	571	0
Conflicting Peds, #/hr	0	0	0	0	0	0	0	0	0	0	0	0
Sign Control	Stop	Stop	Stop	Stop	Stop	Stop	Free	Free	Free	Free	Free	Free
RT Channelized	-	-	None	-	-	None	-	-	None	-	-	None
Storage Length	-	-	-	-	-	100	-	-	-	195	-	-
Veh in Median Storage, #	-	0	-	-	0	-	-	0	-	-	0	-
Grade, %	-	0	-	-	0	-	-	0	-	-	0	-
Peak Hour Factor	87	87	87	87	87	87	87	87	87	87	87	87
Heavy Vehicles, %	2	2	2	2	2	2	2	2	2	2	2	2
Mvmt Flow	0	0	0	39	0	209	0	1048	37	89	656	0

Major/Minor	Minor2			Minor1			Major1			Major2		
Conflicting Flow All	1358	1919	328	1573	1901	543	656	0	0	1085	0	0
Stage 1	834	834	-	1067	1067	-	-	-	-	-	-	-
Stage 2	524	1085	-	506	834	-	-	-	-	-	-	-
Critical Hdwy	7.54	6.54	6.94	7.54	6.54	6.94	4.14	-	-	4.14	-	-
Critical Hdwy Stg 1	6.54	5.54	-	6.54	5.54	-	-	-	-	-	-	-
Critical Hdwy Stg 2	6.54	5.54	-	6.54	5.54	-	-	-	-	-	-	-
Follow-up Hdwy	3.52	4.02	3.32	3.52	4.02	3.32	2.22	-	-	2.22	-	-
Pot Cap-1 Maneuver	107	67	668	74	68	484	927	-	-	639	-	-
Stage 1	329	381	-	237	297	-	-	-	-	-	-	-
Stage 2	504	291	-	517	381	-	-	-	-	-	-	-
Platoon blocked, %								-	-		-	-
Mov Cap-1 Maneuver	54	58	668	66	59	484	927	-	-	639	-	-
Mov Cap-2 Maneuver	54	58	-	66	59	-	-	-	-	-	-	-
Stage 1	329	328	-	237	297	-	-	-	-	-	-	-
Stage 2	286	291	-	445	328	-	-	-	-	-	-	-

Approach	EB	WB	NB	SB
HCM Control Delay, s	0	33.9	0	1.4
HCM LOS	A	D		

Minor Lane/Major Mvmt	NBL	NBT	NBR	EBLn1	WBLn1	WBLn2	SBL	SBT	SBR
Capacity (veh/h)	927	-	-	-	66	484	639	-	-
HCM Lane V/C Ratio	-	-	-	-	0.592	0.432	0.139	-	-
HCM Control Delay (s)	0	-	-	0	119.3	18	11.5	-	-
HCM Lane LOS	A	-	-	A	F	C	B	-	-
HCM 95th %tile Q(veh)	0	-	-	-	2.5	2.1	0.5	-	-

Intersection	
Int Delay, s/veh	3

Movement	EBL	EBT	EBR	WBL	WBT	WBR	NBL	NBT	NBR	SBL	SBT	SBR
Lane Configurations												
Traffic Vol, veh/h	0	0	0	14	0	149	0	604	11	222	731	0
Future Vol, veh/h	0	0	0	14	0	149	0	604	11	222	731	0
Conflicting Peds, #/hr	0	0	0	0	0	0	0	0	0	0	0	0
Sign Control	Stop	Stop	Stop	Stop	Stop	Stop	Free	Free	Free	Free	Free	Free
RT Channelized	-	-	None	-	-	None	-	-	None	-	-	None
Storage Length	-	-	-	-	-	100	-	-	-	195	-	-
Veh in Median Storage, #	-	0	-	-	0	-	-	0	-	-	0	-
Grade, %	-	0	-	-	0	-	-	0	-	-	0	-
Peak Hour Factor	93	93	93	93	93	93	93	93	93	93	93	93
Heavy Vehicles, %	2	2	2	2	2	2	2	2	2	2	2	2
Mvmt Flow	0	0	0	15	0	160	0	649	12	239	786	0

Major/Minor	Minor2			Minor1			Major1			Major2		
Conflicting Flow All	1589	1925	393	1526	1919	331	786	0	0	661	0	0
Stage 1	1264	1264	-	655	655	-	-	-	-	-	-	-
Stage 2	325	661	-	871	1264	-	-	-	-	-	-	-
Critical Hdwy	7.54	6.54	6.94	7.54	6.54	6.94	4.14	-	-	4.14	-	-
Critical Hdwy Stg 1	6.54	5.54	-	6.54	5.54	-	-	-	-	-	-	-
Critical Hdwy Stg 2	6.54	5.54	-	6.54	5.54	-	-	-	-	-	-	-
Follow-up Hdwy	3.52	4.02	3.32	3.52	4.02	3.32	2.22	-	-	2.22	-	-
Pot Cap-1 Maneuver	72	66	606	81	67	665	829	-	-	923	-	-
Stage 1	179	239	-	421	461	-	-	-	-	-	-	-
Stage 2	661	458	-	312	239	-	-	-	-	-	-	-
Platoon blocked, %								-	-		-	-
Mov Cap-1 Maneuver	44	49	606	65	50	665	829	-	-	923	-	-
Mov Cap-2 Maneuver	44	49	-	65	50	-	-	-	-	-	-	-
Stage 1	179	177	-	421	461	-	-	-	-	-	-	-
Stage 2	502	458	-	231	177	-	-	-	-	-	-	-

Approach	EB	WB	NB	SB
HCM Control Delay, s	0	17.6	0	2.4
HCM LOS	A	C		

Minor Lane/Major Mvmt	NBL	NBT	NBR	EBLn1	WBLn1	WBLn2	SBL	SBT	SBR
Capacity (veh/h)	829	-	-	-	65	665	923	-	-
HCM Lane V/C Ratio	-	-	-	-	0.232	0.241	0.259	-	-
HCM Control Delay (s)	0	-	-	0	76.3	12.1	10.3	-	-
HCM Lane LOS	A	-	-	A	F	B	B	-	-
HCM 95th %tile Q(veh)	0	-	-	-	0.8	0.9	1	-	-

Intersection	
Int Delay, s/veh	4.6

Movement	EBL	EBT	EBR	WBL	WBT	WBR	NBL	NBT	NBR	SBL	SBT	SBR
Lane Configurations												
Traffic Vol, veh/h	0	0	0	34	0	182	0	917	32	77	572	0
Future Vol, veh/h	0	0	0	34	0	182	0	917	32	77	572	0
Conflicting Peds, #/hr	0	0	0	0	0	0	0	0	0	0	0	0
Sign Control	Stop	Stop	Stop	Stop	Stop	Stop	Free	Free	Free	Free	Free	Free
RT Channelized	-	-	None	-	-	None	-	-	None	-	-	None
Storage Length	-	-	-	-	-	100	-	-	-	195	-	-
Veh in Median Storage, #	-	0	-	-	0	-	-	0	-	-	0	-
Grade, %	-	0	-	-	0	-	-	0	-	-	0	-
Peak Hour Factor	87	87	87	87	87	87	87	87	87	87	87	87
Heavy Vehicles, %	2	2	2	2	2	2	2	2	2	2	2	2
Mvmt Flow	0	0	0	39	0	209	0	1054	37	89	657	0

Major/Minor	Minor2			Minor1			Major1			Major2		
Conflicting Flow All	1362	1926	329	1580	1908	546	657	0	0	1091	0	0
Stage 1	835	835	-	1073	1073	-	-	-	-	-	-	-
Stage 2	527	1091	-	507	835	-	-	-	-	-	-	-
Critical Hdwy	7.54	6.54	6.94	7.54	6.54	6.94	4.14	-	-	4.14	-	-
Critical Hdwy Stg 1	6.54	5.54	-	6.54	5.54	-	-	-	-	-	-	-
Critical Hdwy Stg 2	6.54	5.54	-	6.54	5.54	-	-	-	-	-	-	-
Follow-up Hdwy	3.52	4.02	3.32	3.52	4.02	3.32	2.22	-	-	2.22	-	-
Pot Cap-1 Maneuver	107	66	667	73	68	482	926	-	-	635	-	-
Stage 1	328	381	-	235	295	-	-	-	-	-	-	-
Stage 2	502	289	-	516	381	-	-	-	-	-	-	-
Platoon blocked, %								-	-		-	-
Mov Cap-1 Maneuver	54	57	667	65	58	482	926	-	-	635	-	-
Mov Cap-2 Maneuver	54	57	-	65	58	-	-	-	-	-	-	-
Stage 1	328	328	-	235	295	-	-	-	-	-	-	-
Stage 2	284	289	-	444	328	-	-	-	-	-	-	-

Approach	EB	WB	NB	SB
HCM Control Delay, s	0	34.5	0	1.4
HCM LOS	A	D		

Minor Lane/Major Mvmt	NBL	NBT	NBR	EBLn1	WBLn1	WBLn2	SBL	SBT	SBR
Capacity (veh/h)	926	-	-	-	65	482	635	-	-
HCM Lane V/C Ratio	-	-	-	-	0.601	0.434	0.139	-	-
HCM Control Delay (s)	0	-	-	0	122.4	18.1	11.6	-	-
HCM Lane LOS	A	-	-	A	F	C	B	-	-
HCM 95th %tile Q(veh)	0	-	-	-	2.5	2.2	0.5	-	-

Intersection	
Int Delay, s/veh	3

Movement	EBL	EBT	EBR	WBL	WBT	WBR	NBL	NBT	NBR	SBL	SBT	SBR
Lane Configurations												
Traffic Vol, veh/h	0	0	0	14	0	149	0	607	11	222	738	0
Future Vol, veh/h	0	0	0	14	0	149	0	607	11	222	738	0
Conflicting Peds, #/hr	0	0	0	0	0	0	0	0	0	0	0	0
Sign Control	Stop	Stop	Stop	Stop	Stop	Stop	Free	Free	Free	Free	Free	Free
RT Channelized	-	-	None	-	-	None	-	-	None	-	-	None
Storage Length	-	-	-	-	-	100	-	-	-	195	-	-
Veh in Median Storage, #	-	0	-	-	0	-	-	0	-	-	0	-
Grade, %	-	0	-	-	0	-	-	0	-	-	0	-
Peak Hour Factor	93	93	93	93	93	93	93	93	93	93	93	93
Heavy Vehicles, %	2	2	2	2	2	2	2	2	2	2	2	2
Mvmt Flow	0	0	0	15	0	160	0	653	12	239	794	0

Major/Minor	Minor2			Minor1			Major1			Major2		
Conflicting Flow All	1599	1937	397	1534	1931	333	794	0	0	665	0	0
Stage 1	1272	1272	-	659	659	-	-	-	-	-	-	-
Stage 2	327	665	-	875	1272	-	-	-	-	-	-	-
Critical Hdwy	7.54	6.54	6.94	7.54	6.54	6.94	4.14	-	-	4.14	-	-
Critical Hdwy Stg 1	6.54	5.54	-	6.54	5.54	-	-	-	-	-	-	-
Critical Hdwy Stg 2	6.54	5.54	-	6.54	5.54	-	-	-	-	-	-	-
Follow-up Hdwy	3.52	4.02	3.32	3.52	4.02	3.32	2.22	-	-	2.22	-	-
Pot Cap-1 Maneuver	71	65	602	79	65	663	823	-	-	920	-	-
Stage 1	177	237	-	419	459	-	-	-	-	-	-	-
Stage 2	660	456	-	310	237	-	-	-	-	-	-	-
Platoon blocked, %								-	-		-	-
Mov Cap-1 Maneuver	43	48	602	63	48	663	823	-	-	920	-	-
Mov Cap-2 Maneuver	43	48	-	63	48	-	-	-	-	-	-	-
Stage 1	177	175	-	419	459	-	-	-	-	-	-	-
Stage 2	501	456	-	229	175	-	-	-	-	-	-	-

Approach	EB	WB	NB	SB
HCM Control Delay, s	0	18	0	2.4
HCM LOS	A	C		

Minor Lane/Major Mvmt	NBL	NBT	NBR	EBLn1	WBLn1	WBLn2	SBL	SBT	SBR
Capacity (veh/h)	823	-	-	-	63	663	920	-	-
HCM Lane V/C Ratio	-	-	-	-	0.239	0.242	0.259	-	-
HCM Control Delay (s)	0	-	-	0	79.2	12.2	10.3	-	-
HCM Lane LOS	A	-	-	A	F	B	B	-	-
HCM 95th %tile Q(veh)	0	-	-	-	0.8	0.9	1	-	-

Intersection	
Int Delay, s/veh	6.4

Movement	EBL	EBT	EBR	WBL	WBT	WBR	NBL	NBT	NBR	SBL	SBT	SBR
Lane Configurations												
Traffic Vol, veh/h	0	0	0	35	0	189	0	1031	33	80	645	0
Future Vol, veh/h	0	0	0	35	0	189	0	1031	33	80	645	0
Conflicting Peds, #/hr	0	0	0	0	0	0	0	0	0	0	0	0
Sign Control	Stop	Stop	Stop	Stop	Stop	Stop	Free	Free	Free	Free	Free	Free
RT Channelized	-	-	None	-	-	None	-	-	None	-	-	None
Storage Length	-	-	-	-	-	100	-	-	-	195	-	-
Veh in Median Storage, #	-	0	-	-	0	-	-	0	-	-	0	-
Grade, %	-	0	-	-	0	-	-	0	-	-	0	-
Peak Hour Factor	87	87	87	87	87	87	87	87	87	87	87	87
Heavy Vehicles, %	2	2	2	2	2	2	2	2	2	2	2	2
Mvmt Flow	0	0	0	40	0	217	0	1185	38	92	741	0

Major/Minor	Minor2			Minor1			Major1			Major2		
Conflicting Flow All	1518	2148	371	1759	2129	612	741	0	0	1223	0	0
Stage 1	925	925	-	1204	1204	-	-	-	-	-	-	-
Stage 2	593	1223	-	555	925	-	-	-	-	-	-	-
Critical Hdwy	7.54	6.54	6.94	7.54	6.54	6.94	4.14	-	-	4.14	-	-
Critical Hdwy Stg 1	6.54	5.54	-	6.54	5.54	-	-	-	-	-	-	-
Critical Hdwy Stg 2	6.54	5.54	-	6.54	5.54	-	-	-	-	-	-	-
Follow-up Hdwy	3.52	4.02	3.32	3.52	4.02	3.32	2.22	-	-	2.22	-	-
Pot Cap-1 Maneuver	82	48	626	54	49	436	862	-	-	566	-	-
Stage 1	290	346	-	195	255	-	-	-	-	-	-	-
Stage 2	459	250	-	484	346	-	-	-	-	-	-	-
Platoon blocked, %								-	-		-	-
Mov Cap-1 Maneuver	36	40	626	47	41	436	862	-	-	566	-	-
Mov Cap-2 Maneuver	36	40	-	47	41	-	-	-	-	-	-	-
Stage 1	290	290	-	195	255	-	-	-	-	-	-	-
Stage 2	230	250	-	405	290	-	-	-	-	-	-	-

Approach	EB	WB	NB	SB
HCM Control Delay, s	0	52.9	0	1.4
HCM LOS	A	F		

Minor Lane/Major Mvmt	NBL	NBT	NBR	EBLn1	WBLn1	WBLn2	SBL	SBT	SBR
Capacity (veh/h)	862	-	-	-	47	436	566	-	-
HCM Lane V/C Ratio	-	-	-	-	0.856	0.498	0.162	-	-
HCM Control Delay (s)	0	-	-	0	224	21.2	12.6	-	-
HCM Lane LOS	A	-	-	A	F	C	B	-	-
HCM 95th %tile Q(veh)	0	-	-	-	3.5	2.7	0.6	-	-

Intersection	
Int Delay, s/veh	3.3

Movement	EBL	EBT	EBR	WBL	WBT	WBR	NBL	NBT	NBR	SBL	SBT	SBR
Lane Configurations												
Traffic Vol, veh/h	0	0	0	15	0	155	0	714	11	231	867	0
Future Vol, veh/h	0	0	0	15	0	155	0	714	11	231	867	0
Conflicting Peds, #/hr	0	0	0	0	0	0	0	0	0	0	0	0
Sign Control	Stop	Stop	Stop	Stop	Stop	Stop	Free	Free	Free	Free	Free	Free
RT Channelized	-	-	None	-	-	None	-	-	None	-	-	None
Storage Length	-	-	-	-	-	100	-	-	-	195	-	-
Veh in Median Storage, #	-	0	-	-	0	-	-	0	-	-	0	-
Grade, %	-	0	-	-	0	-	-	0	-	-	0	-
Peak Hour Factor	93	93	93	93	93	93	93	93	93	93	93	93
Heavy Vehicles, %	2	2	2	2	2	2	2	2	2	2	2	2
Mvmt Flow	0	0	0	16	0	167	0	768	12	248	932	0

Major/Minor	Minor2			Minor1			Major1			Major2		
Conflicting Flow All	1812	2208	466	1736	2202	390	932	0	0	780	0	0
Stage 1	1428	1428	-	774	774	-	-	-	-	-	-	-
Stage 2	384	780	-	962	1428	-	-	-	-	-	-	-
Critical Hdwy	7.54	6.54	6.94	7.54	6.54	6.94	4.14	-	-	4.14	-	-
Critical Hdwy Stg 1	6.54	5.54	-	6.54	5.54	-	-	-	-	-	-	-
Critical Hdwy Stg 2	6.54	5.54	-	6.54	5.54	-	-	-	-	-	-	-
Follow-up Hdwy	3.52	4.02	3.32	3.52	4.02	3.32	2.22	-	-	2.22	-	-
Pot Cap-1 Maneuver	49	44	543	56	44	609	730	-	-	833	-	-
Stage 1	142	199	-	357	406	-	-	-	-	-	-	-
Stage 2	611	404	-	275	199	-	-	-	-	-	-	-
Platoon blocked, %								-	-		-	-
Mov Cap-1 Maneuver	27	31	543	43	31	609	730	-	-	833	-	-
Mov Cap-2 Maneuver	27	31	-	43	31	-	-	-	-	-	-	-
Stage 1	142	140	-	357	406	-	-	-	-	-	-	-
Stage 2	444	404	-	193	140	-	-	-	-	-	-	-

Approach	EB	WB	NB	SB
HCM Control Delay, s	0	23.6	0	2.3
HCM LOS	A	C		

Minor Lane/Major Mvmt	NBL	NBT	NBR	EBLn1	WBLn1	WBLn2	SBL	SBT	SBR
Capacity (veh/h)	730	-	-	-	43	609	833	-	-
HCM Lane V/C Ratio	-	-	-	-	0.375	0.274	0.298	-	-
HCM Control Delay (s)	0	-	-	0	132.2	13.1	11.1	-	-
HCM Lane LOS	A	-	-	A	F	B	B	-	-
HCM 95th %tile Q(veh)	0	-	-	-	1.3	1.1	1.3	-	-

Intersection	
Int Delay, s/veh	6.5

Movement	EBL	EBT	EBR	WBL	WBT	WBR	NBL	NBT	NBR	SBL	SBT	SBR
Lane Configurations												
Traffic Vol, veh/h	0	0	0	35	0	189	0	1036	33	80	646	0
Future Vol, veh/h	0	0	0	35	0	189	0	1036	33	80	646	0
Conflicting Peds, #/hr	0	0	0	0	0	0	0	0	0	0	0	0
Sign Control	Stop	Stop	Stop	Stop	Stop	Stop	Free	Free	Free	Free	Free	Free
RT Channelized	-	-	None	-	-	None	-	-	None	-	-	None
Storage Length	-	-	-	-	-	100	-	-	-	195	-	-
Veh in Median Storage, #	-	0	-	-	0	-	-	0	-	-	0	-
Grade, %	-	0	-	-	0	-	-	0	-	-	0	-
Peak Hour Factor	87	87	87	87	87	87	87	87	87	87	87	87
Heavy Vehicles, %	2	2	2	2	2	2	2	2	2	2	2	2
Mvmt Flow	0	0	0	40	0	217	0	1191	38	92	743	0

Major/Minor	Minor2			Minor1			Major1			Major2		
Conflicting Flow All	1523	2156	372	1766	2137	615	743	0	0	1229	0	0
Stage 1	927	927	-	1210	1210	-	-	-	-	-	-	-
Stage 2	596	1229	-	556	927	-	-	-	-	-	-	-
Critical Hdwy	7.54	6.54	6.94	7.54	6.54	6.94	4.14	-	-	4.14	-	-
Critical Hdwy Stg 1	6.54	5.54	-	6.54	5.54	-	-	-	-	-	-	-
Critical Hdwy Stg 2	6.54	5.54	-	6.54	5.54	-	-	-	-	-	-	-
Follow-up Hdwy	3.52	4.02	3.32	3.52	4.02	3.32	2.22	-	-	2.22	-	-
Pot Cap-1 Maneuver	81	47	625	53	48	434	860	-	-	563	-	-
Stage 1	289	345	-	194	254	-	-	-	-	-	-	-
Stage 2	457	248	-	483	345	-	-	-	-	-	-	-
Platoon blocked, %								-	-		-	-
Mov Cap-1 Maneuver	35	39	625	46	40	434	860	-	-	563	-	-
Mov Cap-2 Maneuver	35	39	-	46	40	-	-	-	-	-	-	-
Stage 1	289	289	-	194	254	-	-	-	-	-	-	-
Stage 2	228	248	-	404	289	-	-	-	-	-	-	-

Approach	EB	WB	NB	SB
HCM Control Delay, s	0	54.3	0	1.4
HCM LOS	A	F		

Minor Lane/Major Mvmt	NBL	NBT	NBR	EBLn1	WBLn1	WBLn2	SBL	SBT	SBR
Capacity (veh/h)	860	-	-	-	46	434	563	-	-
HCM Lane V/C Ratio	-	-	-	-	0.875	0.501	0.163	-	-
HCM Control Delay (s)	0	-	-	0	232.8	21.3	12.6	-	-
HCM Lane LOS	A	-	-	A	F	C	B	-	-
HCM 95th %tile Q(veh)	0	-	-	-	3.5	2.7	0.6	-	-

Intersection	
Int Delay, s/veh	3.3

Movement	EBL	EBT	EBR	WBL	WBT	WBR	NBL	NBT	NBR	SBL	SBT	SBR
Lane Configurations												
Traffic Vol, veh/h	0	0	0	15	0	155	0	717	11	231	874	0
Future Vol, veh/h	0	0	0	15	0	155	0	717	11	231	874	0
Conflicting Peds, #/hr	0	0	0	0	0	0	0	0	0	0	0	0
Sign Control	Stop	Stop	Stop	Stop	Stop	Stop	Free	Free	Free	Free	Free	Free
RT Channelized	-	-	None	-	-	None	-	-	None	-	-	None
Storage Length	-	-	-	-	-	100	-	-	-	195	-	-
Veh in Median Storage, #	-	0	-	-	0	-	-	0	-	-	0	-
Grade, %	-	0	-	-	0	-	-	0	-	-	0	-
Peak Hour Factor	93	93	93	93	93	93	93	93	93	93	93	93
Heavy Vehicles, %	2	2	2	2	2	2	2	2	2	2	2	2
Mvmt Flow	0	0	0	16	0	167	0	771	12	248	940	0

Major/Minor	Minor2			Minor1			Major1			Major2		
Conflicting Flow All	1822	2219	470	1743	2213	392	940	0	0	783	0	0
Stage 1	1436	1436	-	777	777	-	-	-	-	-	-	-
Stage 2	386	783	-	966	1436	-	-	-	-	-	-	-
Critical Hdwy	7.54	6.54	6.94	7.54	6.54	6.94	4.14	-	-	4.14	-	-
Critical Hdwy Stg 1	6.54	5.54	-	6.54	5.54	-	-	-	-	-	-	-
Critical Hdwy Stg 2	6.54	5.54	-	6.54	5.54	-	-	-	-	-	-	-
Follow-up Hdwy	3.52	4.02	3.32	3.52	4.02	3.32	2.22	-	-	2.22	-	-
Pot Cap-1 Maneuver	48	43	540	55	43	607	725	-	-	831	-	-
Stage 1	140	197	-	356	405	-	-	-	-	-	-	-
Stage 2	609	403	-	273	197	-	-	-	-	-	-	-
Platoon blocked, %								-	-		-	-
Mov Cap-1 Maneuver	27	30	540	42	30	607	725	-	-	831	-	-
Mov Cap-2 Maneuver	27	30	-	42	30	-	-	-	-	-	-	-
Stage 1	140	138	-	356	405	-	-	-	-	-	-	-
Stage 2	442	403	-	192	138	-	-	-	-	-	-	-

Approach	EB	WB	NB	SB
HCM Control Delay, s	0	24.1	0	2.3
HCM LOS	A	C		

Minor Lane/Major Mvmt	NBL	NBT	NBR	EBLn1	WBLn1	WBLn2	SBL	SBT	SBR
Capacity (veh/h)	725	-	-	-	42	607	831	-	-
HCM Lane V/C Ratio	-	-	-	-	0.384	0.275	0.299	-	-
HCM Control Delay (s)	0	-	-	0	136.6	13.2	11.2	-	-
HCM Lane LOS	A	-	-	A	F	B	B	-	-
HCM 95th %tile Q(veh)	0	-	-	-	1.3	1.1	1.3	-	-

Movement	EBL	EBT	EBR	WBL	WBT	WBR	NBL	NBT	NBR	SBL	SBT	SBR
Lane Configurations												
Traffic Volume (veh/h)	61	955	103	27	986	86	198	82	46	100	64	81
Future Volume (veh/h)	61	955	103	27	986	86	198	82	46	100	64	81
Initial Q (Qb), veh	0	0	0	0	0	0	0	0	0	0	0	0
Ped-Bike Adj(A_pbT)	1.00		1.00	1.00		1.00	1.00		1.00	1.00		1.00
Parking Bus, Adj	1.00	1.00	1.00	1.00	1.00	1.00	1.00	1.00	1.00	1.00	1.00	1.00
Work Zone On Approach		No			No			No			No	
Adj Sat Flow, veh/h/ln	1673	1772	1772	1673	1772	1772	1673	1772	1772	1673	1772	1772
Adj Flow Rate, veh/h	71	1110	120	31	1147	100	230	95	53	116	74	94
Peak Hour Factor	0.86	0.86	0.86	0.86	0.86	0.86	0.86	0.86	0.86	0.86	0.86	0.86
Percent Heavy Veh, %	2	2	2	2	2	2	2	2	2	2	2	2
Cap, veh/h	71	1515	676	40	1349	117	293	280	156	313	186	236
Arrive On Green	0.04	0.45	0.45	0.03	0.43	0.43	0.26	0.26	0.26	0.26	0.26	0.26
Sat Flow, veh/h	1594	3367	1502	1594	3133	273	1150	1069	596	1171	709	901
Grp Volume(v), veh/h	71	1110	120	31	616	631	230	0	148	116	0	168
Grp Sat Flow(s),veh/h/ln	1594	1683	1502	1594	1683	1723	1150	0	1665	1171	0	1610
Q Serve(g_s), s	3.6	21.6	3.8	1.5	26.3	26.4	14.1	0.0	5.8	7.1	0.0	6.9
Cycle Q Clear(g_c), s	3.6	21.6	3.8	1.5	26.3	26.4	21.0	0.0	5.8	12.9	0.0	6.9
Prop In Lane	1.00		1.00	1.00		0.16	1.00		0.36	1.00		0.56
Lane Grp Cap(c), veh/h	71	1515	676	40	725	742	293	0	437	313	0	423
V/C Ratio(X)	1.00	0.73	0.18	0.78	0.85	0.85	0.78	0.00	0.34	0.37	0.00	0.40
Avail Cap(c_a), veh/h	80	1515	676	80	725	742	293	0	437	313	0	423
HCM Platoon Ratio	1.00	1.00	1.00	1.00	1.00	1.00	1.00	1.00	1.00	1.00	1.00	1.00
Upstream Filter(I)	1.00	1.00	1.00	1.00	1.00	1.00	1.00	0.00	1.00	1.00	0.00	1.00
Uniform Delay (d), s/veh	38.2	18.1	13.2	38.8	20.5	20.5	33.8	0.0	23.9	29.1	0.0	24.3
Incr Delay (d2), s/veh	95.4	3.2	0.6	11.4	11.9	11.8	12.1	0.0	0.2	0.3	0.0	0.2
Initial Q Delay(d3),s/veh	0.0	0.0	0.0	0.0	0.0	0.0	0.0	0.0	0.0	0.0	0.0	0.0
%ile BackOfQ(95%),veh/ln	5.7	12.2	2.2	1.2	16.4	16.8	9.0	0.0	3.8	3.4	0.0	4.4
Unsig. Movement Delay, s/veh												
LnGrp Delay(d),s/veh	133.6	21.2	13.7	50.2	32.4	32.3	45.8	0.0	24.0	29.4	0.0	24.5
LnGrp LOS	F	C	B	D	C	C	D	A	C	C	A	C
Approach Vol, veh/h		1301			1278			378			284	
Approach Delay, s/veh		26.7			32.8			37.3			26.5	
Approach LOS		C			C			D			C	

Timer - Assigned Phs	1	2		4	5	6		8
Phs Duration (G+Y+Rc), s	8.0	44.0		28.0	9.6	42.4		28.0
Change Period (Y+Rc), s	4.0	6.0		5.0	4.0	6.0		5.0
Max Green Setting (Gmax), s	6.0	36.0		23.0	6.0	36.0		23.0
Max Q Clear Time (g_c+I1), s	3.5	23.6		14.9	5.6	28.4		23.0
Green Ext Time (p_c), s	0.0	5.9		0.5	0.0	4.2		0.0

Intersection Summary		
HCM 6th Ctrl Delay		30.3
HCM 6th LOS		C

Movement	EBL	EBT	EBR	WBL	WBT	WBR	NBL	NBT	NBR	SBL	SBT	SBR
Lane Configurations												
Traffic Volume (veh/h)	57	1398	274	90	1127	54	162	30	82	55	49	50
Future Volume (veh/h)	57	1398	274	90	1127	54	162	30	82	55	49	50
Initial Q (Qb), veh	0	0	0	0	0	0	0	0	0	0	0	0
Ped-Bike Adj(A_pbT)	1.00		1.00	1.00		1.00	1.00		1.00	1.00		1.00
Parking Bus, Adj	1.00	1.00	1.00	1.00	1.00	1.00	1.00	1.00	1.00	1.00	1.00	1.00
Work Zone On Approach		No			No			No			No	
Adj Sat Flow, veh/h/ln	1673	1772	1772	1673	1772	1772	1673	1772	1772	1673	1772	1772
Adj Flow Rate, veh/h	59	1456	285	94	1174	56	169	31	85	57	51	52
Peak Hour Factor	0.96	0.96	0.96	0.96	0.96	0.96	0.96	0.96	0.96	0.96	0.96	0.96
Percent Heavy Veh, %	2	2	2	2	2	2	2	2	2	2	2	2
Cap, veh/h	59	1622	723	94	1648	79	264	82	226	250	158	161
Arrive On Green	0.04	0.48	0.48	0.06	0.50	0.50	0.20	0.20	0.20	0.20	0.20	0.20
Sat Flow, veh/h	1594	3367	1502	1594	3271	156	1220	418	1147	1205	804	820
Grp Volume(v), veh/h	59	1456	285	94	604	626	169	0	116	57	0	103
Grp Sat Flow(s),veh/h/ln	1594	1683	1502	1594	1683	1744	1220	0	1565	1205	0	1624
Q Serve(g_s), s	3.0	31.6	9.7	4.7	22.2	22.2	11.0	0.0	5.1	3.4	0.0	4.4
Cycle Q Clear(g_c), s	3.0	31.6	9.7	4.7	22.2	22.2	15.4	0.0	5.1	8.6	0.0	4.4
Prop In Lane	1.00		1.00	1.00		0.09	1.00		0.73	1.00		0.50
Lane Grp Cap(c), veh/h	59	1622	723	94	848	878	264	0	308	250	0	320
V/C Ratio(X)	1.00	0.90	0.39	1.00	0.71	0.71	0.64	0.00	0.38	0.23	0.00	0.32
Avail Cap(c_a), veh/h	120	1622	723	120	848	878	344	0	411	329	0	426
HCM Platoon Ratio	1.00	1.00	1.00	1.00	1.00	1.00	1.00	1.00	1.00	1.00	1.00	1.00
Upstream Filter(I)	1.00	1.00	1.00	1.00	1.00	1.00	1.00	0.00	1.00	1.00	0.00	1.00
Uniform Delay (d), s/veh	38.5	18.9	13.3	37.6	15.4	15.4	34.2	0.0	27.9	31.6	0.0	27.6
Incr Delay (d2), s/veh	32.8	8.3	1.6	72.1	5.1	4.9	1.0	0.0	0.3	0.2	0.0	0.2
Initial Q Delay(d3),s/veh	0.0	0.0	0.0	0.0	0.0	0.0	0.0	0.0	0.0	0.0	0.0	0.0
%ile BackOfQ(95%),veh/ln	2.9	17.4	5.5	6.5	12.7	13.0	5.6	0.0	3.3	1.7	0.0	2.9
Unsig. Movement Delay, s/veh												
LnGrp Delay(d),s/veh	71.4	27.2	14.9	109.8	20.4	20.3	35.1	0.0	28.2	31.8	0.0	27.8
LnGrp LOS	E	C	B	F	C	C	D	A	C	C	A	C
Approach Vol, veh/h		1800			1324			285			160	
Approach Delay, s/veh		26.7			26.7			32.3			29.2	
Approach LOS		C			C			C			C	

Timer - Assigned Phs	1	2		4	5	6		8
Phs Duration (G+Y+Rc), s	10.7	46.5		22.7	9.0	48.3		22.7
Change Period (Y+Rc), s	4.0	6.0		5.0	4.0	6.0		5.0
Max Green Setting (Gmax), s	8.0	34.0		23.0	8.0	34.0		23.0
Max Q Clear Time (g_c+I1), s	6.7	33.6		10.6	5.0	24.2		17.4
Green Ext Time (p_c), s	0.0	0.3		0.3	0.0	4.9		0.3

Intersection Summary		
HCM 6th Ctrl Delay		27.2
HCM 6th LOS		C

Movement	EBL	EBT	EBR	WBL	WBT	WBR	NBL	NBT	NBR	SBL	SBT	SBR
Lane Configurations												
Traffic Volume (veh/h)	61	961	103	27	1007	86	198	82	46	100	64	81
Future Volume (veh/h)	61	961	103	27	1007	86	198	82	46	100	64	81
Initial Q (Qb), veh	0	0	0	0	0	0	0	0	0	0	0	0
Ped-Bike Adj(A_pbT)	1.00		1.00	1.00		1.00	1.00		1.00	1.00		1.00
Parking Bus, Adj	1.00	1.00	1.00	1.00	1.00	1.00	1.00	1.00	1.00	1.00	1.00	1.00
Work Zone On Approach		No			No			No			No	
Adj Sat Flow, veh/h/ln	1673	1772	1772	1673	1772	1772	1673	1772	1772	1673	1772	1772
Adj Flow Rate, veh/h	71	1117	120	31	1171	100	230	95	53	116	74	94
Peak Hour Factor	0.86	0.86	0.86	0.86	0.86	0.86	0.86	0.86	0.86	0.86	0.86	0.86
Percent Heavy Veh, %	2	2	2	2	2	2	2	2	2	2	2	2
Cap, veh/h	71	1515	676	40	1351	115	293	280	156	313	186	236
Arrive On Green	0.04	0.45	0.45	0.03	0.43	0.43	0.26	0.26	0.26	0.26	0.26	0.26
Sat Flow, veh/h	1594	3367	1502	1594	3139	268	1150	1069	596	1171	709	901
Grp Volume(v), veh/h	71	1117	120	31	627	644	230	0	148	116	0	168
Grp Sat Flow(s),veh/h/ln	1594	1683	1502	1594	1683	1724	1150	0	1665	1171	0	1610
Q Serve(g_s), s	3.6	21.8	3.8	1.5	27.1	27.2	14.1	0.0	5.8	7.1	0.0	6.9
Cycle Q Clear(g_c), s	3.6	21.8	3.8	1.5	27.1	27.2	21.0	0.0	5.8	12.9	0.0	6.9
Prop In Lane	1.00		1.00	1.00		0.16	1.00		0.36	1.00		0.56
Lane Grp Cap(c), veh/h	71	1515	676	40	725	742	293	0	437	313	0	423
V/C Ratio(X)	1.00	0.74	0.18	0.78	0.87	0.87	0.78	0.00	0.34	0.37	0.00	0.40
Avail Cap(c_a), veh/h	80	1515	676	80	725	742	293	0	437	313	0	423
HCM Platoon Ratio	1.00	1.00	1.00	1.00	1.00	1.00	1.00	1.00	1.00	1.00	1.00	1.00
Upstream Filter(I)	1.00	1.00	1.00	1.00	1.00	1.00	1.00	0.00	1.00	1.00	0.00	1.00
Uniform Delay (d), s/veh	38.2	18.1	13.2	38.8	20.7	20.7	33.8	0.0	23.9	29.1	0.0	24.3
Incr Delay (d2), s/veh	95.4	3.2	0.6	11.4	13.1	13.1	12.1	0.0	0.2	0.3	0.0	0.2
Initial Q Delay(d3),s/veh	0.0	0.0	0.0	0.0	0.0	0.0	0.0	0.0	0.0	0.0	0.0	0.0
%ile BackOfQ(95%),veh/ln	5.7	12.3	2.2	1.2	17.1	17.4	9.0	0.0	3.8	3.4	0.0	4.4
Unsig. Movement Delay, s/veh												
LnGrp Delay(d),s/veh	133.6	21.4	13.7	50.2	33.8	33.8	45.8	0.0	24.0	29.4	0.0	24.5
LnGrp LOS	F	C	B	D	C	C	D	A	C	C	A	C
Approach Vol, veh/h		1308			1302			378			284	
Approach Delay, s/veh		26.7			34.2			37.3			26.5	
Approach LOS		C			C			D			C	

Timer - Assigned Phs	1	2		4	5	6		8
Phs Duration (G+Y+Rc), s	8.0	44.0		28.0	9.6	42.4		28.0
Change Period (Y+Rc), s	4.0	6.0		5.0	4.0	6.0		5.0
Max Green Setting (Gmax), s	6.0	36.0		23.0	6.0	36.0		23.0
Max Q Clear Time (g_c+I1), s	3.5	23.8		14.9	5.6	29.2		23.0
Green Ext Time (p_c), s	0.0	5.9		0.5	0.0	4.0		0.0

Intersection Summary	
HCM 6th Ctrl Delay	30.9
HCM 6th LOS	C

Movement	EBL	EBT	EBR	WBL	WBT	WBR	NBL	NBT	NBR	SBL	SBT	SBR
Lane Configurations												
Traffic Volume (veh/h)	57	1426	274	90	1138	54	162	30	82	55	49	50
Future Volume (veh/h)	57	1426	274	90	1138	54	162	30	82	55	49	50
Initial Q (Qb), veh	0	0	0	0	0	0	0	0	0	0	0	0
Ped-Bike Adj(A_pbT)	1.00		1.00	1.00		1.00	1.00		1.00	1.00		1.00
Parking Bus, Adj	1.00	1.00	1.00	1.00	1.00	1.00	1.00	1.00	1.00	1.00	1.00	1.00
Work Zone On Approach		No			No			No			No	
Adj Sat Flow, veh/h/ln	1673	1772	1772	1673	1772	1772	1673	1772	1772	1673	1772	1772
Adj Flow Rate, veh/h	59	1485	285	94	1185	56	169	31	85	57	51	52
Peak Hour Factor	0.96	0.96	0.96	0.96	0.96	0.96	0.96	0.96	0.96	0.96	0.96	0.96
Percent Heavy Veh, %	2	2	2	2	2	2	2	2	2	2	2	2
Cap, veh/h	59	1622	723	94	1649	78	264	82	226	250	158	161
Arrive On Green	0.04	0.48	0.48	0.06	0.50	0.50	0.20	0.20	0.20	0.20	0.20	0.20
Sat Flow, veh/h	1594	3367	1502	1594	3273	155	1220	418	1147	1205	804	820
Grp Volume(v), veh/h	59	1485	285	94	609	632	169	0	116	57	0	103
Grp Sat Flow(s),veh/h/ln	1594	1683	1502	1594	1683	1744	1220	0	1565	1205	0	1624
Q Serve(g_s), s	3.0	32.7	9.7	4.7	22.5	22.6	11.0	0.0	5.1	3.4	0.0	4.4
Cycle Q Clear(g_c), s	3.0	32.7	9.7	4.7	22.5	22.6	15.4	0.0	5.1	8.6	0.0	4.4
Prop In Lane	1.00		1.00	1.00		0.09	1.00		0.73	1.00		0.50
Lane Grp Cap(c), veh/h	59	1622	723	94	848	879	264	0	308	250	0	320
V/C Ratio(X)	1.00	0.92	0.39	1.00	0.72	0.72	0.64	0.00	0.38	0.23	0.00	0.32
Avail Cap(c_a), veh/h	120	1622	723	120	848	879	344	0	411	329	0	426
HCM Platoon Ratio	1.00	1.00	1.00	1.00	1.00	1.00	1.00	1.00	1.00	1.00	1.00	1.00
Upstream Filter(I)	1.00	1.00	1.00	1.00	1.00	1.00	1.00	0.00	1.00	1.00	0.00	1.00
Uniform Delay (d), s/veh	38.5	19.2	13.3	37.6	15.4	15.4	34.2	0.0	27.9	31.6	0.0	27.6
Incr Delay (d2), s/veh	32.8	9.6	1.6	72.1	5.2	5.0	1.0	0.0	0.3	0.2	0.0	0.2
Initial Q Delay(d3),s/veh	0.0	0.0	0.0	0.0	0.0	0.0	0.0	0.0	0.0	0.0	0.0	0.0
%ile BackOfQ(95%),veh/ln	2.9	18.2	5.5	6.5	12.8	13.2	5.6	0.0	3.3	1.7	0.0	2.9
Unsig. Movement Delay, s/veh												
LnGrp Delay(d),s/veh	71.4	28.8	14.9	109.8	20.6	20.5	35.1	0.0	28.2	31.8	0.0	27.8
LnGrp LOS	E	C	B	F	C	C	D	A	C	C	A	C
Approach Vol, veh/h		1829			1335			285			160	
Approach Delay, s/veh		28.0			26.8			32.3			29.2	
Approach LOS		C			C			C			C	

Timer - Assigned Phs	1	2		4	5	6		8
Phs Duration (G+Y+Rc), s	10.7	46.5		22.7	9.0	48.3		22.7
Change Period (Y+Rc), s	4.0	6.0		5.0	4.0	6.0		5.0
Max Green Setting (Gmax), s	8.0	34.0		23.0	8.0	34.0		23.0
Max Q Clear Time (g_c+I1), s	6.7	34.7		10.6	5.0	24.6		17.4
Green Ext Time (p_c), s	0.0	0.0		0.3	0.0	4.9		0.3

Intersection Summary		
HCM 6th Ctrl Delay		28.0
HCM 6th LOS		C

Movement	EBL	EBT	EBR	WBL	WBT	WBR	NBL	NBT	NBR	SBL	SBT	SBR
Lane Configurations												
Traffic Volume (veh/h)	85	1057	134	35	1098	101	254	104	60	135	105	134
Future Volume (veh/h)	85	1057	134	35	1098	101	254	104	60	135	105	134
Initial Q (Qb), veh	0	0	0	0	0	0	0	0	0	0	0	0
Ped-Bike Adj(A_pbT)	1.00		1.00	1.00		1.00	1.00		1.00	1.00		1.00
Parking Bus, Adj	1.00	1.00	1.00	1.00	1.00	1.00	1.00	1.00	1.00	1.00	1.00	1.00
Work Zone On Approach		No			No			No			No	
Adj Sat Flow, veh/h/ln	1673	1772	1772	1673	1772	1772	1673	1772	1772	1673	1772	1772
Adj Flow Rate, veh/h	99	1229	156	41	1277	117	295	121	70	157	122	156
Peak Hour Factor	0.86	0.86	0.86	0.86	0.86	0.86	0.86	0.86	0.86	0.86	0.86	0.86
Percent Heavy Veh, %	2	2	2	2	2	2	2	2	2	2	2	2
Cap, veh/h	80	1513	675	41	1326	121	203	276	160	278	185	237
Arrive On Green	0.05	0.45	0.45	0.03	0.43	0.43	0.26	0.26	0.26	0.26	0.26	0.26
Sat Flow, veh/h	1594	3367	1502	1594	3119	285	1040	1053	609	1126	706	903
Grp Volume(v), veh/h	99	1229	156	41	687	707	295	0	191	157	0	278
Grp Sat Flow(s),veh/h/ln	1594	1683	1502	1594	1683	1721	1040	0	1662	1126	0	1609
Q Serve(g_s), s	4.0	25.3	5.1	2.1	31.8	32.0	8.7	0.0	7.7	10.8	0.0	12.3
Cycle Q Clear(g_c), s	4.0	25.3	5.1	2.1	31.8	32.0	21.0	0.0	7.7	18.5	0.0	12.3
Prop In Lane	1.00		1.00	1.00		0.17	1.00		0.37	1.00		0.56
Lane Grp Cap(c), veh/h	80	1513	675	41	715	731	203	0	436	278	0	422
V/C Ratio(X)	1.24	0.81	0.23	1.00	0.96	0.97	1.45	0.00	0.44	0.57	0.00	0.66
Avail Cap(c_a), veh/h	80	1513	675	80	715	731	203	0	436	278	0	422
HCM Platoon Ratio	1.00	1.00	1.00	1.00	1.00	1.00	1.00	1.00	1.00	1.00	1.00	1.00
Upstream Filter(I)	1.00	1.00	1.00	1.00	1.00	1.00	1.00	0.00	1.00	1.00	0.00	1.00
Uniform Delay (d), s/veh	38.0	19.1	13.5	39.0	22.4	22.4	37.6	0.0	24.6	32.3	0.0	26.3
Incr Delay (d2), s/veh	179.4	4.9	0.8	45.7	25.3	26.0	229.7	0.0	0.3	1.7	0.0	3.0
Initial Q Delay(d3),s/veh	0.0	0.0	0.0	0.0	0.0	0.0	0.0	0.0	0.0	0.0	0.0	0.0
%ile BackOfQ(95%),veh/ln	9.8	14.2	2.9	2.3	21.9	22.6	27.8	0.0	5.0	5.1	0.0	8.2
Unsig. Movement Delay, s/veh												
LnGrp Delay(d),s/veh	217.4	24.0	14.3	84.7	47.7	48.4	267.3	0.0	24.8	33.9	0.0	29.3
LnGrp LOS	F	C	B	F	D	D	F	A	C	C	A	C
Approach Vol, veh/h		1484			1435			486			435	
Approach Delay, s/veh		35.9			49.1			172.0			31.0	
Approach LOS		D			D			F			C	

Timer - Assigned Phs	1	2		4	5	6		8
Phs Duration (G+Y+Rc), s	8.1	43.9		28.0	10.0	42.0		28.0
Change Period (Y+Rc), s	4.0	6.0		5.0	4.0	6.0		5.0
Max Green Setting (Gmax), s	6.0	36.0		23.0	6.0	36.0		23.0
Max Q Clear Time (g_c+I1), s	4.1	27.3		20.5	6.0	34.0		23.0
Green Ext Time (p_c), s	0.0	5.1		0.4	0.0	1.4		0.0

Intersection Summary	
HCM 6th Ctrl Delay	57.5
HCM 6th LOS	E

Movement	EBL	EBT	EBR	WBL	WBT	WBR	NBL	NBT	NBR	SBL	SBT	SBR
Lane Configurations												
Traffic Volume (veh/h)	115	1558	344	111	1281	94	218	74	97	81	83	94
Future Volume (veh/h)	115	1558	344	111	1281	94	218	74	97	81	83	94
Initial Q (Qb), veh	0	0	0	0	0	0	0	0	0	0	0	0
Ped-Bike Adj(A_pbT)	1.00		1.00	1.00		1.00	1.00		1.00	1.00		1.00
Parking Bus, Adj	1.00	1.00	1.00	1.00	1.00	1.00	1.00	1.00	1.00	1.00	1.00	1.00
Work Zone On Approach		No			No			No			No	
Adj Sat Flow, veh/h/ln	1673	1772	1772	1673	1772	1772	1673	1772	1772	1673	1772	1772
Adj Flow Rate, veh/h	120	1623	358	116	1334	98	227	77	101	84	86	98
Peak Hour Factor	0.96	0.96	0.96	0.96	0.96	0.96	0.96	0.96	0.96	0.96	0.96	0.96
Percent Heavy Veh, %	2	2	2	2	2	2	2	2	2	2	2	2
Cap, veh/h	120	1354	604	116	1272	93	280	183	239	284	198	226
Arrive On Green	0.08	0.40	0.40	0.07	0.40	0.40	0.26	0.26	0.26	0.26	0.26	0.26
Sat Flow, veh/h	1594	3367	1502	1594	3180	233	1133	695	912	1139	756	861
Grp Volume(v), veh/h	120	1623	358	116	704	728	227	0	178	84	0	184
Grp Sat Flow(s),veh/h/ln	1594	1683	1502	1594	1683	1730	1133	0	1608	1139	0	1617
Q Serve(g_s), s	6.0	32.2	15.0	5.8	32.0	32.0	13.4	0.0	7.3	5.3	0.0	7.6
Cycle Q Clear(g_c), s	6.0	32.2	15.0	5.8	32.0	32.0	21.0	0.0	7.3	12.6	0.0	7.6
Prop In Lane	1.00		1.00	1.00		0.13	1.00		0.57	1.00		0.53
Lane Grp Cap(c), veh/h	120	1354	604	116	673	692	280	0	422	284	0	424
V/C Ratio(X)	1.00	1.20	0.59	1.00	1.05	1.05	0.81	0.00	0.42	0.30	0.00	0.43
Avail Cap(c_a), veh/h	120	1354	604	120	673	692	280	0	422	284	0	424
HCM Platoon Ratio	1.00	1.00	1.00	1.00	1.00	1.00	1.00	1.00	1.00	1.00	1.00	1.00
Upstream Filter(I)	1.00	1.00	1.00	1.00	1.00	1.00	1.00	0.00	1.00	1.00	0.00	1.00
Uniform Delay (d), s/veh	37.0	23.9	18.8	37.1	24.0	24.0	34.4	0.0	24.5	29.7	0.0	24.6
Incr Delay (d2), s/veh	83.4	96.8	4.2	81.2	47.3	48.6	15.2	0.0	0.2	0.2	0.0	0.3
Initial Q Delay(d3),s/veh	0.0	0.0	0.0	0.0	0.0	0.0	0.0	0.0	0.0	0.0	0.0	0.0
%ile BackOfQ(95%),veh/ln	8.6	42.5	8.9	8.3	27.7	28.7	9.2	0.0	4.7	2.5	0.0	4.8
Unsig. Movement Delay, s/veh												
LnGrp Delay(d),s/veh	120.4	120.7	23.0	118.3	71.3	72.6	49.6	0.0	24.7	29.9	0.0	24.8
LnGrp LOS	F	F	C	F	F	F	D	A	C	C	A	C
Approach Vol, veh/h		2101			1548			405			268	
Approach Delay, s/veh		104.0			75.4			38.6			26.4	
Approach LOS		F			E			D			C	

Timer - Assigned Phs	1	2		4	5	6		8
Phs Duration (G+Y+Rc), s	11.8	40.2		28.0	12.0	40.0		28.0
Change Period (Y+Rc), s	4.0	6.0		5.0	4.0	6.0		5.0
Max Green Setting (Gmax), s	8.0	34.0		23.0	8.0	34.0		23.0
Max Q Clear Time (g_c+I1), s	7.8	34.2		14.6	8.0	34.0		23.0
Green Ext Time (p_c), s	0.0	0.0		0.5	0.0	0.0		0.0

Intersection Summary		
HCM 6th Ctrl Delay		82.8
HCM 6th LOS		F

Movement	EBL	EBT	EBR	WBL	WBT	WBR	NBL	NBT	NBR	SBL	SBT	SBR
Lane Configurations												
Traffic Volume (veh/h)	85	1063	134	35	1119	101	254	104	60	135	105	134
Future Volume (veh/h)	85	1063	134	35	1119	101	254	104	60	135	105	134
Initial Q (Qb), veh	0	0	0	0	0	0	0	0	0	0	0	0
Ped-Bike Adj(A_pbT)	1.00		1.00	1.00		1.00	1.00		1.00	1.00		1.00
Parking Bus, Adj	1.00	1.00	1.00	1.00	1.00	1.00	1.00	1.00	1.00	1.00	1.00	1.00
Work Zone On Approach		No			No			No			No	
Adj Sat Flow, veh/h/ln	1673	1772	1772	1673	1772	1772	1673	1772	1772	1673	1772	1772
Adj Flow Rate, veh/h	99	1236	156	41	1301	117	295	121	70	157	122	156
Peak Hour Factor	0.86	0.86	0.86	0.86	0.86	0.86	0.86	0.86	0.86	0.86	0.86	0.86
Percent Heavy Veh, %	2	2	2	2	2	2	2	2	2	2	2	2
Cap, veh/h	80	1513	675	41	1328	119	203	276	160	278	185	237
Arrive On Green	0.05	0.45	0.45	0.03	0.42	0.42	0.26	0.26	0.26	0.26	0.26	0.26
Sat Flow, veh/h	1594	3367	1502	1594	3125	280	1040	1053	609	1126	706	903
Grp Volume(v), veh/h	99	1236	156	41	699	719	295	0	191	157	0	278
Grp Sat Flow(s),veh/h/ln	1594	1683	1502	1594	1683	1722	1040	0	1662	1126	0	1609
Q Serve(g_s), s	4.0	25.6	5.1	2.1	32.7	33.0	8.7	0.0	7.7	10.8	0.0	12.3
Cycle Q Clear(g_c), s	4.0	25.6	5.1	2.1	32.7	33.0	21.0	0.0	7.7	18.5	0.0	12.3
Prop In Lane	1.00		1.00	1.00		0.16	1.00		0.37	1.00		0.56
Lane Grp Cap(c), veh/h	80	1513	675	41	715	732	203	0	436	278	0	422
V/C Ratio(X)	1.24	0.82	0.23	1.00	0.98	0.98	1.45	0.00	0.44	0.57	0.00	0.66
Avail Cap(c_a), veh/h	80	1513	675	80	715	732	203	0	436	278	0	422
HCM Platoon Ratio	1.00	1.00	1.00	1.00	1.00	1.00	1.00	1.00	1.00	1.00	1.00	1.00
Upstream Filter(I)	1.00	1.00	1.00	1.00	1.00	1.00	1.00	0.00	1.00	1.00	0.00	1.00
Uniform Delay (d), s/veh	38.0	19.2	13.5	39.0	22.6	22.7	37.6	0.0	24.6	32.3	0.0	26.3
Incr Delay (d2), s/veh	179.4	5.0	0.8	45.7	28.5	29.3	229.7	0.0	0.3	1.7	0.0	3.0
Initial Q Delay(d3),s/veh	0.0	0.0	0.0	0.0	0.0	0.0	0.0	0.0	0.0	0.0	0.0	0.0
%ile BackOfQ(95%),veh/ln	9.8	14.3	2.9	2.3	23.1	23.9	27.8	0.0	5.0	5.1	0.0	8.2
Unsig. Movement Delay, s/veh												
LnGrp Delay(d),s/veh	217.4	24.2	14.3	84.7	51.1	52.1	267.3	0.0	24.8	33.9	0.0	29.3
LnGrp LOS	F	C	B	F	D	D	F	A	C	C	A	C
Approach Vol, veh/h		1491			1459			486			435	
Approach Delay, s/veh		36.0			52.5			172.0			31.0	
Approach LOS		D			D			F			C	

Timer - Assigned Phs	1	2		4	5	6		8
Phs Duration (G+Y+Rc), s	8.1	43.9		28.0	10.0	42.0		28.0
Change Period (Y+Rc), s	4.0	6.0		5.0	4.0	6.0		5.0
Max Green Setting (Gmax), s	6.0	36.0		23.0	6.0	36.0		23.0
Max Q Clear Time (g_c+I1), s	4.1	27.6		20.5	6.0	35.0		23.0
Green Ext Time (p_c), s	0.0	5.1		0.4	0.0	0.8		0.0

Intersection Summary	
HCM 6th Ctrl Delay	58.7
HCM 6th LOS	E

Movement	EBL	EBT	EBR	WBL	WBT	WBR	NBL	NBT	NBR	SBL	SBT	SBR
Lane Configurations												
Traffic Volume (veh/h)	115	1586	344	111	1292	94	218	74	97	81	83	94
Future Volume (veh/h)	115	1586	344	111	1292	94	218	74	97	81	83	94
Initial Q (Qb), veh	0	0	0	0	0	0	0	0	0	0	0	0
Ped-Bike Adj(A_pbT)	1.00		1.00	1.00		1.00	1.00		1.00	1.00		1.00
Parking Bus, Adj	1.00	1.00	1.00	1.00	1.00	1.00	1.00	1.00	1.00	1.00	1.00	1.00
Work Zone On Approach		No			No			No			No	
Adj Sat Flow, veh/h/ln	1673	1772	1772	1673	1772	1772	1673	1772	1772	1673	1772	1772
Adj Flow Rate, veh/h	120	1652	358	116	1346	98	227	77	101	84	86	98
Peak Hour Factor	0.96	0.96	0.96	0.96	0.96	0.96	0.96	0.96	0.96	0.96	0.96	0.96
Percent Heavy Veh, %	2	2	2	2	2	2	2	2	2	2	2	2
Cap, veh/h	120	1354	604	116	1273	92	280	183	239	284	198	226
Arrive On Green	0.08	0.40	0.40	0.07	0.40	0.40	0.26	0.26	0.26	0.26	0.26	0.26
Sat Flow, veh/h	1594	3367	1502	1594	3183	231	1133	695	912	1139	756	861
Grp Volume(v), veh/h	120	1652	358	116	710	734	227	0	178	84	0	184
Grp Sat Flow(s),veh/h/ln	1594	1683	1502	1594	1683	1730	1133	0	1608	1139	0	1617
Q Serve(g_s), s	6.0	32.2	15.0	5.8	32.0	32.0	13.4	0.0	7.3	5.3	0.0	7.6
Cycle Q Clear(g_c), s	6.0	32.2	15.0	5.8	32.0	32.0	21.0	0.0	7.3	12.6	0.0	7.6
Prop In Lane	1.00		1.00	1.00		0.13	1.00		0.57	1.00		0.53
Lane Grp Cap(c), veh/h	120	1354	604	116	673	692	280	0	422	284	0	424
V/C Ratio(X)	1.00	1.22	0.59	1.00	1.05	1.06	0.81	0.00	0.42	0.30	0.00	0.43
Avail Cap(c_a), veh/h	120	1354	604	120	673	692	280	0	422	284	0	424
HCM Platoon Ratio	1.00	1.00	1.00	1.00	1.00	1.00	1.00	1.00	1.00	1.00	1.00	1.00
Upstream Filter(I)	1.00	1.00	1.00	1.00	1.00	1.00	1.00	0.00	1.00	1.00	0.00	1.00
Uniform Delay (d), s/veh	37.0	23.9	18.8	37.1	24.0	24.0	34.4	0.0	24.5	29.7	0.0	24.6
Incr Delay (d2), s/veh	83.4	105.9	4.2	81.2	49.9	51.3	15.2	0.0	0.2	0.2	0.0	0.3
Initial Q Delay(d3),s/veh	0.0	0.0	0.0	0.0	0.0	0.0	0.0	0.0	0.0	0.0	0.0	0.0
%ile BackOfQ(95%),veh/ln	8.6	45.2	8.9	8.3	28.4	29.6	9.2	0.0	4.7	2.5	0.0	4.8
Unsig. Movement Delay, s/veh												
LnGrp Delay(d),s/veh	120.4	129.8	23.0	118.3	73.9	75.3	49.6	0.0	24.7	29.9	0.0	24.8
LnGrp LOS	F	F	C	F	F	F	D	A	C	C	A	C
Approach Vol, veh/h		2130			1560			405			268	
Approach Delay, s/veh		111.3			77.9			38.6			26.4	
Approach LOS		F			E			D			C	

Timer - Assigned Phs	1	2		4	5	6		8
Phs Duration (G+Y+Rc), s	11.8	40.2		28.0	12.0	40.0		28.0
Change Period (Y+Rc), s	4.0	6.0		5.0	4.0	6.0		5.0
Max Green Setting (Gmax), s	8.0	34.0		23.0	8.0	34.0		23.0
Max Q Clear Time (g_c+I1), s	7.8	34.2		14.6	8.0	34.0		23.0
Green Ext Time (p_c), s	0.0	0.0		0.5	0.0	0.0		0.0

Intersection Summary		
HCM 6th Ctrl Delay		87.4
HCM 6th LOS		F

Movement	EBL	EBT	EBR	WBL	WBT	WBR	NBL	NBT	NBR	SBL	SBT	SBR
Lane Configurations												
Traffic Volume (veh/h)	0	0	0	45	0	46	0	982	101	126	602	0
Future Volume (veh/h)	0	0	0	45	0	46	0	982	101	126	602	0
Initial Q (Qb), veh	0	0	0	0	0	0	0	0	0	0	0	0
Ped-Bike Adj(A_pbT)	1.00		1.00	1.00		1.00	1.00		1.00	1.00		1.00
Parking Bus, Adj	1.00	1.00	1.00	1.00	1.00	1.00	1.00	1.00	1.00	1.00	1.00	1.00
Work Zone On Approach		No			No			No			No	
Adj Sat Flow, veh/h/ln	1772	1772	1772	1673	1772	1772	0	1772	1772	1673	1772	0
Adj Flow Rate, veh/h	0	0	0	50	0	51	0	1091	112	140	669	0
Peak Hour Factor	0.90	0.90	0.90	0.90	0.90	0.90	0.90	0.90	0.90	0.90	0.90	0.90
Percent Heavy Veh, %	2	2	2	2	2	2	0	2	2	2	2	0
Cap, veh/h	0	55	0	139	0	46	0	2104	938	140	2674	0
Arrive On Green	0.00	0.00	0.00	0.03	0.00	0.03	0.00	0.62	0.62	0.09	0.79	0.00
Sat Flow, veh/h	0	1772	0	1594	0	1502	0	3455	1502	1594	3455	0
Grp Volume(v), veh/h	0	0	0	50	0	51	0	1091	112	140	669	0
Grp Sat Flow(s),veh/h/ln	0	1772	0	1594	0	1502	0	1683	1502	1594	1683	0
Q Serve(g_s), s	0.0	0.0	0.0	2.5	0.0	2.5	0.0	14.4	2.4	7.0	4.1	0.0
Cycle Q Clear(g_c), s	0.0	0.0	0.0	2.5	0.0	2.5	0.0	14.4	2.4	7.0	4.1	0.0
Prop In Lane	0.00		0.00	1.00		1.00	0.00		1.00	1.00		0.00
Lane Grp Cap(c), veh/h	0	55	0	139	0	46	0	2104	938	140	2674	0
V/C Ratio(X)	0.00	0.00	0.00	0.36	0.00	1.10	0.00	0.52	0.12	1.00	0.25	0.00
Avail Cap(c_a), veh/h	0	299	0	359	0	253	0	2104	938	269	2674	0
HCM Platoon Ratio	1.00	1.00	1.00	1.00	1.00	1.00	1.00	1.00	1.00	1.00	1.00	1.00
Upstream Filter(I)	0.00	0.00	0.00	1.00	0.00	1.00	0.00	1.00	1.00	0.77	0.77	0.00
Uniform Delay (d), s/veh	0.0	0.0	0.0	38.8	0.0	38.8	0.0	8.3	6.1	36.5	2.1	0.0
Incr Delay (d2), s/veh	0.0	0.0	0.0	0.6	0.0	67.7	0.0	0.9	0.3	22.3	0.2	0.0
Initial Q Delay(d3),s/veh	0.0	0.0	0.0	0.0	0.0	0.0	0.0	0.0	0.0	0.0	0.0	0.0
%ile BackOfQ(95%),veh/ln	0.0	0.0	0.0	1.8	0.0	3.2	0.0	8.2	1.3	6.2	1.4	0.0
Unsig. Movement Delay, s/veh												
LnGrp Delay(d),s/veh	0.0	0.0	0.0	39.4	0.0	106.5	0.0	9.2	6.3	58.8	2.3	0.0
LnGrp LOS	A	A	A	D	A	F	A	A	A	E	A	A
Approach Vol, veh/h		0			101			1203			809	
Approach Delay, s/veh		0.0			73.2			9.0			12.1	
Approach LOS					E			A			B	

Timer - Assigned Phs	1	2		4		6		8				
Phs Duration (G+Y+Rc), s	13.5	57.5		9.0		71.0		9.0				
Change Period (Y+Rc), s	4.5	5.5		4.5		5.5		4.5				
Max Green Setting (Gmax), s	15.5	34.5		15.5		54.5		15.5				
Max Q Clear Time (g_c+I1), s	9.0	16.4		0.0		6.1		4.5				
Green Ext Time (p_c), s	0.0	1.7		0.0		1.0		0.0				

Intersection Summary												
HCM 6th Ctrl Delay			13.2									
HCM 6th LOS			B									

Movement	EBL	EBT	EBR	WBL	WBT	WBR	NBL	NBT	NBR	SBL	SBT	SBR
Lane Configurations												
Traffic Volume (veh/h)	0	0	0	171	0	101	0	605	140	297	764	0
Future Volume (veh/h)	0	0	0	171	0	101	0	605	140	297	764	0
Initial Q (Qb), veh	0	0	0	0	0	0	0	0	0	0	0	0
Ped-Bike Adj(A_pbT)	1.00		1.00	1.00		1.00	1.00		1.00	1.00		1.00
Parking Bus, Adj	1.00	1.00	1.00	1.00	1.00	1.00	1.00	1.00	1.00	1.00	1.00	1.00
Work Zone On Approach		No			No			No			No	
Adj Sat Flow, veh/h/ln	1772	1772	1772	1673	1772	1772	0	1772	1772	1673	1772	0
Adj Flow Rate, veh/h	0	0	0	180	0	106	0	637	147	313	804	0
Peak Hour Factor	0.95	0.95	0.95	0.95	0.95	0.95	0.95	0.95	0.95	0.95	0.95	0.95
Percent Heavy Veh, %	2	2	2	2	2	2	0	2	2	2	2	0
Cap, veh/h	0	201	0	271	0	170	0	1555	693	269	2396	0
Arrive On Green	0.00	0.00	0.00	0.11	0.00	0.11	0.00	0.46	0.46	0.17	0.71	0.00
Sat Flow, veh/h	0	1772	0	1594	0	1502	0	3455	1502	1594	3455	0
Grp Volume(v), veh/h	0	0	0	180	0	106	0	637	147	313	804	0
Grp Sat Flow(s),veh/h/ln	0	1772	0	1594	0	1502	0	1683	1502	1594	1683	0
Q Serve(g_s), s	0.0	0.0	0.0	9.0	0.0	5.4	0.0	10.0	4.7	13.5	7.2	0.0
Cycle Q Clear(g_c), s	0.0	0.0	0.0	9.0	0.0	5.4	0.0	10.0	4.7	13.5	7.2	0.0
Prop In Lane	0.00		0.00	1.00		1.00	0.00		1.00	1.00		0.00
Lane Grp Cap(c), veh/h	0	201	0	271	0	170	0	1555	693	269	2396	0
V/C Ratio(X)	0.00	0.00	0.00	0.67	0.00	0.62	0.00	0.41	0.21	1.16	0.34	0.00
Avail Cap(c_a), veh/h	0	299	0	359	0	253	0	1555	693	269	2396	0
HCM Platoon Ratio	1.00	1.00	1.00	1.00	1.00	1.00	1.00	1.00	1.00	1.00	1.00	1.00
Upstream Filter(I)	0.00	0.00	0.00	1.00	0.00	1.00	0.00	1.00	1.00	0.68	0.68	0.00
Uniform Delay (d), s/veh	0.0	0.0	0.0	35.5	0.0	33.8	0.0	14.3	12.8	33.3	4.4	0.0
Incr Delay (d2), s/veh	0.0	0.0	0.0	1.1	0.0	1.4	0.0	0.8	0.7	98.0	0.3	0.0
Initial Q Delay(d3),s/veh	0.0	0.0	0.0	0.0	0.0	0.0	0.0	0.0	0.0	0.0	0.0	0.0
%ile BackOfQ(95%),veh/ln	0.0	0.0	0.0	6.3	0.0	3.6	0.0	6.7	2.9	18.4	3.5	0.0
Unsig. Movement Delay, s/veh												
LnGrp Delay(d),s/veh	0.0	0.0	0.0	36.5	0.0	35.2	0.0	15.1	13.5	131.3	4.6	0.0
LnGrp LOS	A	A	A	D	A	D	A	B	B	F	A	A
Approach Vol, veh/h		0			286			784			1117	
Approach Delay, s/veh		0.0			36.1			14.8			40.1	
Approach LOS					D			B			D	

Timer - Assigned Phs	1	2		4		6		8				
Phs Duration (G+Y+Rc), s	20.0	44.4		15.6		64.4		15.6				
Change Period (Y+Rc), s	4.5	5.5		4.5		5.5		4.5				
Max Green Setting (Gmax), s	15.5	34.5		15.5		54.5		15.5				
Max Q Clear Time (g_c+I1), s	15.5	12.0		0.0		9.2		11.0				
Green Ext Time (p_c), s	0.0	0.9		0.0		1.2		0.0				

Intersection Summary			
HCM 6th Ctrl Delay			30.5
HCM 6th LOS			C

Movement	EBL	EBT	EBR	WBL	WBT	WBR	NBL	NBT	NBR	SBL	SBT	SBR
Lane Configurations												
Traffic Volume (veh/h)	22	0	0	45	0	46	5	986	101	126	648	52
Future Volume (veh/h)	22	0	0	45	0	46	5	986	101	126	648	52
Initial Q (Qb), veh	0	0	0	0	0	0	0	0	0	0	0	0
Ped-Bike Adj(A_pbT)	1.00		1.00	1.00		1.00	1.00		1.00	1.00		1.00
Parking Bus, Adj	1.00	1.00	1.00	1.00	1.00	1.00	1.00	1.00	1.00	1.00	1.00	1.00
Work Zone On Approach		No			No			No			No	
Adj Sat Flow, veh/h/ln	1772	1772	1772	1673	1772	1772	1772	1772	1772	1673	1772	1772
Adj Flow Rate, veh/h	24	0	0	50	0	51	6	1096	112	140	720	58
Peak Hour Factor	0.90	0.90	0.90	0.90	0.90	0.90	0.90	0.90	0.90	0.90	0.90	0.90
Percent Heavy Veh, %	2	2	2	2	2	2	2	2	2	2	2	2
Cap, veh/h	90	60	0	135	0	50	63	2094	934	140	2122	171
Arrive On Green	0.03	0.00	0.00	0.03	0.00	0.03	0.04	0.62	0.62	0.09	0.67	0.67
Sat Flow, veh/h	1354	1772	0	1339	0	1502	1688	3367	1502	1594	3155	254
Grp Volume(v), veh/h	24	0	0	50	0	51	6	1096	112	140	384	394
Grp Sat Flow(s),veh/h/ln	1354	1772	0	1339	0	1502	1688	1683	1502	1594	1683	1726
Q Serve(g_s), s	0.0	0.0	0.0	2.7	0.0	2.7	0.3	14.6	2.4	7.0	7.7	7.7
Cycle Q Clear(g_c), s	2.7	0.0	0.0	2.7	0.0	2.7	0.3	14.6	2.4	7.0	7.7	7.7
Prop In Lane	1.00		0.00	1.00		1.00	1.00		1.00	1.00		0.15
Lane Grp Cap(c), veh/h	90	60	0	135	0	50	63	2094	934	140	1132	1161
V/C Ratio(X)	0.27	0.00	0.00	0.37	0.00	1.01	0.09	0.52	0.12	1.00	0.34	0.34
Avail Cap(c_a), veh/h	273	299	0	316	0	253	285	2094	934	269	1132	1161
HCM Platoon Ratio	1.00	1.00	1.00	1.00	1.00	1.00	1.00	1.00	1.00	1.00	1.00	1.00
Upstream Filter(I)	1.00	0.00	0.00	1.00	0.00	1.00	1.00	1.00	1.00	0.75	0.75	0.75
Uniform Delay (d), s/veh	40.0	0.0	0.0	38.8	0.0	38.7	37.2	8.5	6.2	36.5	5.6	5.6
Incr Delay (d2), s/veh	0.6	0.0	0.0	0.6	0.0	38.4	0.6	0.9	0.3	22.0	0.6	0.6
Initial Q Delay(d3),s/veh	0.0	0.0	0.0	0.0	0.0	0.0	0.0	0.0	0.0	0.0	0.0	0.0
%ile BackOfQ(95%),veh/ln	0.9	0.0	0.0	1.8	0.0	2.7	0.2	8.3	1.3	6.2	4.3	4.4
Unsig. Movement Delay, s/veh												
LnGrp Delay(d),s/veh	40.6	0.0	0.0	39.4	0.0	77.1	37.8	9.4	6.4	58.5	6.2	6.2
LnGrp LOS	D	A	A	D	A	F	D	A	A	E	A	A
Approach Vol, veh/h		24			101			1214			918	
Approach Delay, s/veh		40.6			58.4			9.3			14.1	
Approach LOS		D			E			A			B	

Timer - Assigned Phs	1	2		4	5	6		8				
Phs Duration (G+Y+Rc), s	13.5	57.3		9.2	9.5	61.3		9.2				
Change Period (Y+Rc), s	4.5	5.5		4.5	4.5	5.5		4.5				
Max Green Setting (Gmax), s	15.5	34.5		15.5	15.5	34.5		15.5				
Max Q Clear Time (g_c+I1), s	9.0	16.6		4.7	2.3	9.7		4.7				
Green Ext Time (p_c), s	0.0	1.7		0.0	0.0	0.8		0.0				

Intersection Summary			
HCM 6th Ctrl Delay			13.8
HCM 6th LOS			B

Movement	EBL	EBT	EBR	WBL	WBT	WBR	NBL	NBT	NBR	SBL	SBT	SBR
Lane Configurations												
Traffic Volume (veh/h)	113	0	0	171	0	101	3	626	140	297	789	28
Future Volume (veh/h)	113	0	0	171	0	101	3	626	140	297	789	28
Initial Q (Qb), veh	0	0	0	0	0	0	0	0	0	0	0	0
Ped-Bike Adj(A_pbT)	1.00		1.00	1.00		1.00	1.00		1.00	1.00		1.00
Parking Bus, Adj	1.00	1.00	1.00	1.00	1.00	1.00	1.00	1.00	1.00	1.00	1.00	1.00
Work Zone On Approach		No			No			No			No	
Adj Sat Flow, veh/h/ln	1772	1772	1772	1673	1772	1772	1772	1772	1772	1673	1772	1772
Adj Flow Rate, veh/h	119	0	0	180	0	106	3	659	147	313	831	29
Peak Hour Factor	0.95	0.95	0.95	0.95	0.95	0.95	0.95	0.95	0.95	0.95	0.95	0.95
Percent Heavy Veh, %	2	2	2	2	2	2	2	2	2	2	2	2
Cap, veh/h	207	274	0	297	0	232	63	1415	631	269	1830	64
Arrive On Green	0.15	0.00	0.00	0.15	0.00	0.15	0.04	0.42	0.42	0.17	0.55	0.55
Sat Flow, veh/h	1288	1772	0	1339	0	1502	1688	3367	1502	1594	3319	116
Grp Volume(v), veh/h	119	0	0	180	0	106	3	659	147	313	421	439
Grp Sat Flow(s),veh/h/ln	1288	1772	0	1339	0	1502	1688	1683	1502	1594	1683	1751
Q Serve(g_s), s	7.2	0.0	0.0	10.5	0.0	5.1	0.1	11.3	5.0	13.5	12.0	12.0
Cycle Q Clear(g_c), s	12.4	0.0	0.0	10.5	0.0	5.1	0.1	11.3	5.0	13.5	12.0	12.0
Prop In Lane	1.00		0.00	1.00		1.00	1.00		1.00	1.00		0.07
Lane Grp Cap(c), veh/h	207	274	0	297	0	232	63	1415	631	269	928	966
V/C Ratio(X)	0.58	0.00	0.00	0.61	0.00	0.46	0.05	0.47	0.23	1.16	0.45	0.45
Avail Cap(c_a), veh/h	225	299	0	316	0	253	285	1415	631	269	928	966
HCM Platoon Ratio	1.00	1.00	1.00	1.00	1.00	1.00	1.00	1.00	1.00	1.00	1.00	1.00
Upstream Filter(I)	1.00	0.00	0.00	1.00	0.00	1.00	1.00	1.00	1.00	0.66	0.66	0.66
Uniform Delay (d), s/veh	36.5	0.0	0.0	33.0	0.0	30.7	37.1	16.7	14.9	33.3	10.7	10.7
Incr Delay (d2), s/veh	1.6	0.0	0.0	1.9	0.0	0.5	0.3	1.1	0.9	97.4	1.1	1.0
Initial Q Delay(d3),s/veh	0.0	0.0	0.0	0.0	0.0	0.0	0.0	0.0	0.0	0.0	0.0	0.0
%ile BackOfQ(95%),veh/ln	4.3	0.0	0.0	6.2	0.0	3.3	0.1	7.7	3.2	18.3	7.0	7.2
Unsig. Movement Delay, s/veh												
LnGrp Delay(d),s/veh	38.0	0.0	0.0	34.9	0.0	31.3	37.4	17.8	15.8	130.7	11.8	11.8
LnGrp LOS	D	A	A	C	A	C	D	B	B	F	B	B
Approach Vol, veh/h		119			286			809			1173	
Approach Delay, s/veh		38.0			33.6			17.5			43.5	
Approach LOS		D			C			B			D	

Timer - Assigned Phs	1	2		4	5	6		8
Phs Duration (G+Y+Rc), s	20.0	41.1		18.9	9.5	51.6		18.9
Change Period (Y+Rc), s	4.5	5.5		4.5	4.5	5.5		4.5
Max Green Setting (Gmax), s	15.5	34.5		15.5	15.5	34.5		15.5
Max Q Clear Time (g_c+I1), s	15.5	13.3		14.4	2.1	14.0		12.5
Green Ext Time (p_c), s	0.0	0.9		0.0	0.0	0.9		0.0

Intersection Summary	
HCM 6th Ctrl Delay	33.2
HCM 6th LOS	C

Movement	EBL	EBT	EBR	WBL	WBT	WBR	NBL	NBT	NBR	SBL	SBT	SBR
Lane Configurations												
Traffic Volume (veh/h)	0	0	0	49	0	54	0	1104	107	137	673	0
Future Volume (veh/h)	0	0	0	49	0	54	0	1104	107	137	673	0
Initial Q (Qb), veh	0	0	0	0	0	0	0	0	0	0	0	0
Ped-Bike Adj(A_pbT)	1.00		1.00	1.00		1.00	1.00		1.00	1.00		1.00
Parking Bus, Adj	1.00	1.00	1.00	1.00	1.00	1.00	1.00	1.00	1.00	1.00	1.00	1.00
Work Zone On Approach		No			No			No			No	
Adj Sat Flow, veh/h/ln	1772	1772	1772	1673	1772	1772	0	1772	1772	1673	1772	0
Adj Flow Rate, veh/h	0	0	0	54	0	60	0	1227	119	152	748	0
Peak Hour Factor	0.90	0.90	0.90	0.90	0.90	0.90	0.90	0.90	0.90	0.90	0.90	0.90
Percent Heavy Veh, %	2	2	2	2	2	2	0	2	2	2	2	0
Cap, veh/h	0	58	0	142	0	49	0	2073	924	152	2668	0
Arrive On Green	0.00	0.00	0.00	0.03	0.00	0.03	0.00	0.62	0.62	0.10	0.79	0.00
Sat Flow, veh/h	0	1772	0	1594	0	1502	0	3455	1502	1594	3455	0
Grp Volume(v), veh/h	0	0	0	54	0	60	0	1227	119	152	748	0
Grp Sat Flow(s),veh/h/ln	0	1772	0	1594	0	1502	0	1683	1502	1594	1683	0
Q Serve(g_s), s	0.0	0.0	0.0	2.6	0.0	2.6	0.0	17.6	2.6	7.6	4.7	0.0
Cycle Q Clear(g_c), s	0.0	0.0	0.0	2.6	0.0	2.6	0.0	17.6	2.6	7.6	4.7	0.0
Prop In Lane	0.00		0.00	1.00		1.00	0.00		1.00	1.00		0.00
Lane Grp Cap(c), veh/h	0	58	0	142	0	49	0	2073	924	152	2668	0
V/C Ratio(X)	0.00	0.00	0.00	0.38	0.00	1.23	0.00	0.59	0.13	1.00	0.28	0.00
Avail Cap(c_a), veh/h	0	299	0	359	0	253	0	2073	924	269	2668	0
HCM Platoon Ratio	1.00	1.00	1.00	1.00	1.00	1.00	1.00	1.00	1.00	1.00	1.00	1.00
Upstream Filter(I)	0.00	0.00	0.00	1.00	0.00	1.00	0.00	1.00	1.00	0.76	0.76	0.00
Uniform Delay (d), s/veh	0.0	0.0	0.0	38.8	0.0	38.7	0.0	9.3	6.4	36.2	2.2	0.0
Incr Delay (d2), s/veh	0.0	0.0	0.0	0.6	0.0	116.6	0.0	1.3	0.3	27.9	0.2	0.0
Initial Q Delay(d3),s/veh	0.0	0.0	0.0	0.0	0.0	0.0	0.0	0.0	0.0	0.0	0.0	0.0
%ile BackOfQ(95%),veh/ln	0.0	0.0	0.0	1.9	0.0	4.5	0.0	9.8	1.4	7.0	1.6	0.0
Unsig. Movement Delay, s/veh												
LnGrp Delay(d),s/veh	0.0	0.0	0.0	39.4	0.0	155.3	0.0	10.6	6.7	64.1	2.4	0.0
LnGrp LOS	A	A	A	D	A	F	A	B	A	E	A	A
Approach Vol, veh/h		0			114			1346			900	
Approach Delay, s/veh		0.0			100.4			10.2			12.8	
Approach LOS					F			B			B	

Timer - Assigned Phs	1	2		4		6		8
Phs Duration (G+Y+Rc), s	14.1	56.8		9.1		70.9		9.1
Change Period (Y+Rc), s	4.5	5.5		4.5		5.5		4.5
Max Green Setting (Gmax), s	15.5	34.5		15.5		54.5		15.5
Max Q Clear Time (g_c+I1), s	9.6	19.6		0.0		6.7		4.6
Green Ext Time (p_c), s	0.0	1.9		0.0		1.1		0.0

Intersection Summary		
HCM 6th Ctrl Delay		15.6
HCM 6th LOS		B

Movement	EBL	EBT	EBR	WBL	WBT	WBR	NBL	NBT	NBR	SBL	SBT	SBR
Lane Configurations												
Traffic Volume (veh/h)	0	0	0	182	0	123	0	711	150	326	897	0
Future Volume (veh/h)	0	0	0	182	0	123	0	711	150	326	897	0
Initial Q (Qb), veh	0	0	0	0	0	0	0	0	0	0	0	0
Ped-Bike Adj(A_pbT)	1.00		1.00	1.00		1.00	1.00		1.00	1.00		1.00
Parking Bus, Adj	1.00	1.00	1.00	1.00	1.00	1.00	1.00	1.00	1.00	1.00	1.00	1.00
Work Zone On Approach		No			No			No			No	
Adj Sat Flow, veh/h/ln	1772	1772	1772	1673	1772	1772	0	1772	1772	1673	1772	0
Adj Flow Rate, veh/h	0	0	0	192	0	129	0	748	158	343	944	0
Peak Hour Factor	0.95	0.95	0.95	0.95	0.95	0.95	0.95	0.95	0.95	0.95	0.95	0.95
Percent Heavy Veh, %	2	2	2	2	2	2	0	2	2	2	2	0
Cap, veh/h	0	214	0	283	0	182	0	1528	682	269	2370	0
Arrive On Green	0.00	0.00	0.00	0.12	0.00	0.12	0.00	0.45	0.45	0.17	0.70	0.00
Sat Flow, veh/h	0	1772	0	1594	0	1502	0	3455	1502	1594	3455	0
Grp Volume(v), veh/h	0	0	0	192	0	129	0	748	158	343	944	0
Grp Sat Flow(s),veh/h/ln	0	1772	0	1594	0	1502	0	1683	1502	1594	1683	0
Q Serve(g_s), s	0.0	0.0	0.0	9.6	0.0	6.6	0.0	12.5	5.1	13.5	9.2	0.0
Cycle Q Clear(g_c), s	0.0	0.0	0.0	9.6	0.0	6.6	0.0	12.5	5.1	13.5	9.2	0.0
Prop In Lane	0.00		0.00	1.00		1.00	0.00		1.00	1.00		0.00
Lane Grp Cap(c), veh/h	0	214	0	283	0	182	0	1528	682	269	2370	0
V/C Ratio(X)	0.00	0.00	0.00	0.68	0.00	0.71	0.00	0.49	0.23	1.28	0.40	0.00
Avail Cap(c_a), veh/h	0	299	0	359	0	253	0	1528	682	269	2370	0
HCM Platoon Ratio	1.00	1.00	1.00	1.00	1.00	1.00	1.00	1.00	1.00	1.00	1.00	1.00
Upstream Filter(I)	0.00	0.00	0.00	1.00	0.00	1.00	0.00	1.00	1.00	0.61	0.61	0.00
Uniform Delay (d), s/veh	0.0	0.0	0.0	35.1	0.0	33.8	0.0	15.3	13.3	33.3	4.9	0.0
Incr Delay (d2), s/veh	0.0	0.0	0.0	1.9	0.0	2.3	0.0	1.1	0.8	140.6	0.3	0.0
Initial Q Delay(d3),s/veh	0.0	0.0	0.0	0.0	0.0	0.0	0.0	0.0	0.0	0.0	0.0	0.0
%ile BackOfQ(95%),veh/ln	0.0	0.0	0.0	6.8	0.0	4.4	0.0	8.2	3.2	23.1	4.5	0.0
Unsig. Movement Delay, s/veh												
LnGrp Delay(d),s/veh	0.0	0.0	0.0	37.1	0.0	36.1	0.0	16.5	14.1	173.8	5.2	0.0
LnGrp LOS	A	A	A	D	A	D	A	B	B	F	A	A
Approach Vol, veh/h		0			321			906			1287	
Approach Delay, s/veh		0.0			36.7			16.0			50.1	
Approach LOS					D			B			D	

Timer - Assigned Phs	1	2		4		6		8				
Phs Duration (G+Y+Rc), s	20.0	43.8		16.2		63.8		16.2				
Change Period (Y+Rc), s	4.5	5.5		4.5		5.5		4.5				
Max Green Setting (Gmax), s	15.5	34.5		15.5		54.5		15.5				
Max Q Clear Time (g_c+I1), s	15.5	14.5		0.0		11.2		11.6				
Green Ext Time (p_c), s	0.0	1.0		0.0		1.5		0.1				

Intersection Summary		
HCM 6th Ctrl Delay		36.1
HCM 6th LOS		D

Movement	EBL	EBT	EBR	WBL	WBT	WBR	NBL	NBT	NBR	SBL	SBT	SBR
Lane Configurations												
Traffic Volume (veh/h)	22	0	0	49	0	54	5	1108	107	137	719	52
Future Volume (veh/h)	22	0	0	49	0	54	5	1108	107	137	719	52
Initial Q (Qb), veh	0	0	0	0	0	0	0	0	0	0	0	0
Ped-Bike Adj(A_pbT)	1.00		1.00	1.00		1.00	1.00		1.00	1.00		1.00
Parking Bus, Adj	1.00	1.00	1.00	1.00	1.00	1.00	1.00	1.00	1.00	1.00	1.00	1.00
Work Zone On Approach		No			No			No			No	
Adj Sat Flow, veh/h/ln	1772	1772	1772	1673	1772	1772	1772	1772	1772	1673	1772	1772
Adj Flow Rate, veh/h	24	0	0	54	0	60	6	1231	119	152	799	58
Peak Hour Factor	0.90	0.90	0.90	0.90	0.90	0.90	0.90	0.90	0.90	0.90	0.90	0.90
Percent Heavy Veh, %	2	2	2	2	2	2	2	2	2	2	2	2
Cap, veh/h	90	61	0	136	0	52	63	2066	921	152	2138	155
Arrive On Green	0.03	0.00	0.00	0.03	0.00	0.03	0.04	0.61	0.61	0.10	0.67	0.67
Sat Flow, veh/h	1343	1772	0	1339	0	1502	1688	3367	1502	1594	3183	231
Grp Volume(v), veh/h	24	0	0	54	0	60	6	1231	119	152	423	434
Grp Sat Flow(s),veh/h/ln	1343	1772	0	1339	0	1502	1688	1683	1502	1594	1683	1730
Q Serve(g_s), s	0.0	0.0	0.0	2.8	0.0	2.8	0.3	17.8	2.7	7.6	8.8	8.8
Cycle Q Clear(g_c), s	2.8	0.0	0.0	2.8	0.0	2.8	0.3	17.8	2.7	7.6	8.8	8.8
Prop In Lane	1.00		0.00	1.00		1.00	1.00		1.00	1.00		0.13
Lane Grp Cap(c), veh/h	90	61	0	136	0	52	63	2066	921	152	1131	1162
V/C Ratio(X)	0.27	0.00	0.00	0.40	0.00	1.16	0.09	0.60	0.13	1.00	0.37	0.37
Avail Cap(c_a), veh/h	270	299	0	316	0	253	285	2066	921	269	1131	1162
HCM Platoon Ratio	1.00	1.00	1.00	1.00	1.00	1.00	1.00	1.00	1.00	1.00	1.00	1.00
Upstream Filter(I)	1.00	0.00	0.00	1.00	0.00	1.00	1.00	1.00	1.00	0.74	0.74	0.74
Uniform Delay (d), s/veh	40.0	0.0	0.0	38.8	0.0	38.6	37.2	9.4	6.5	36.2	5.8	5.8
Incr Delay (d2), s/veh	0.6	0.0	0.0	0.7	0.0	86.5	0.6	1.3	0.3	27.5	0.7	0.7
Initial Q Delay(d3),s/veh	0.0	0.0	0.0	0.0	0.0	0.0	0.0	0.0	0.0	0.0	0.0	0.0
%ile BackOfQ(95%),veh/ln	0.9	0.0	0.0	1.9	0.0	4.0	0.2	9.9	1.5	6.9	4.9	5.0
Unsig. Movement Delay, s/veh												
LnGrp Delay(d),s/veh	40.6	0.0	0.0	39.5	0.0	125.1	37.8	10.7	6.8	63.7	6.5	6.4
LnGrp LOS	D	A	A	D	A	F	D	B	A	E	A	A
Approach Vol, veh/h		24			114			1356			1009	
Approach Delay, s/veh		40.6			84.6			10.5			15.1	
Approach LOS		D			F			B			B	

Timer - Assigned Phs	1	2		4	5	6		8				
Phs Duration (G+Y+Rc), s	14.1	56.6		9.3	9.5	61.2		9.3				
Change Period (Y+Rc), s	4.5	5.5		4.5	4.5	5.5		4.5				
Max Green Setting (Gmax), s	15.5	34.5		15.5	15.5	34.5		15.5				
Max Q Clear Time (g_c+I1), s	9.6	19.8		4.8	2.3	10.8		4.8				
Green Ext Time (p_c), s	0.0	1.9		0.0	0.0	0.9		0.0				

Intersection Summary			
HCM 6th Ctrl Delay			16.0
HCM 6th LOS			B

Movement	EBL	EBT	EBR	WBL	WBT	WBR	NBL	NBT	NBR	SBL	SBT	SBR
Lane Configurations												
Traffic Volume (veh/h)	113	0	0	182	0	123	3	732	150	326	922	28
Future Volume (veh/h)	113	0	0	182	0	123	3	732	150	326	922	28
Initial Q (Qb), veh	0	0	0	0	0	0	0	0	0	0	0	0
Ped-Bike Adj(A_pbT)	1.00		1.00	1.00		1.00	1.00		1.00	1.00		1.00
Parking Bus, Adj	1.00	1.00	1.00	1.00	1.00	1.00	1.00	1.00	1.00	1.00	1.00	1.00
Work Zone On Approach		No			No			No			No	
Adj Sat Flow, veh/h/ln	1772	1772	1772	1673	1772	1772	1772	1772	1772	1673	1772	1772
Adj Flow Rate, veh/h	119	0	0	192	0	129	3	771	158	343	971	29
Peak Hour Factor	0.95	0.95	0.95	0.95	0.95	0.95	0.95	0.95	0.95	0.95	0.95	0.95
Percent Heavy Veh, %	2	2	2	2	2	2	2	2	2	2	2	2
Cap, veh/h	204	299	0	316	0	253	63	1368	610	269	1795	54
Arrive On Green	0.17	0.00	0.00	0.17	0.00	0.17	0.04	0.41	0.41	0.17	0.54	0.54
Sat Flow, veh/h	1261	1772	0	1339	0	1502	1688	3367	1502	1594	3338	100
Grp Volume(v), veh/h	119	0	0	192	0	129	3	771	158	343	490	510
Grp Sat Flow(s),veh/h/ln	1261	1772	0	1339	0	1502	1688	1683	1502	1594	1683	1754
Q Serve(g_s), s	7.2	0.0	0.0	11.1	0.0	6.3	0.1	14.1	5.6	13.5	15.2	15.2
Cycle Q Clear(g_c), s	13.5	0.0	0.0	11.1	0.0	6.3	0.1	14.1	5.6	13.5	15.2	15.2
Prop In Lane	1.00		0.00	1.00		1.00	1.00		1.00	1.00		0.06
Lane Grp Cap(c), veh/h	204	299	0	316	0	253	63	1368	610	269	905	943
V/C Ratio(X)	0.58	0.00	0.00	0.61	0.00	0.51	0.05	0.56	0.26	1.28	0.54	0.54
Avail Cap(c_a), veh/h	204	299	0	316	0	253	285	1368	610	269	905	943
HCM Platoon Ratio	1.00	1.00	1.00	1.00	1.00	1.00	1.00	1.00	1.00	1.00	1.00	1.00
Upstream Filter(I)	1.00	0.00	0.00	1.00	0.00	1.00	1.00	1.00	1.00	0.58	0.58	0.58
Uniform Delay (d), s/veh	36.5	0.0	0.0	32.3	0.0	30.2	37.1	18.3	15.8	33.3	12.1	12.1
Incr Delay (d2), s/veh	2.8	0.0	0.0	2.4	0.0	0.7	0.3	1.7	1.0	139.8	1.4	1.3
Initial Q Delay(d3),s/veh	0.0	0.0	0.0	0.0	0.0	0.0	0.0	0.0	0.0	0.0	0.0	0.0
%ile BackOfQ(95%),veh/ln	4.4	0.0	0.0	6.7	0.0	4.1	0.1	9.3	3.6	22.9	8.4	8.6
Unsig. Movement Delay, s/veh												
LnGrp Delay(d),s/veh	39.4	0.0	0.0	34.7	0.0	31.0	37.4	20.0	16.8	173.1	13.4	13.4
LnGrp LOS	D	A	A	C	A	C	D	B	B	F	B	B
Approach Vol, veh/h		119			321			932			1343	
Approach Delay, s/veh		39.4			33.2			19.5			54.2	
Approach LOS		D			C			B			D	

Timer - Assigned Phs	1	2		4	5	6		8
Phs Duration (G+Y+Rc), s	20.0	40.0		20.0	9.5	50.5		20.0
Change Period (Y+Rc), s	4.5	5.5		4.5	4.5	5.5		4.5
Max Green Setting (Gmax), s	15.5	34.5		15.5	15.5	34.5		15.5
Max Q Clear Time (g_c+I1), s	15.5	16.1		15.5	2.1	17.2		13.1
Green Ext Time (p_c), s	0.0	1.1		0.0	0.0	1.1		0.0

Intersection Summary		
HCM 6th Ctrl Delay		39.1
HCM 6th LOS		D

APPENDIX C

CALTRANS ANALYSIS WORKSHEETS

HCS7 Basic Freeway Report

Project Information

Analyst	GT	Date	05/03/2018
Agency	LLG Engineers	Analysis Year	2017
Jurisdiction	Caltrans	Time Period Analyzed	Existing AM
Project Description	Kaiser Permanente Hesperia MOB Project/1-17-4246-1 I-15 Freeway North of Main St - NB		

Geometric Data

Number of Lanes (N), ln	3	Terrain Type	Level
Segment Length (L), ft	-	Percent Grade, %	-
Measured or Base Free-Flow Speed	Base	Grade Length, mi	-
Base Free-Flow Speed (BFFS), mi/h	75.4	Total Ramp Density (TRD), ramps/mi	0.83
Lane Width, ft	12	Free-Flow Speed (FFS), mi/h	72.6
Right-Side Lateral Clearance, ft	10		

Adjustment Factors

Driver Population	All Familiar	Final Speed Adjustment Factor (SAF)	1.000
Weather Type	Non-Severe Weather	Final Capacity Adjustment Factor (CAF)	1.000
Incident Type	No Incident	Demand Adjustment Factor (DAF)	1.000

Demand and Capacity

Volume (V), veh/h	1883	Heavy Vehicle Adjustment Factor (f_{HV})	0.974
Peak Hour Factor (PHF)	0.81	Flow Rate (v_p), pc/h/ln	796
Total Trucks, %	2.70	Capacity (c), pc/h/ln	2400
Single-Unit Trucks (SUT), %	-	Adjusted Capacity (c_{adj}), pc/h/ln	2400
Tractor-Trailers (TT), %	-	Volume-to-Capacity Ratio (v/c)	0.33
Passenger Car Equivalent (E_T)	2.000		

Speed and Density

Lane Width Adjustment (f_{LW})	0.0	Average Speed (S), mi/h	72.6
Right-Side Lateral Clearance Adj. (f_{RLC})	0.0	Density (D), pc/mi/ln	11.0
Total Ramp Density Adjustment	2.8	Level of Service (LOS)	A
Adjusted Free-Flow Speed (FFS_{adj}), mi/h	72.6		

Copyright © 2018 University of Florida. All Rights Reserved.

HCS7 Basic Freeway Report

Project Information

Analyst	GT	Date	05/03/2018
Agency	LLG Engineers	Analysis Year	2017
Jurisdiction	Caltrans	Time Period Analyzed	Existing AM
Project Description	Kaiser Permanente Hesperia MOB Project/1-17-4246-1		I-15 Freeway North of Main St - SB

Geometric Data

Number of Lanes (N), ln	3	Terrain Type	Level
Segment Length (L), ft	-	Percent Grade, %	-
Measured or Base Free-Flow Speed	Base	Grade Length, mi	-
Base Free-Flow Speed (BFFS), mi/h	75.4	Total Ramp Density (TRD), ramps/mi	1.00
Lane Width, ft	12	Free-Flow Speed (FFS), mi/h	72.2
Right-Side Lateral Clearance, ft	10		

Adjustment Factors

Driver Population	All Familiar	Final Speed Adjustment Factor (SAF)	1.000
Weather Type	Non-Severe Weather	Final Capacity Adjustment Factor (CAF)	1.000
Incident Type	No Incident	Demand Adjustment Factor (DAF)	1.000

Demand and Capacity

Volume (V), veh/h	2062	Heavy Vehicle Adjustment Factor (f_{HV})	0.971
Peak Hour Factor (PHF)	0.96	Flow Rate (v_p), pc/h/ln	737
Total Trucks, %	3.00	Capacity (c), pc/h/ln	2400
Single-Unit Trucks (SUT), %	-	Adjusted Capacity (c_{adj}), pc/h/ln	2400
Tractor-Trailers (TT), %	-	Volume-to-Capacity Ratio (v/c)	0.31
Passenger Car Equivalent (E_T)	2.000		

Speed and Density

Lane Width Adjustment (f_{LW})	0.0	Average Speed (S), mi/h	72.2
Right-Side Lateral Clearance Adj. (f_{RLC})	0.0	Density (D), pc/mi/ln	10.2
Total Ramp Density Adjustment	3.2	Level of Service (LOS)	A
Adjusted Free-Flow Speed (FFS_{adj}), mi/h	72.2		

Copyright © 2018 University of Florida. All Rights Reserved.

HCS7 Basic Freeway Report

Project Information

Analyst	GT	Date	05/03/2018
Agency	LLG Engineers	Analysis Year	2017
Jurisdiction	Caltrans	Time Period Analyzed	Existing PM
Project Description	Kaiser Permanente Hesperia MOB Project/1-17-4246-1		I-15 Freeway North of Main St - NB

Geometric Data

Number of Lanes (N), ln	3	Terrain Type	Level
Segment Length (L), ft	-	Percent Grade, %	-
Measured or Base Free-Flow Speed	Base	Grade Length, mi	-
Base Free-Flow Speed (BFFS), mi/h	75.4	Total Ramp Density (TRD), ramps/mi	0.83
Lane Width, ft	12	Free-Flow Speed (FFS), mi/h	72.6
Right-Side Lateral Clearance, ft	10		

Adjustment Factors

Driver Population	All Familiar	Final Speed Adjustment Factor (SAF)	1.000
Weather Type	Non-Severe Weather	Final Capacity Adjustment Factor (CAF)	1.000
Incident Type	No Incident	Demand Adjustment Factor (DAF)	1.000

Demand and Capacity

Volume (V), veh/h	1896	Heavy Vehicle Adjustment Factor (f_{HV})	0.972
Peak Hour Factor (PHF)	0.96	Flow Rate (v_p), pc/h/ln	677
Total Trucks, %	2.90	Capacity (c), pc/h/ln	2400
Single-Unit Trucks (SUT), %	-	Adjusted Capacity (c_{adj}), pc/h/ln	2400
Tractor-Trailers (TT), %	-	Volume-to-Capacity Ratio (v/c)	0.28
Passenger Car Equivalent (E_T)	2.000		

Speed and Density

Lane Width Adjustment (f_{LW})	0.0	Average Speed (S), mi/h	72.6
Right-Side Lateral Clearance Adj. (f_{RLC})	0.0	Density (D), pc/mi/ln	9.3
Total Ramp Density Adjustment	2.8	Level of Service (LOS)	A
Adjusted Free-Flow Speed (FFS_{adj}), mi/h	72.6		

Copyright © 2018 University of Florida. All Rights Reserved.

HCS7 Basic Freeway Report

Project Information

Analyst	GT	Date	05/03/2018
Agency	LLG Engineers	Analysis Year	2017
Jurisdiction	Caltrans	Time Period Analyzed	Existing PM
Project Description	Kaiser Permanente Hesperia MOB Project/1-17-4246-1		I-15 Freeway North of Main St - SB

Geometric Data

Number of Lanes (N), ln	3	Terrain Type	Level
Segment Length (L), ft	-	Percent Grade, %	-
Measured or Base Free-Flow Speed	Base	Grade Length, mi	-
Base Free-Flow Speed (BFFS), mi/h	75.4	Total Ramp Density (TRD), ramps/mi	1.00
Lane Width, ft	12	Free-Flow Speed (FFS), mi/h	72.2
Right-Side Lateral Clearance, ft	10		

Adjustment Factors

Driver Population	All Familiar	Final Speed Adjustment Factor (SAF)	1.000
Weather Type	Non-Severe Weather	Final Capacity Adjustment Factor (CAF)	1.000
Incident Type	No Incident	Demand Adjustment Factor (DAF)	1.000

Demand and Capacity

Volume (V), veh/h	2661	Heavy Vehicle Adjustment Factor (f_{HV})	0.963
Peak Hour Factor (PHF)	0.93	Flow Rate (v_p), pc/h/ln	990
Total Trucks, %	3.80	Capacity (c), pc/h/ln	2400
Single-Unit Trucks (SUT), %	-	Adjusted Capacity (c_{adj}), pc/h/ln	2400
Tractor-Trailers (TT), %	-	Volume-to-Capacity Ratio (v/c)	0.41
Passenger Car Equivalent (E_T)	2.000		

Speed and Density

Lane Width Adjustment (f_{LW})	0.0	Average Speed (S), mi/h	72.2
Right-Side Lateral Clearance Adj. (f_{RLC})	0.0	Density (D), pc/mi/ln	13.7
Total Ramp Density Adjustment	3.2	Level of Service (LOS)	B
Adjusted Free-Flow Speed (FFS_{adj}), mi/h	72.2		

Copyright © 2018 University of Florida. All Rights Reserved.

HCS7 Basic Freeway Report

Project Information

Analyst	GT	Date	05/03/2018
Agency	LLG Engineers	Analysis Year	2017
Jurisdiction	Caltrans	Time Period Analyzed	Existing with Project AM
Project Description	Kaiser Permanente Hesperia MOB Project/1-17-4246-1		I-15 Freeway North of Main St - NB

Geometric Data

Number of Lanes (N), ln	3	Terrain Type	Level
Segment Length (L), ft	-	Percent Grade, %	-
Measured or Base Free-Flow Speed	Base	Grade Length, mi	-
Base Free-Flow Speed (BFFS), mi/h	75.4	Total Ramp Density (TRD), ramps/mi	0.83
Lane Width, ft	12	Free-Flow Speed (FFS), mi/h	72.6
Right-Side Lateral Clearance, ft	10		

Adjustment Factors

Driver Population	All Familiar	Final Speed Adjustment Factor (SAF)	1.000
Weather Type	Non-Severe Weather	Final Capacity Adjustment Factor (CAF)	1.000
Incident Type	No Incident	Demand Adjustment Factor (DAF)	1.000

Demand and Capacity

Volume (V), veh/h	1891	Heavy Vehicle Adjustment Factor (f_{HV})	0.974
Peak Hour Factor (PHF)	0.81	Flow Rate (v_p), pc/h/ln	799
Total Trucks, %	2.70	Capacity (c), pc/h/ln	2400
Single-Unit Trucks (SUT), %	-	Adjusted Capacity (c_{adj}), pc/h/ln	2400
Tractor-Trailers (TT), %	-	Volume-to-Capacity Ratio (v/c)	0.33
Passenger Car Equivalent (E_T)	2.000		

Speed and Density

Lane Width Adjustment (f_{LW})	0.0	Average Speed (S), mi/h	72.6
Right-Side Lateral Clearance Adj. (f_{RLC})	0.0	Density (D), pc/mi/ln	11.0
Total Ramp Density Adjustment	2.8	Level of Service (LOS)	A
Adjusted Free-Flow Speed (FFS_{adj}), mi/h	72.6		

Copyright © 2018 University of Florida. All Rights Reserved.

HCS7 Basic Freeway Report

Project Information

Analyst	GT	Date	05/03/2018
Agency	LLG Engineers	Analysis Year	2017
Jurisdiction	Caltrans	Time Period Analyzed	Existing with Project AM
Project Description	Kaiser Permanente Hesperia MOB Project/1-17-4246-1		I-15 Freeway North of Main St - SB

Geometric Data

Number of Lanes (N), ln	3	Terrain Type	Level
Segment Length (L), ft	-	Percent Grade, %	-
Measured or Base Free-Flow Speed	Base	Grade Length, mi	-
Base Free-Flow Speed (BFFS), mi/h	75.4	Total Ramp Density (TRD), ramps/mi	1.00
Lane Width, ft	12	Free-Flow Speed (FFS), mi/h	72.2
Right-Side Lateral Clearance, ft	10		

Adjustment Factors

Driver Population	All Familiar	Final Speed Adjustment Factor (SAF)	1.000
Weather Type	Non-Severe Weather	Final Capacity Adjustment Factor (CAF)	1.000
Incident Type	No Incident	Demand Adjustment Factor (DAF)	1.000

Demand and Capacity

Volume (V), veh/h	2093	Heavy Vehicle Adjustment Factor (f_{HV})	0.971
Peak Hour Factor (PHF)	0.96	Flow Rate (v_p), pc/h/ln	748
Total Trucks, %	3.00	Capacity (c), pc/h/ln	2400
Single-Unit Trucks (SUT), %	-	Adjusted Capacity (c_{adj}), pc/h/ln	2400
Tractor-Trailers (TT), %	-	Volume-to-Capacity Ratio (v/c)	0.31
Passenger Car Equivalent (E_T)	2.000		

Speed and Density

Lane Width Adjustment (f_{LW})	0.0	Average Speed (S), mi/h	72.2
Right-Side Lateral Clearance Adj. (f_{RLC})	0.0	Density (D), pc/mi/ln	10.4
Total Ramp Density Adjustment	3.2	Level of Service (LOS)	A
Adjusted Free-Flow Speed (FFS_{adj}), mi/h	72.2		

Copyright © 2018 University of Florida. All Rights Reserved.

HCS7 Basic Freeway Report

Project Information

Analyst	GT	Date	05/03/2018
Agency	LLG Engineers	Analysis Year	2017
Jurisdiction	Caltrans	Time Period Analyzed	Existing with Project PM
Project Description	Kaiser Permanente Hesperia MOB Project/1-17-4246-1		I-15 Freeway North of Main St - NB

Geometric Data

Number of Lanes (N), ln	3	Terrain Type	Level
Segment Length (L), ft	-	Percent Grade, %	-
Measured or Base Free-Flow Speed	Base	Grade Length, mi	-
Base Free-Flow Speed (BFFS), mi/h	75.4	Total Ramp Density (TRD), ramps/mi	0.83
Lane Width, ft	12	Free-Flow Speed (FFS), mi/h	72.6
Right-Side Lateral Clearance, ft	10		

Adjustment Factors

Driver Population	All Familiar	Final Speed Adjustment Factor (SAF)	1.000
Weather Type	Non-Severe Weather	Final Capacity Adjustment Factor (CAF)	1.000
Incident Type	No Incident	Demand Adjustment Factor (DAF)	1.000

Demand and Capacity

Volume (V), veh/h	1938	Heavy Vehicle Adjustment Factor (f_{HV})	0.972
Peak Hour Factor (PHF)	0.96	Flow Rate (v_p), pc/h/ln	692
Total Trucks, %	2.90	Capacity (c), pc/h/ln	2400
Single-Unit Trucks (SUT), %	-	Adjusted Capacity (c_{adj}), pc/h/ln	2400
Tractor-Trailers (TT), %	-	Volume-to-Capacity Ratio (v/c)	0.29
Passenger Car Equivalent (E_T)	2.000		

Speed and Density

Lane Width Adjustment (f_{LW})	0.0	Average Speed (S), mi/h	72.6
Right-Side Lateral Clearance Adj. (f_{RLC})	0.0	Density (D), pc/mi/ln	9.5
Total Ramp Density Adjustment	2.8	Level of Service (LOS)	A
Adjusted Free-Flow Speed (FFS_{adj}), mi/h	72.6		

Copyright © 2018 University of Florida. All Rights Reserved.

HCS7 Basic Freeway Report

Project Information

Analyst	GT	Date	05/03/2018
Agency	LLG Engineers	Analysis Year	2017
Jurisdiction	Caltrans	Time Period Analyzed	Existing with Project PM
Project Description	Kaiser Permanente Hesperia MOB Project/1-17-4246-1		I-15 Freeway North of Main St - SB

Geometric Data

Number of Lanes (N), ln	3	Terrain Type	Level
Segment Length (L), ft	-	Percent Grade, %	-
Measured or Base Free-Flow Speed	Base	Grade Length, mi	-
Base Free-Flow Speed (BFFS), mi/h	75.4	Total Ramp Density (TRD), ramps/mi	1.00
Lane Width, ft	12	Free-Flow Speed (FFS), mi/h	72.2
Right-Side Lateral Clearance, ft	10		

Adjustment Factors

Driver Population	All Familiar	Final Speed Adjustment Factor (SAF)	1.000
Weather Type	Non-Severe Weather	Final Capacity Adjustment Factor (CAF)	1.000
Incident Type	No Incident	Demand Adjustment Factor (DAF)	1.000

Demand and Capacity

Volume (V), veh/h	2678	Heavy Vehicle Adjustment Factor (f_{HV})	0.963
Peak Hour Factor (PHF)	0.93	Flow Rate (v_p), pc/h/ln	997
Total Trucks, %	3.80	Capacity (c), pc/h/ln	2400
Single-Unit Trucks (SUT), %	-	Adjusted Capacity (c_{adj}), pc/h/ln	2400
Tractor-Trailers (TT), %	-	Volume-to-Capacity Ratio (v/c)	0.42
Passenger Car Equivalent (E_T)	2.000		

Speed and Density

Lane Width Adjustment (f_{LW})	0.0	Average Speed (S), mi/h	72.2
Right-Side Lateral Clearance Adj. (f_{RLC})	0.0	Density (D), pc/mi/ln	13.8
Total Ramp Density Adjustment	3.2	Level of Service (LOS)	B
Adjusted Free-Flow Speed (FFS_{adj}), mi/h	72.2		

Copyright © 2018 University of Florida. All Rights Reserved.

HCS7 Basic Freeway Report

Project Information

Analyst	GT	Date	10/12/2017
Agency	LLG Engineers	Analysis Year	2020
Jurisdiction	Caltrans	Time Period Analyzed	Future Pre-Project AM
Project Description	Kaiser Permanente Hesperia MOB Project/1-17-4246-1		I-15 Freeway North of Main St - NB

Geometric Data

Number of Lanes (N), ln	3	Terrain Type	Level
Segment Length (L), ft	-	Percent Grade, %	-
Measured or Base Free-Flow Speed	Base	Grade Length, mi	-
Base Free-Flow Speed (BFFS), mi/h	75.4	Total Ramp Density (TRD), ramps/mi	0.83
Lane Width, ft	12	Free-Flow Speed (FFS), mi/h	72.6
Right-Side Lateral Clearance, ft	10		

Adjustment Factors

Driver Population	All Familiar	Final Speed Adjustment Factor (SAF)	1.000
Weather Type	Non-Severe Weather	Final Capacity Adjustment Factor (CAF)	1.000
Incident Type	No Incident	Demand Adjustment Factor (DAF)	1.000

Demand and Capacity

Volume (V), veh/h	1959	Heavy Vehicle Adjustment Factor (f_{HV})	0.974
Peak Hour Factor (PHF)	0.81	Flow Rate (v_p), pc/h/ln	828
Total Trucks, %	2.70	Capacity (c), pc/h/ln	2400
Single-Unit Trucks (SUT), %	-	Adjusted Capacity (c_{adj}), pc/h/ln	2400
Tractor-Trailers (TT), %	-	Volume-to-Capacity Ratio (v/c)	0.34
Passenger Car Equivalent (E_T)	2.000		

Speed and Density

Lane Width Adjustment (f_{LW})	0.0	Average Speed (S), mi/h	72.6
Right-Side Lateral Clearance Adj. (f_{RLC})	0.0	Density (D), pc/mi/ln	11.4
Total Ramp Density Adjustment	2.8	Level of Service (LOS)	B
Adjusted Free-Flow Speed (FFS_{adj}), mi/h	72.6		

Copyright © 2017 University of Florida. All Rights Reserved.

HCS7 Basic Freeway Report

Project Information

Analyst	GT	Date	10/12/2017
Agency	LLG Engineers	Analysis Year	2020
Jurisdiction	Caltrans	Time Period Analyzed	Future Pre-Project AM
Project Description	Kaiser Permanente Hesperia MOB Project/1-17-4246-1		I-15 Freeway North of Main St - SB

Geometric Data

Number of Lanes (N), ln	3	Terrain Type	Level
Segment Length (L), ft	-	Percent Grade, %	-
Measured or Base Free-Flow Speed	Base	Grade Length, mi	-
Base Free-Flow Speed (BFFS), mi/h	75.4	Total Ramp Density (TRD), ramps/mi	1.00
Lane Width, ft	12	Free-Flow Speed (FFS), mi/h	72.2
Right-Side Lateral Clearance, ft	10		

Adjustment Factors

Driver Population	All Familiar	Final Speed Adjustment Factor (SAF)	1.000
Weather Type	Non-Severe Weather	Final Capacity Adjustment Factor (CAF)	1.000
Incident Type	No Incident	Demand Adjustment Factor (DAF)	1.000

Demand and Capacity

Volume (V), veh/h	2145	Heavy Vehicle Adjustment Factor (f_{HV})	0.971
Peak Hour Factor (PHF)	0.96	Flow Rate (v_p), pc/h/ln	767
Total Trucks, %	3.00	Capacity (c), pc/h/ln	2400
Single-Unit Trucks (SUT), %	-	Adjusted Capacity (c_{adj}), pc/h/ln	2400
Tractor-Trailers (TT), %	-	Volume-to-Capacity Ratio (v/c)	0.32
Passenger Car Equivalent (E_T)	2.000		

Speed and Density

Lane Width Adjustment (f_{LW})	0.0	Average Speed (S), mi/h	72.2
Right-Side Lateral Clearance Adj. (f_{RLC})	0.0	Density (D), pc/mi/ln	10.6
Total Ramp Density Adjustment	3.2	Level of Service (LOS)	A
Adjusted Free-Flow Speed (FFS_{adj}), mi/h	72.2		

Copyright © 2017 University of Florida. All Rights Reserved.

HCS7 Basic Freeway Report

Project Information

Analyst	GT	Date	10/12/2017
Agency	LLG Engineers	Analysis Year	2020
Jurisdiction	Caltrans	Time Period Analyzed	Future Pre-Project PM
Project Description	Kaiser Permanente Hesperia MOB Project/1-17-4246-1		I-15 Freeway North of Main St - NB

Geometric Data

Number of Lanes (N), ln	3	Terrain Type	Level
Segment Length (L), ft	-	Percent Grade, %	-
Measured or Base Free-Flow Speed	Base	Grade Length, mi	-
Base Free-Flow Speed (BFFS), mi/h	75.4	Total Ramp Density (TRD), ramps/mi	0.83
Lane Width, ft	12	Free-Flow Speed (FFS), mi/h	72.6
Right-Side Lateral Clearance, ft	10		

Adjustment Factors

Driver Population	All Familiar	Final Speed Adjustment Factor (SAF)	1.000
Weather Type	Non-Severe Weather	Final Capacity Adjustment Factor (CAF)	1.000
Incident Type	No Incident	Demand Adjustment Factor (DAF)	1.000

Demand and Capacity

Volume (V), veh/h	1972	Heavy Vehicle Adjustment Factor (f_{HV})	0.972
Peak Hour Factor (PHF)	0.96	Flow Rate (v_p), pc/h/ln	704
Total Trucks, %	2.90	Capacity (c), pc/h/ln	2400
Single-Unit Trucks (SUT), %	-	Adjusted Capacity (c_{adj}), pc/h/ln	2400
Tractor-Trailers (TT), %	-	Volume-to-Capacity Ratio (v/c)	0.29
Passenger Car Equivalent (E_T)	2.000		

Speed and Density

Lane Width Adjustment (f_{LW})	0.0	Average Speed (S), mi/h	72.6
Right-Side Lateral Clearance Adj. (f_{RLC})	0.0	Density (D), pc/mi/ln	9.7
Total Ramp Density Adjustment	2.8	Level of Service (LOS)	A
Adjusted Free-Flow Speed (FFS_{adj}), mi/h	72.6		

Copyright © 2017 University of Florida. All Rights Reserved.

HCS7 Basic Freeway Report

Project Information

Analyst	GT	Date	10/12/2017
Agency	LLG Engineers	Analysis Year	2020
Jurisdiction	Caltrans	Time Period Analyzed	Future Pre-Project PM
Project Description	Kaiser Permanente Hesperia MOB Project/1-17-4246-1		I-15 Freeway North of Main St - SB

Geometric Data

Number of Lanes (N), ln	3	Terrain Type	Level
Segment Length (L), ft	-	Percent Grade, %	-
Measured or Base Free-Flow Speed	Base	Grade Length, mi	-
Base Free-Flow Speed (BFFS), mi/h	75.4	Total Ramp Density (TRD), ramps/mi	1.00
Lane Width, ft	12	Free-Flow Speed (FFS), mi/h	72.2
Right-Side Lateral Clearance, ft	10		

Adjustment Factors

Driver Population	All Familiar	Final Speed Adjustment Factor (SAF)	1.000
Weather Type	Non-Severe Weather	Final Capacity Adjustment Factor (CAF)	1.000
Incident Type	No Incident	Demand Adjustment Factor (DAF)	1.000

Demand and Capacity

Volume (V), veh/h	2769	Heavy Vehicle Adjustment Factor (f_{HV})	0.963
Peak Hour Factor (PHF)	0.93	Flow Rate (v_p), pc/h/ln	1031
Total Trucks, %	3.80	Capacity (c), pc/h/ln	2400
Single-Unit Trucks (SUT), %	-	Adjusted Capacity (c_{adj}), pc/h/ln	2400
Tractor-Trailers (TT), %	-	Volume-to-Capacity Ratio (v/c)	0.43
Passenger Car Equivalent (E_T)	2.000		

Speed and Density

Lane Width Adjustment (f_{LW})	0.0	Average Speed (S), mi/h	72.2
Right-Side Lateral Clearance Adj. (f_{RLC})	0.0	Density (D), pc/mi/ln	14.3
Total Ramp Density Adjustment	3.2	Level of Service (LOS)	B
Adjusted Free-Flow Speed (FFS_{adj}), mi/h	72.2		

Copyright © 2017 University of Florida. All Rights Reserved.

HCS7 Basic Freeway Report

Project Information

Analyst	GT	Date	10/12/2017
Agency	LLG Engineers	Analysis Year	2020
Jurisdiction	Caltrans	Time Period Analyzed	Future with Project AM
Project Description	Kaiser Permanente Hesperia MOB Project/1-17-4246-1		I-15 Freeway North of Main St - NB

Geometric Data

Number of Lanes (N), ln	3	Terrain Type	Level
Segment Length (L), ft	-	Percent Grade, %	-
Measured or Base Free-Flow Speed	Base	Grade Length, mi	-
Base Free-Flow Speed (BFFS), mi/h	75.4	Total Ramp Density (TRD), ramps/mi	0.83
Lane Width, ft	12	Free-Flow Speed (FFS), mi/h	72.6
Right-Side Lateral Clearance, ft	10		

Adjustment Factors

Driver Population	All Familiar	Final Speed Adjustment Factor (SAF)	1.000
Weather Type	Non-Severe Weather	Final Capacity Adjustment Factor (CAF)	1.000
Incident Type	No Incident	Demand Adjustment Factor (DAF)	1.000

Demand and Capacity

Volume (V), veh/h	1967	Heavy Vehicle Adjustment Factor (f_{HV})	0.974
Peak Hour Factor (PHF)	0.81	Flow Rate (v_p), pc/h/ln	831
Total Trucks, %	2.70	Capacity (c), pc/h/ln	2400
Single-Unit Trucks (SUT), %	-	Adjusted Capacity (c_{adj}), pc/h/ln	2400
Tractor-Trailers (TT), %	-	Volume-to-Capacity Ratio (v/c)	0.35
Passenger Car Equivalent (E_T)	2.000		

Speed and Density

Lane Width Adjustment (f_{LW})	0.0	Average Speed (S), mi/h	72.6
Right-Side Lateral Clearance Adj. (f_{RLC})	0.0	Density (D), pc/mi/ln	11.4
Total Ramp Density Adjustment	2.8	Level of Service (LOS)	B
Adjusted Free-Flow Speed (FFS_{adj}), mi/h	72.6		

Copyright © 2017 University of Florida. All Rights Reserved.

HCS7 Basic Freeway Report

Project Information

Analyst	GT	Date	10/12/2017
Agency	LLG Engineers	Analysis Year	2020
Jurisdiction	Caltrans	Time Period Analyzed	Future with Project AM
Project Description	Kaiser Permanente Hesperia MOB Project/1-17-4246-1		I-15 Freeway North of Main St - SB

Geometric Data

Number of Lanes (N), ln	3	Terrain Type	Level
Segment Length (L), ft	-	Percent Grade, %	-
Measured or Base Free-Flow Speed	Base	Grade Length, mi	-
Base Free-Flow Speed (BFFS), mi/h	75.4	Total Ramp Density (TRD), ramps/mi	1.00
Lane Width, ft	12	Free-Flow Speed (FFS), mi/h	72.2
Right-Side Lateral Clearance, ft	10		

Adjustment Factors

Driver Population	All Familiar	Final Speed Adjustment Factor (SAF)	1.000
Weather Type	Non-Severe Weather	Final Capacity Adjustment Factor (CAF)	1.000
Incident Type	No Incident	Demand Adjustment Factor (DAF)	1.000

Demand and Capacity

Volume (V), veh/h	2176	Heavy Vehicle Adjustment Factor (f_{HV})	0.971
Peak Hour Factor (PHF)	0.96	Flow Rate (v_p), pc/h/ln	778
Total Trucks, %	3.00	Capacity (c), pc/h/ln	2400
Single-Unit Trucks (SUT), %	-	Adjusted Capacity (c_{adj}), pc/h/ln	2400
Tractor-Trailers (TT), %	-	Volume-to-Capacity Ratio (v/c)	0.32
Passenger Car Equivalent (E_T)	2.000		

Speed and Density

Lane Width Adjustment (f_{LW})	0.0	Average Speed (S), mi/h	72.2
Right-Side Lateral Clearance Adj. (f_{RLC})	0.0	Density (D), pc/mi/ln	10.8
Total Ramp Density Adjustment	3.2	Level of Service (LOS)	A
Adjusted Free-Flow Speed (FFS_{adj}), mi/h	72.2		

Copyright © 2017 University of Florida. All Rights Reserved.

HCS7 Basic Freeway Report

Project Information

Analyst	GT	Date	10/12/2017
Agency	LLG Engineers	Analysis Year	2020
Jurisdiction	Caltrans	Time Period Analyzed	Future with Project PM
Project Description	Kaiser Permanente Hesperia MOB Project/1-17-4246-1		I-15 Freeway North of Main St - NB

Geometric Data

Number of Lanes (N), ln	3	Terrain Type	Level
Segment Length (L), ft	-	Percent Grade, %	-
Measured or Base Free-Flow Speed	Base	Grade Length, mi	-
Base Free-Flow Speed (BFFS), mi/h	75.4	Total Ramp Density (TRD), ramps/mi	0.83
Lane Width, ft	12	Free-Flow Speed (FFS), mi/h	72.6
Right-Side Lateral Clearance, ft	10		

Adjustment Factors

Driver Population	All Familiar	Final Speed Adjustment Factor (SAF)	1.000
Weather Type	Non-Severe Weather	Final Capacity Adjustment Factor (CAF)	1.000
Incident Type	No Incident	Demand Adjustment Factor (DAF)	1.000

Demand and Capacity

Volume (V), veh/h	2014	Heavy Vehicle Adjustment Factor (f_{HV})	0.972
Peak Hour Factor (PHF)	0.96	Flow Rate (v_p), pc/h/ln	719
Total Trucks, %	2.90	Capacity (c), pc/h/ln	2400
Single-Unit Trucks (SUT), %	-	Adjusted Capacity (c_{adj}), pc/h/ln	2400
Tractor-Trailers (TT), %	-	Volume-to-Capacity Ratio (v/c)	0.30
Passenger Car Equivalent (E_T)	2.000		

Speed and Density

Lane Width Adjustment (f_{LW})	0.0	Average Speed (S), mi/h	72.6
Right-Side Lateral Clearance Adj. (f_{RLC})	0.0	Density (D), pc/mi/ln	9.9
Total Ramp Density Adjustment	2.8	Level of Service (LOS)	A
Adjusted Free-Flow Speed (FFS_{adj}), mi/h	72.6		

Copyright © 2017 University of Florida. All Rights Reserved.

HCS7 Basic Freeway Report

Project Information

Analyst	GT	Date	10/12/2017
Agency	LLG Engineers	Analysis Year	2020
Jurisdiction	Caltrans	Time Period Analyzed	Future with Project PM
Project Description	Kaiser Permanente Hesperia MOB Project/1-17-4246-1		I-15 Freeway North of Main St - SB

Geometric Data

Number of Lanes (N), ln	3	Terrain Type	Level
Segment Length (L), ft	-	Percent Grade, %	-
Measured or Base Free-Flow Speed	Base	Grade Length, mi	-
Base Free-Flow Speed (BFFS), mi/h	75.4	Total Ramp Density (TRD), ramps/mi	1.00
Lane Width, ft	12	Free-Flow Speed (FFS), mi/h	72.2
Right-Side Lateral Clearance, ft	10		

Adjustment Factors

Driver Population	All Familiar	Final Speed Adjustment Factor (SAF)	1.000
Weather Type	Non-Severe Weather	Final Capacity Adjustment Factor (CAF)	1.000
Incident Type	No Incident	Demand Adjustment Factor (DAF)	1.000

Demand and Capacity

Volume (V), veh/h	2786	Heavy Vehicle Adjustment Factor (f_{HV})	0.963
Peak Hour Factor (PHF)	0.93	Flow Rate (v_p), pc/h/ln	1037
Total Trucks, %	3.80	Capacity (c), pc/h/ln	2400
Single-Unit Trucks (SUT), %	-	Adjusted Capacity (c_{adj}), pc/h/ln	2400
Tractor-Trailers (TT), %	-	Volume-to-Capacity Ratio (v/c)	0.43
Passenger Car Equivalent (E_T)	2.000		

Speed and Density

Lane Width Adjustment (f_{LW})	0.0	Average Speed (S), mi/h	72.2
Right-Side Lateral Clearance Adj. (f_{RLC})	0.0	Density (D), pc/mi/ln	14.4
Total Ramp Density Adjustment	3.2	Level of Service (LOS)	B
Adjusted Free-Flow Speed (FFS_{adj}), mi/h	72.2		

Copyright © 2017 University of Florida. All Rights Reserved.

HCS7 Basic Freeway Report

Project Information

Analyst	GT	Date	05/03/2018
Agency	LLG Engineers	Analysis Year	2017
Jurisdiction	Caltrans	Time Period Analyzed	Existing AM
Project Description	Kaiser Permanente Hesperia MOB Project/1-17-4246-1		I-15 Freeway South of Main St - NB

Geometric Data

Number of Lanes (N), ln	3	Terrain Type	Level
Segment Length (L), ft	-	Percent Grade, %	-
Measured or Base Free-Flow Speed	Base	Grade Length, mi	-
Base Free-Flow Speed (BFFS), mi/h	75.4	Total Ramp Density (TRD), ramps/mi	1.17
Lane Width, ft	12	Free-Flow Speed (FFS), mi/h	71.7
Right-Side Lateral Clearance, ft	10		

Adjustment Factors

Driver Population	All Familiar	Final Speed Adjustment Factor (SAF)	1.000
Weather Type	Non-Severe Weather	Final Capacity Adjustment Factor (CAF)	1.000
Incident Type	No Incident	Demand Adjustment Factor (DAF)	1.000

Demand and Capacity

Volume (V), veh/h	2756	Heavy Vehicle Adjustment Factor (f_{HV})	0.956
Peak Hour Factor (PHF)	0.95	Flow Rate (v_p), pc/h/ln	1012
Total Trucks, %	4.60	Capacity (c), pc/h/ln	2400
Single-Unit Trucks (SUT), %	-	Adjusted Capacity (c_{adj}), pc/h/ln	2400
Tractor-Trailers (TT), %	-	Volume-to-Capacity Ratio (v/c)	0.42
Passenger Car Equivalent (E_T)	2.000		

Speed and Density

Lane Width Adjustment (f_{LW})	0.0	Average Speed (S), mi/h	71.7
Right-Side Lateral Clearance Adj. (f_{RLC})	0.0	Density (D), pc/mi/ln	14.1
Total Ramp Density Adjustment	3.7	Level of Service (LOS)	B
Adjusted Free-Flow Speed (FFS_{adj}), mi/h	71.7		

Copyright © 2018 University of Florida. All Rights Reserved.

HCS7 Basic Freeway Report

Project Information

Analyst	GT	Date	05/03/2018
Agency	LLG Engineers	Analysis Year	2017
Jurisdiction	Caltrans	Time Period Analyzed	Existing AM
Project Description	Kaiser Permanente Hesperia MOB Project/1-17-4246-1		I-15 Freeway South of Main St - SB

Geometric Data

Number of Lanes (N), ln	3	Terrain Type	Level
Segment Length (L), ft	-	Percent Grade, %	-
Measured or Base Free-Flow Speed	Base	Grade Length, mi	-
Base Free-Flow Speed (BFFS), mi/h	75.4	Total Ramp Density (TRD), ramps/mi	1.17
Lane Width, ft	12	Free-Flow Speed (FFS), mi/h	71.7
Right-Side Lateral Clearance, ft	10		

Adjustment Factors

Driver Population	All Familiar	Final Speed Adjustment Factor (SAF)	1.000
Weather Type	Non-Severe Weather	Final Capacity Adjustment Factor (CAF)	1.000
Incident Type	No Incident	Demand Adjustment Factor (DAF)	1.000

Demand and Capacity

Volume (V), veh/h	2814	Heavy Vehicle Adjustment Factor (f_{HV})	0.959
Peak Hour Factor (PHF)	0.93	Flow Rate (v_p), pc/h/ln	1052
Total Trucks, %	4.30	Capacity (c), pc/h/ln	2400
Single-Unit Trucks (SUT), %	-	Adjusted Capacity (c_{adj}), pc/h/ln	2400
Tractor-Trailers (TT), %	-	Volume-to-Capacity Ratio (v/c)	0.44
Passenger Car Equivalent (E_T)	2.000		

Speed and Density

Lane Width Adjustment (f_{LW})	0.0	Average Speed (S), mi/h	71.7
Right-Side Lateral Clearance Adj. (f_{RLC})	0.0	Density (D), pc/mi/ln	14.7
Total Ramp Density Adjustment	3.7	Level of Service (LOS)	B
Adjusted Free-Flow Speed (FFS_{adj}), mi/h	71.7		

Copyright © 2018 University of Florida. All Rights Reserved.

HCS7 Basic Freeway Report

Project Information

Analyst	GT	Date	05/03/2018
Agency	LLG Engineers	Analysis Year	2017
Jurisdiction	Caltrans	Time Period Analyzed	Existing PM
Project Description	Kaiser Permanente Hesperia MOB Project/1-17-4246-1		I-15 Freeway South of Main St - NB

Geometric Data

Number of Lanes (N), ln	3	Terrain Type	Level
Segment Length (L), ft	-	Percent Grade, %	-
Measured or Base Free-Flow Speed	Base	Grade Length, mi	-
Base Free-Flow Speed (BFFS), mi/h	75.4	Total Ramp Density (TRD), ramps/mi	1.17
Lane Width, ft	12	Free-Flow Speed (FFS), mi/h	71.7
Right-Side Lateral Clearance, ft	10		

Adjustment Factors

Driver Population	All Familiar	Final Speed Adjustment Factor (SAF)	1.000
Weather Type	Non-Severe Weather	Final Capacity Adjustment Factor (CAF)	1.000
Incident Type	No Incident	Demand Adjustment Factor (DAF)	1.000

Demand and Capacity

Volume (V), veh/h	3861	Heavy Vehicle Adjustment Factor (f_{HV})	0.948
Peak Hour Factor (PHF)	0.99	Flow Rate (v_p), pc/h/ln	1371
Total Trucks, %	5.50	Capacity (c), pc/h/ln	2400
Single-Unit Trucks (SUT), %	-	Adjusted Capacity (c_{adj}), pc/h/ln	2400
Tractor-Trailers (TT), %	-	Volume-to-Capacity Ratio (v/c)	0.57
Passenger Car Equivalent (E_T)	2.000		

Speed and Density

Lane Width Adjustment (f_{LW})	0.0	Average Speed (S), mi/h	71.0
Right-Side Lateral Clearance Adj. (f_{RLC})	0.0	Density (D), pc/mi/ln	19.3
Total Ramp Density Adjustment	3.7	Level of Service (LOS)	C
Adjusted Free-Flow Speed (FFS_{adj}), mi/h	71.7		

Copyright © 2018 University of Florida. All Rights Reserved.

HCS7 Basic Freeway Report

Project Information

Analyst	GT	Date	05/03/2018
Agency	LLG Engineers	Analysis Year	2017
Jurisdiction	Caltrans	Time Period Analyzed	Existing PM
Project Description	Kaiser Permanente Hesperia MOB Project/1-17-4246-1		I-15 Freeway South of Main St - SB

Geometric Data

Number of Lanes (N), ln	3	Terrain Type	Level
Segment Length (L), ft	-	Percent Grade, %	-
Measured or Base Free-Flow Speed	Base	Grade Length, mi	-
Base Free-Flow Speed (BFFS), mi/h	75.4	Total Ramp Density (TRD), ramps/mi	1.17
Lane Width, ft	12	Free-Flow Speed (FFS), mi/h	71.7
Right-Side Lateral Clearance, ft	10		

Adjustment Factors

Driver Population	All Familiar	Final Speed Adjustment Factor (SAF)	1.000
Weather Type	Non-Severe Weather	Final Capacity Adjustment Factor (CAF)	1.000
Incident Type	No Incident	Demand Adjustment Factor (DAF)	1.000

Demand and Capacity

Volume (V), veh/h	2344	Heavy Vehicle Adjustment Factor (f_{HV})	0.962
Peak Hour Factor (PHF)	0.93	Flow Rate (v_p), pc/h/ln	873
Total Trucks, %	4.00	Capacity (c), pc/h/ln	2400
Single-Unit Trucks (SUT), %	-	Adjusted Capacity (c_{adj}), pc/h/ln	2400
Tractor-Trailers (TT), %	-	Volume-to-Capacity Ratio (v/c)	0.36
Passenger Car Equivalent (E_T)	2.000		

Speed and Density

Lane Width Adjustment (f_{LW})	0.0	Average Speed (S), mi/h	71.7
Right-Side Lateral Clearance Adj. (f_{RLC})	0.0	Density (D), pc/mi/ln	12.2
Total Ramp Density Adjustment	3.7	Level of Service (LOS)	B
Adjusted Free-Flow Speed (FFS_{adj}), mi/h	71.7		

Copyright © 2018 University of Florida. All Rights Reserved.

HCS7 Basic Freeway Report

Project Information

Analyst	GT	Date	05/03/2018
Agency	LLG Engineers	Analysis Year	2017
Jurisdiction	Caltrans	Time Period Analyzed	Existing with Project AM
Project Description	Kaiser Permanente Hesperia MOB Project/1-17-4246-1		I-15 Freeway South of Main St - NB

Geometric Data

Number of Lanes (N), ln	3	Terrain Type	Level
Segment Length (L), ft	-	Percent Grade, %	-
Measured or Base Free-Flow Speed	Base	Grade Length, mi	-
Base Free-Flow Speed (BFFS), mi/h	75.4	Total Ramp Density (TRD), ramps/mi	1.17
Lane Width, ft	12	Free-Flow Speed (FFS), mi/h	71.7
Right-Side Lateral Clearance, ft	10		

Adjustment Factors

Driver Population	All Familiar	Final Speed Adjustment Factor (SAF)	1.000
Weather Type	Non-Severe Weather	Final Capacity Adjustment Factor (CAF)	1.000
Incident Type	No Incident	Demand Adjustment Factor (DAF)	1.000

Demand and Capacity

Volume (V), veh/h	2787	Heavy Vehicle Adjustment Factor (f_{HV})	0.956
Peak Hour Factor (PHF)	0.95	Flow Rate (v_p), pc/h/ln	1023
Total Trucks, %	4.60	Capacity (c), pc/h/ln	2400
Single-Unit Trucks (SUT), %	-	Adjusted Capacity (c_{adj}), pc/h/ln	2400
Tractor-Trailers (TT), %	-	Volume-to-Capacity Ratio (v/c)	0.43
Passenger Car Equivalent (E_T)	2.000		

Speed and Density

Lane Width Adjustment (f_{LW})	0.0	Average Speed (S), mi/h	71.7
Right-Side Lateral Clearance Adj. (f_{RLC})	0.0	Density (D), pc/mi/ln	14.3
Total Ramp Density Adjustment	3.7	Level of Service (LOS)	B
Adjusted Free-Flow Speed (FFS_{adj}), mi/h	71.7		

Copyright © 2018 University of Florida. All Rights Reserved.

HCS7 Basic Freeway Report

Project Information

Analyst	GT	Date	05/03/2018
Agency	LLG Engineers	Analysis Year	2017
Jurisdiction	Caltrans	Time Period Analyzed	Existing with Project AM
Project Description	Kaiser Permanente Hesperia MOB Project/1-17-4246-1	I-15 Freeway South of Main St - SB	

Geometric Data

Number of Lanes (N), ln	3	Terrain Type	Level
Segment Length (L), ft	-	Percent Grade, %	-
Measured or Base Free-Flow Speed	Base	Grade Length, mi	-
Base Free-Flow Speed (BFFS), mi/h	75.4	Total Ramp Density (TRD), ramps/mi	1.17
Lane Width, ft	12	Free-Flow Speed (FFS), mi/h	71.7
Right-Side Lateral Clearance, ft	10		

Adjustment Factors

Driver Population	All Familiar	Final Speed Adjustment Factor (SAF)	1.000
Weather Type	Non-Severe Weather	Final Capacity Adjustment Factor (CAF)	1.000
Incident Type	No Incident	Demand Adjustment Factor (DAF)	1.000

Demand and Capacity

Volume (V), veh/h	2822	Heavy Vehicle Adjustment Factor (f_{HV})	0.959
Peak Hour Factor (PHF)	0.93	Flow Rate (v_p), pc/h/ln	1055
Total Trucks, %	4.30	Capacity (c), pc/h/ln	2400
Single-Unit Trucks (SUT), %	-	Adjusted Capacity (c_{adj}), pc/h/ln	2400
Tractor-Trailers (TT), %	-	Volume-to-Capacity Ratio (v/c)	0.44
Passenger Car Equivalent (E_T)	2.000		

Speed and Density

Lane Width Adjustment (f_{LW})	0.0	Average Speed (S), mi/h	71.7
Right-Side Lateral Clearance Adj. (f_{RLC})	0.0	Density (D), pc/mi/ln	14.7
Total Ramp Density Adjustment	3.7	Level of Service (LOS)	B
Adjusted Free-Flow Speed (FFS_{adj}), mi/h	71.7		

Copyright © 2018 University of Florida. All Rights Reserved.

HCS7 Basic Freeway Report

Project Information

Analyst	GT	Date	05/03/2018
Agency	LLG Engineers	Analysis Year	2017
Jurisdiction	Caltrans	Time Period Analyzed	Existing with Project PM
Project Description	Kaiser Permanente Hesperia MOB Project/1-17-4246-1		I-15 Freeway South of Main St - NB

Geometric Data

Number of Lanes (N), ln	3	Terrain Type	Level
Segment Length (L), ft	-	Percent Grade, %	-
Measured or Base Free-Flow Speed	Base	Grade Length, mi	-
Base Free-Flow Speed (BFFS), mi/h	75.4	Total Ramp Density (TRD), ramps/mi	1.17
Lane Width, ft	12	Free-Flow Speed (FFS), mi/h	71.7
Right-Side Lateral Clearance, ft	10		

Adjustment Factors

Driver Population	All Familiar	Final Speed Adjustment Factor (SAF)	1.000
Weather Type	Non-Severe Weather	Final Capacity Adjustment Factor (CAF)	1.000
Incident Type	No Incident	Demand Adjustment Factor (DAF)	1.000

Demand and Capacity

Volume (V), veh/h	3878	Heavy Vehicle Adjustment Factor (f_{HV})	0.948
Peak Hour Factor (PHF)	0.99	Flow Rate (v_p), pc/h/ln	1377
Total Trucks, %	5.50	Capacity (c), pc/h/ln	2400
Single-Unit Trucks (SUT), %	-	Adjusted Capacity (c_{adj}), pc/h/ln	2400
Tractor-Trailers (TT), %	-	Volume-to-Capacity Ratio (v/c)	0.57
Passenger Car Equivalent (E_T)	2.000		

Speed and Density

Lane Width Adjustment (f_{LW})	0.0	Average Speed (S), mi/h	71.0
Right-Side Lateral Clearance Adj. (f_{RLC})	0.0	Density (D), pc/mi/ln	19.4
Total Ramp Density Adjustment	3.7	Level of Service (LOS)	C
Adjusted Free-Flow Speed (FFS_{adj}), mi/h	71.7		

Copyright © 2018 University of Florida. All Rights Reserved.

HCS7 Basic Freeway Report

Project Information

Analyst	GT	Date	05/03/2018
Agency	LLG Engineers	Analysis Year	2017
Jurisdiction	Caltrans	Time Period Analyzed	Existing with Project PM
Project Description	Kaiser Permanente Hesperia MOB Project/1-17-4246-1		I-15 Freeway South of Main St - SB

Geometric Data

Number of Lanes (N), ln	3	Terrain Type	Level
Segment Length (L), ft	-	Percent Grade, %	-
Measured or Base Free-Flow Speed	Base	Grade Length, mi	-
Base Free-Flow Speed (BFFS), mi/h	75.4	Total Ramp Density (TRD), ramps/mi	1.17
Lane Width, ft	12	Free-Flow Speed (FFS), mi/h	71.7
Right-Side Lateral Clearance, ft	10		

Adjustment Factors

Driver Population	All Familiar	Final Speed Adjustment Factor (SAF)	1.000
Weather Type	Non-Severe Weather	Final Capacity Adjustment Factor (CAF)	1.000
Incident Type	No Incident	Demand Adjustment Factor (DAF)	1.000

Demand and Capacity

Volume (V), veh/h	2386	Heavy Vehicle Adjustment Factor (f_{HV})	0.962
Peak Hour Factor (PHF)	0.93	Flow Rate (v_p), pc/h/ln	889
Total Trucks, %	4.00	Capacity (c), pc/h/ln	2400
Single-Unit Trucks (SUT), %	-	Adjusted Capacity (c_{adj}), pc/h/ln	2400
Tractor-Trailers (TT), %	-	Volume-to-Capacity Ratio (v/c)	0.37
Passenger Car Equivalent (E_T)	2.000		

Speed and Density

Lane Width Adjustment (f_{LW})	0.0	Average Speed (S), mi/h	71.7
Right-Side Lateral Clearance Adj. (f_{RLC})	0.0	Density (D), pc/mi/ln	12.4
Total Ramp Density Adjustment	3.7	Level of Service (LOS)	B
Adjusted Free-Flow Speed (FFS_{adj}), mi/h	71.7		

Copyright © 2018 University of Florida. All Rights Reserved.

HCS7 Basic Freeway Report

Project Information

Analyst	GT	Date	10/12/2017
Agency	LLG Engineers	Analysis Year	2020
Jurisdiction	Caltrans	Time Period Analyzed	Future Pre-Project AM
Project Description	Kaiser Permanente Hesperia MOB Project/1-17-4246-1		I-15 Freeway South of Main St - NB

Geometric Data

Number of Lanes (N), ln	3	Terrain Type	Level
Segment Length (L), ft	-	Percent Grade, %	-
Measured or Base Free-Flow Speed	Base	Grade Length, mi	-
Base Free-Flow Speed (BFFS), mi/h	75.4	Total Ramp Density (TRD), ramps/mi	1.17
Lane Width, ft	12	Free-Flow Speed (FFS), mi/h	71.7
Right-Side Lateral Clearance, ft	10		

Adjustment Factors

Driver Population	All Familiar	Final Speed Adjustment Factor (SAF)	1.000
Weather Type	Non-Severe Weather	Final Capacity Adjustment Factor (CAF)	1.000
Incident Type	No Incident	Demand Adjustment Factor (DAF)	1.000

Demand and Capacity

Volume (V), veh/h	2867	Heavy Vehicle Adjustment Factor (f_{HV})	0.956
Peak Hour Factor (PHF)	0.95	Flow Rate (v_p), pc/h/ln	1052
Total Trucks, %	4.60	Capacity (c), pc/h/ln	2400
Single-Unit Trucks (SUT), %	-	Adjusted Capacity (c_{adj}), pc/h/ln	2400
Tractor-Trailers (TT), %	-	Volume-to-Capacity Ratio (v/c)	0.44
Passenger Car Equivalent (E_T)	2.000		

Speed and Density

Lane Width Adjustment (f_{LW})	0.0	Average Speed (S), mi/h	71.7
Right-Side Lateral Clearance Adj. (f_{RLC})	0.0	Density (D), pc/mi/ln	14.7
Total Ramp Density Adjustment	3.7	Level of Service (LOS)	B
Adjusted Free-Flow Speed (FFS_{adj}), mi/h	71.7		

Copyright © 2017 University of Florida. All Rights Reserved.

HCS7 Basic Freeway Report

Project Information

Analyst	GT	Date	10/12/2017
Agency	LLG Engineers	Analysis Year	2020
Jurisdiction	Caltrans	Time Period Analyzed	Future Pre-Project AM
Project Description	Kaiser Permanente Hesperia MOB Project/1-17-4246-1		I-15 Freeway South of Main St - SB

Geometric Data

Number of Lanes (N), ln	3	Terrain Type	Level
Segment Length (L), ft	-	Percent Grade, %	-
Measured or Base Free-Flow Speed	Base	Grade Length, mi	-
Base Free-Flow Speed (BFFS), mi/h	75.4	Total Ramp Density (TRD), ramps/mi	1.17
Lane Width, ft	12	Free-Flow Speed (FFS), mi/h	71.7
Right-Side Lateral Clearance, ft	10		

Adjustment Factors

Driver Population	All Familiar	Final Speed Adjustment Factor (SAF)	1.000
Weather Type	Non-Severe Weather	Final Capacity Adjustment Factor (CAF)	1.000
Incident Type	No Incident	Demand Adjustment Factor (DAF)	1.000

Demand and Capacity

Volume (V), veh/h	2928	Heavy Vehicle Adjustment Factor (f_{HV})	0.959
Peak Hour Factor (PHF)	0.93	Flow Rate (v_p), pc/h/ln	1094
Total Trucks, %	4.30	Capacity (c), pc/h/ln	2400
Single-Unit Trucks (SUT), %	-	Adjusted Capacity (c_{adj}), pc/h/ln	2400
Tractor-Trailers (TT), %	-	Volume-to-Capacity Ratio (v/c)	0.46
Passenger Car Equivalent (E_T)	2.000		

Speed and Density

Lane Width Adjustment (f_{LW})	0.0	Average Speed (S), mi/h	71.7
Right-Side Lateral Clearance Adj. (f_{RLC})	0.0	Density (D), pc/mi/ln	15.3
Total Ramp Density Adjustment	3.7	Level of Service (LOS)	B
Adjusted Free-Flow Speed (FFS_{adj}), mi/h	71.7		

Copyright © 2017 University of Florida. All Rights Reserved.

HCS7 Basic Freeway Report

Project Information

Analyst	GT	Date	10/12/2017
Agency	LLG Engineers	Analysis Year	2020
Jurisdiction	Caltrans	Time Period Analyzed	Future Pre-Project PM
Project Description	Kaiser Permanente Hesperia MOB Project/1-17-4246-1		I-15 Freeway South of Main St - NB

Geometric Data

Number of Lanes (N), ln	3	Terrain Type	Level
Segment Length (L), ft	-	Percent Grade, %	-
Measured or Base Free-Flow Speed	Base	Grade Length, mi	-
Base Free-Flow Speed (BFFS), mi/h	75.4	Total Ramp Density (TRD), ramps/mi	1.17
Lane Width, ft	12	Free-Flow Speed (FFS), mi/h	71.7
Right-Side Lateral Clearance, ft	10		

Adjustment Factors

Driver Population	All Familiar	Final Speed Adjustment Factor (SAF)	1.000
Weather Type	Non-Severe Weather	Final Capacity Adjustment Factor (CAF)	1.000
Incident Type	No Incident	Demand Adjustment Factor (DAF)	1.000

Demand and Capacity

Volume (V), veh/h	4017	Heavy Vehicle Adjustment Factor (f_{HV})	0.948
Peak Hour Factor (PHF)	0.99	Flow Rate (v_p), pc/h/ln	1427
Total Trucks, %	5.50	Capacity (c), pc/h/ln	2400
Single-Unit Trucks (SUT), %	-	Adjusted Capacity (c_{adj}), pc/h/ln	2400
Tractor-Trailers (TT), %	-	Volume-to-Capacity Ratio (v/c)	0.59
Passenger Car Equivalent (E_T)	2.000		

Speed and Density

Lane Width Adjustment (f_{LW})	0.0	Average Speed (S), mi/h	70.7
Right-Side Lateral Clearance Adj. (f_{RLC})	0.0	Density (D), pc/mi/ln	20.2
Total Ramp Density Adjustment	3.7	Level of Service (LOS)	C
Adjusted Free-Flow Speed (FFS_{adj}), mi/h	71.7		

Copyright © 2017 University of Florida. All Rights Reserved.

HCS7 Basic Freeway Report

Project Information

Analyst	GT	Date	10/12/2017
Agency	LLG Engineers	Analysis Year	2020
Jurisdiction	Caltrans	Time Period Analyzed	Future Pre-Project PM
Project Description	Kaiser Permanente Hesperia MOB Project/1-17-4246-1		I-15 Freeway South of Main St - SB

Geometric Data

Number of Lanes (N), ln	3	Terrain Type	Level
Segment Length (L), ft	-	Percent Grade, %	-
Measured or Base Free-Flow Speed	Base	Grade Length, mi	-
Base Free-Flow Speed (BFFS), mi/h	75.4	Total Ramp Density (TRD), ramps/mi	1.17
Lane Width, ft	12	Free-Flow Speed (FFS), mi/h	71.7
Right-Side Lateral Clearance, ft	10		

Adjustment Factors

Driver Population	All Familiar	Final Speed Adjustment Factor (SAF)	1.000
Weather Type	Non-Severe Weather	Final Capacity Adjustment Factor (CAF)	1.000
Incident Type	No Incident	Demand Adjustment Factor (DAF)	1.000

Demand and Capacity

Volume (V), veh/h	2439	Heavy Vehicle Adjustment Factor (f_{HV})	0.962
Peak Hour Factor (PHF)	0.93	Flow Rate (v_p), pc/h/ln	909
Total Trucks, %	4.00	Capacity (c), pc/h/ln	2400
Single-Unit Trucks (SUT), %	-	Adjusted Capacity (c_{adj}), pc/h/ln	2400
Tractor-Trailers (TT), %	-	Volume-to-Capacity Ratio (v/c)	0.38
Passenger Car Equivalent (E_T)	2.000		

Speed and Density

Lane Width Adjustment (f_{LW})	0.0	Average Speed (S), mi/h	71.7
Right-Side Lateral Clearance Adj. (f_{RLC})	0.0	Density (D), pc/mi/ln	12.7
Total Ramp Density Adjustment	3.7	Level of Service (LOS)	B
Adjusted Free-Flow Speed (FFS_{adj}), mi/h	71.7		

Copyright © 2017 University of Florida. All Rights Reserved.

HCS7 Basic Freeway Report

Project Information

Analyst	GT	Date	10/12/2017
Agency	LLG Engineers	Analysis Year	2020
Jurisdiction	Caltrans	Time Period Analyzed	Future with Project AM
Project Description	Kaiser Permanente Hesperia MOB Project/1-17-4246-1		I-15 Freeway South of Main St - NB

Geometric Data

Number of Lanes (N), ln	3	Terrain Type	Level
Segment Length (L), ft	-	Percent Grade, %	-
Measured or Base Free-Flow Speed	Base	Grade Length, mi	-
Base Free-Flow Speed (BFFS), mi/h	75.4	Total Ramp Density (TRD), ramps/mi	1.17
Lane Width, ft	12	Free-Flow Speed (FFS), mi/h	71.7
Right-Side Lateral Clearance, ft	10		

Adjustment Factors

Driver Population	All Familiar	Final Speed Adjustment Factor (SAF)	1.000
Weather Type	Non-Severe Weather	Final Capacity Adjustment Factor (CAF)	1.000
Incident Type	No Incident	Demand Adjustment Factor (DAF)	1.000

Demand and Capacity

Volume (V), veh/h	2898	Heavy Vehicle Adjustment Factor (f_{HV})	0.956
Peak Hour Factor (PHF)	0.95	Flow Rate (v_p), pc/h/ln	1064
Total Trucks, %	4.60	Capacity (c), pc/h/ln	2400
Single-Unit Trucks (SUT), %	-	Adjusted Capacity (c_{adj}), pc/h/ln	2400
Tractor-Trailers (TT), %	-	Volume-to-Capacity Ratio (v/c)	0.44
Passenger Car Equivalent (E_T)	2.000		

Speed and Density

Lane Width Adjustment (f_{LW})	0.0	Average Speed (S), mi/h	71.7
Right-Side Lateral Clearance Adj. (f_{RLC})	0.0	Density (D), pc/mi/ln	14.8
Total Ramp Density Adjustment	3.7	Level of Service (LOS)	B
Adjusted Free-Flow Speed (FFS_{adj}), mi/h	71.7		

Copyright © 2017 University of Florida. All Rights Reserved.

HCS7 Basic Freeway Report

Project Information

Analyst	GT	Date	10/12/2017
Agency	LLG Engineers	Analysis Year	2020
Jurisdiction	Caltrans	Time Period Analyzed	Future with Project AM
Project Description	Kaiser Permanente Hesperia MOB Project/1-17-4246-1		I-15 Freeway South of Main St - SB

Geometric Data

Number of Lanes (N), ln	3	Terrain Type	Level
Segment Length (L), ft	-	Percent Grade, %	-
Measured or Base Free-Flow Speed	Base	Grade Length, mi	-
Base Free-Flow Speed (BFFS), mi/h	75.4	Total Ramp Density (TRD), ramps/mi	1.17
Lane Width, ft	12	Free-Flow Speed (FFS), mi/h	71.7
Right-Side Lateral Clearance, ft	10		

Adjustment Factors

Driver Population	All Familiar	Final Speed Adjustment Factor (SAF)	1.000
Weather Type	Non-Severe Weather	Final Capacity Adjustment Factor (CAF)	1.000
Incident Type	No Incident	Demand Adjustment Factor (DAF)	1.000

Demand and Capacity

Volume (V), veh/h	2936	Heavy Vehicle Adjustment Factor (f_{HV})	0.959
Peak Hour Factor (PHF)	0.93	Flow Rate (v_p), pc/h/ln	1097
Total Trucks, %	4.30	Capacity (c), pc/h/ln	2400
Single-Unit Trucks (SUT), %	-	Adjusted Capacity (c_{adj}), pc/h/ln	2400
Tractor-Trailers (TT), %	-	Volume-to-Capacity Ratio (v/c)	0.46
Passenger Car Equivalent (E_T)	2.000		

Speed and Density

Lane Width Adjustment (f_{LW})	0.0	Average Speed (S), mi/h	71.7
Right-Side Lateral Clearance Adj. (f_{RLC})	0.0	Density (D), pc/mi/ln	15.3
Total Ramp Density Adjustment	3.7	Level of Service (LOS)	B
Adjusted Free-Flow Speed (FFS_{adj}), mi/h	71.7		

Copyright © 2017 University of Florida. All Rights Reserved.

HCS7 Basic Freeway Report

Project Information

Analyst	GT	Date	10/12/2017
Agency	LLG Engineers	Analysis Year	2020
Jurisdiction	Caltrans	Time Period Analyzed	Future with Project PM
Project Description	Kaiser Permanente Hesperia MOB Project/1-17-4246-1		I-15 Freeway South of Main St - NB

Geometric Data

Number of Lanes (N), ln	3	Terrain Type	Level
Segment Length (L), ft	-	Percent Grade, %	-
Measured or Base Free-Flow Speed	Base	Grade Length, mi	-
Base Free-Flow Speed (BFFS), mi/h	75.4	Total Ramp Density (TRD), ramps/mi	1.17
Lane Width, ft	12	Free-Flow Speed (FFS), mi/h	71.7
Right-Side Lateral Clearance, ft	10		

Adjustment Factors

Driver Population	All Familiar	Final Speed Adjustment Factor (SAF)	1.000
Weather Type	Non-Severe Weather	Final Capacity Adjustment Factor (CAF)	1.000
Incident Type	No Incident	Demand Adjustment Factor (DAF)	1.000

Demand and Capacity

Volume (V), veh/h	4034	Heavy Vehicle Adjustment Factor (f_{HV})	0.948
Peak Hour Factor (PHF)	0.99	Flow Rate (v_p), pc/h/ln	1433
Total Trucks, %	5.50	Capacity (c), pc/h/ln	2400
Single-Unit Trucks (SUT), %	-	Adjusted Capacity (c_{adj}), pc/h/ln	2400
Tractor-Trailers (TT), %	-	Volume-to-Capacity Ratio (v/c)	0.60
Passenger Car Equivalent (E_T)	2.000		

Speed and Density

Lane Width Adjustment (f_{LW})	0.0	Average Speed (S), mi/h	70.7
Right-Side Lateral Clearance Adj. (f_{RLC})	0.0	Density (D), pc/mi/ln	20.3
Total Ramp Density Adjustment	3.7	Level of Service (LOS)	C
Adjusted Free-Flow Speed (FFS_{adj}), mi/h	71.7		

Copyright © 2017 University of Florida. All Rights Reserved.

HCS7 Basic Freeway Report

Project Information

Analyst	GT	Date	10/12/2017
Agency	LLG Engineers	Analysis Year	2020
Jurisdiction	Caltrans	Time Period Analyzed	Future with Project PM
Project Description	Kaiser Permanente Hesperia MOB Project/1-17-4246-1		I-15 Freeway South of Main St - SB

Geometric Data

Number of Lanes (N), ln	3	Terrain Type	Level
Segment Length (L), ft	-	Percent Grade, %	-
Measured or Base Free-Flow Speed	Base	Grade Length, mi	-
Base Free-Flow Speed (BFFS), mi/h	75.4	Total Ramp Density (TRD), ramps/mi	1.17
Lane Width, ft	12	Free-Flow Speed (FFS), mi/h	71.7
Right-Side Lateral Clearance, ft	10		

Adjustment Factors

Driver Population	All Familiar	Final Speed Adjustment Factor (SAF)	1.000
Weather Type	Non-Severe Weather	Final Capacity Adjustment Factor (CAF)	1.000
Incident Type	No Incident	Demand Adjustment Factor (DAF)	1.000

Demand and Capacity

Volume (V), veh/h	2481	Heavy Vehicle Adjustment Factor (f_{HV})	0.962
Peak Hour Factor (PHF)	0.93	Flow Rate (v_p), pc/h/ln	924
Total Trucks, %	4.00	Capacity (c), pc/h/ln	2400
Single-Unit Trucks (SUT), %	-	Adjusted Capacity (c_{adj}), pc/h/ln	2400
Tractor-Trailers (TT), %	-	Volume-to-Capacity Ratio (v/c)	0.39
Passenger Car Equivalent (E_T)	2.000		

Speed and Density

Lane Width Adjustment (f_{LW})	0.0	Average Speed (S), mi/h	71.7
Right-Side Lateral Clearance Adj. (f_{RLC})	0.0	Density (D), pc/mi/ln	12.9
Total Ramp Density Adjustment	3.7	Level of Service (LOS)	B
Adjusted Free-Flow Speed (FFS_{adj}), mi/h	71.7		

Copyright © 2017 University of Florida. All Rights Reserved.

Appendix Table C-1
CALCULATION OF OFF-RAMP VEHICLE QUEUING [a]
WEEKDAY AM AND PM PEAK HOURS

INT. NO.	OFF-RAMP LOCATION	PEAK HOUR	LANE GROUP MOVEMENT [b]	NO. OF LANES [b]	EXISTING YEAR 2018		EXISTING YEAR 2018 WITH PROJECT		FUTURE YEAR 2020 WITHOUT PROJECT		FUTURE YEAR 2020 WITH PROJECT	
					MAXIMUM BACK OF QUEUE [c] (Veh.)	MAXIMUM TOTAL QUEUE [d] (Veh.)	MAXIMUM BACK OF QUEUE [c] (Veh.)	MAXIMUM TOTAL QUEUE [d] (Veh.)	MAXIMUM BACK OF QUEUE [c] (Veh.)	MAXIMUM TOTAL QUEUE [d] (Veh.)	MAXIMUM BACK OF QUEUE [c] (Veh.)	MAXIMUM TOTAL QUEUE [d] (Veh.)
2	I-15 Freeway SB Off-Ramp/ Main Street	AM	Left	2	5.9	11.8	6.4	12.8	7.1	14.2	7.6	15.2
			Right	1	6.6	6.6	6.2	6.2	7.8	7.8	7.4	7.4
			Total AM Queuing			18.4		19.0		22.0		22.6
		PM	Left	2	7.7	15.4	8.0	16.0	10.4	20.8	10.9	21.8
			Right	1	14.0	14.0	14.0	14.0	16.1	16.1	16.1	16.1
			Total PM Queuing			29.4		30.0		36.9		37.9
3	I-15 Freeway NB Ramps/ Main Street	AM	Left	1	2.2	2.2	2.1	2.1	3.3	3.3	3.2	3.2
			Right	2	8.0	16.0	8.7	17.4	10.6	21.2	11.4	22.8
			Total AM Queuing			18.2		19.5		24.5		26.0
		PM	Left	1	7.2	7.2	7.1	7.1	7.7	7.7	7.7	7.7
			Right	2	16.3	32.6	16.6	33.2	22.4	44.8	23.1	46.2
			Total PM Queuing			39.8		40.3		52.5		53.9

[a] Queues calculated herein are utilized in the off-ramp queuing analysis presented in Table 11-3.
[b] Off-ramp movements and lane geometry were obtained from aerials provided by Caltrans Earth, 2017, and verified by LLG Engineers staff.
[c] The 95th percentile queue (in vehicles) as reported by the HCM methodology reflects the maximum back of queue for the lane with the highest queue in the lane group. Refer to the analysis worksheets contained in Appendix B.
[d] The 95th percentile maximum queue was obtained by multiplying the reported queue by the number of lanes in the lane group. The total peak hour queue was obtained by summing all lane group queues.

APPENDIX D

SUPPLEMENTAL REVIEW OF ESCONDIDO AVENUE AT ULTIMATE CONFIGURATION

Movement	EBL	EBT	EBR	WBL	WBT	WBR	NBL	NBT	NBR	SBL	SBT	SBR
Lane Configurations												
Traffic Volume (veh/h)	27	0	0	49	0	54	5	1104	107	137	719	52
Future Volume (veh/h)	27	0	0	49	0	54	5	1104	107	137	719	52
Initial Q (Qb), veh	0	0	0	0	0	0	0	0	0	0	0	0
Ped-Bike Adj(A_pbT)	1.00		1.00	1.00		1.00	1.00		1.00	1.00		1.00
Parking Bus, Adj	1.00	1.00	1.00	1.00	1.00	1.00	1.00	1.00	1.00	1.00	1.00	1.00
Work Zone On Approach		No			No			No			No	
Adj Sat Flow, veh/h/ln	1772	1772	1772	1673	1772	1772	1772	1772	1772	1673	1772	1772
Adj Flow Rate, veh/h	30	0	0	54	0	60	6	1227	119	152	799	58
Peak Hour Factor	0.90	0.90	0.90	0.90	0.90	0.90	0.90	0.90	0.90	0.90	0.90	0.90
Percent Heavy Veh, %	2	2	2	2	2	2	2	2	2	2	2	2
Cap, veh/h	90	62	0	137	0	52	63	2064	921	152	2137	155
Arrive On Green	0.03	0.00	0.00	0.03	0.00	0.03	0.04	0.61	0.61	0.10	0.67	0.67
Sat Flow, veh/h	1343	1772	0	1339	0	1502	1688	3367	1502	1594	3183	231
Grp Volume(v), veh/h	30	0	0	54	0	60	6	1227	119	152	423	434
Grp Sat Flow(s),veh/h/ln	1343	1772	0	1339	0	1502	1688	1683	1502	1594	1683	1730
Q Serve(g_s), s	0.0	0.0	0.0	2.8	0.0	2.8	0.3	17.7	2.7	7.6	8.8	8.8
Cycle Q Clear(g_c), s	2.8	0.0	0.0	2.8	0.0	2.8	0.3	17.7	2.7	7.6	8.8	8.8
Prop In Lane	1.00		0.00	1.00		1.00	1.00		1.00	1.00		0.13
Lane Grp Cap(c), veh/h	90	62	0	137	0	52	63	2064	921	152	1130	1162
V/C Ratio(X)	0.33	0.00	0.00	0.39	0.00	1.14	0.09	0.59	0.13	1.00	0.37	0.37
Avail Cap(c_a), veh/h	270	299	0	316	0	253	285	2064	921	269	1130	1162
HCM Platoon Ratio	1.00	1.00	1.00	1.00	1.00	1.00	1.00	1.00	1.00	1.00	1.00	1.00
Upstream Filter(I)	1.00	0.00	0.00	1.00	0.00	1.00	1.00	1.00	1.00	0.74	0.74	0.74
Uniform Delay (d), s/veh	40.0	0.0	0.0	38.8	0.0	38.6	37.2	9.4	6.5	36.2	5.8	5.8
Incr Delay (d2), s/veh	0.8	0.0	0.0	0.7	0.0	81.7	0.6	1.3	0.3	27.5	0.7	0.7
Initial Q Delay(d3),s/veh	0.0	0.0	0.0	0.0	0.0	0.0	0.0	0.0	0.0	0.0	0.0	0.0
%ile BackOfQ(95%),veh/ln	1.1	0.0	0.0	1.9	0.0	4.0	0.2	9.9	1.5	6.9	4.9	5.0
Unsig. Movement Delay, s/veh												
LnGrp Delay(d),s/veh	40.8	0.0	0.0	39.5	0.0	120.3	37.8	10.7	6.8	63.7	6.5	6.5
LnGrp LOS	D	A	A	D	A	F	D	B	A	E	A	A
Approach Vol, veh/h		30			114			1352			1009	
Approach Delay, s/veh		40.8			82.0			10.5			15.1	
Approach LOS		D			F			B			B	

Timer - Assigned Phs	1	2		4	5	6		8
Phs Duration (G+Y+Rc), s	14.1	56.6		9.3	9.5	61.2		9.3
Change Period (Y+Rc), s	4.5	5.5		4.5	4.5	5.5		4.5
Max Green Setting (Gmax), s	15.5	34.5		15.5	15.5	34.5		15.5
Max Q Clear Time (g_c+I1), s	9.6	19.7		4.8	2.3	10.8		4.8
Green Ext Time (p_c), s	0.0	1.9		0.0	0.0	0.9		0.0

Intersection Summary	
HCM 6th Ctrl Delay	15.9
HCM 6th LOS	B

Movement	EBL	EBT	EBR	WBL	WBT	WBR	NBL	NBT	NBR	SBL	SBT	SBR
Lane Configurations												
Traffic Volume (veh/h)	132	0	0	182	0	123	3	711	150	326	922	28
Future Volume (veh/h)	132	0	0	182	0	123	3	711	150	326	922	28
Initial Q (Qb), veh	0	0	0	0	0	0	0	0	0	0	0	0
Ped-Bike Adj(A_pbT)	1.00		1.00	1.00		1.00	1.00		1.00	1.00		1.00
Parking Bus, Adj	1.00	1.00	1.00	1.00	1.00	1.00	1.00	1.00	1.00	1.00	1.00	1.00
Work Zone On Approach		No			No			No			No	
Adj Sat Flow, veh/h/ln	1772	1772	1772	1673	1772	1772	1772	1772	1772	1673	1772	1772
Adj Flow Rate, veh/h	139	0	0	192	0	129	3	748	158	343	971	29
Peak Hour Factor	0.95	0.95	0.95	0.95	0.95	0.95	0.95	0.95	0.95	0.95	0.95	0.95
Percent Heavy Veh, %	2	2	2	2	2	2	2	2	2	2	2	2
Cap, veh/h	204	299	0	316	0	253	63	1368	610	269	1794	54
Arrive On Green	0.17	0.00	0.00	0.17	0.00	0.17	0.04	0.41	0.41	0.17	0.54	0.54
Sat Flow, veh/h	1261	1772	0	1339	0	1502	1688	3367	1502	1594	3338	100
Grp Volume(v), veh/h	139	0	0	192	0	129	3	748	158	343	490	510
Grp Sat Flow(s),veh/h/ln	1261	1772	0	1339	0	1502	1688	1683	1502	1594	1683	1754
Q Serve(g_s), s	7.2	0.0	0.0	11.1	0.0	6.3	0.1	13.6	5.6	13.5	15.2	15.2
Cycle Q Clear(g_c), s	13.5	0.0	0.0	11.1	0.0	6.3	0.1	13.6	5.6	13.5	15.2	15.2
Prop In Lane	1.00		0.00	1.00		1.00	1.00		1.00	1.00		0.06
Lane Grp Cap(c), veh/h	204	299	0	316	0	253	63	1368	610	269	905	943
V/C Ratio(X)	0.68	0.00	0.00	0.61	0.00	0.51	0.05	0.55	0.26	1.28	0.54	0.54
Avail Cap(c_a), veh/h	204	299	0	316	0	253	285	1368	610	269	905	943
HCM Platoon Ratio	1.00	1.00	1.00	1.00	1.00	1.00	1.00	1.00	1.00	1.00	1.00	1.00
Upstream Filter(I)	1.00	0.00	0.00	1.00	0.00	1.00	1.00	1.00	1.00	0.58	0.58	0.58
Uniform Delay (d), s/veh	37.0	0.0	0.0	32.3	0.0	30.2	37.1	18.1	15.8	33.3	12.1	12.1
Incr Delay (d2), s/veh	7.4	0.0	0.0	2.4	0.0	0.7	0.3	1.6	1.0	139.8	1.4	1.3
Initial Q Delay(d3),s/veh	0.0	0.0	0.0	0.0	0.0	0.0	0.0	0.0	0.0	0.0	0.0	0.0
%ile BackOfQ(95%),veh/ln	5.6	0.0	0.0	6.7	0.0	4.1	0.1	9.0	3.6	22.9	8.4	8.6
Unsig. Movement Delay, s/veh												
LnGrp Delay(d),s/veh	44.4	0.0	0.0	34.7	0.0	31.0	37.4	19.7	16.8	173.1	13.4	13.4
LnGrp LOS	D	A	A	C	A	C	D	B	B	F	B	B
Approach Vol, veh/h		139			321			909			1343	
Approach Delay, s/veh		44.4			33.2			19.2			54.2	
Approach LOS		D			C			B			D	

Timer - Assigned Phs	1	2		4	5	6		8
Phs Duration (G+Y+Rc), s	20.0	40.0		20.0	9.5	50.5		20.0
Change Period (Y+Rc), s	4.5	5.5		4.5	4.5	5.5		4.5
Max Green Setting (Gmax), s	15.5	34.5		15.5	15.5	34.5		15.5
Max Q Clear Time (g_c+I1), s	15.5	15.6		15.5	2.1	17.2		13.1
Green Ext Time (p_c), s	0.0	1.0		0.0	0.0	1.1		0.0

Intersection Summary		
HCM 6th Ctrl Delay		39.5
HCM 6th LOS		D