MARINA ISLAND BRIDGE

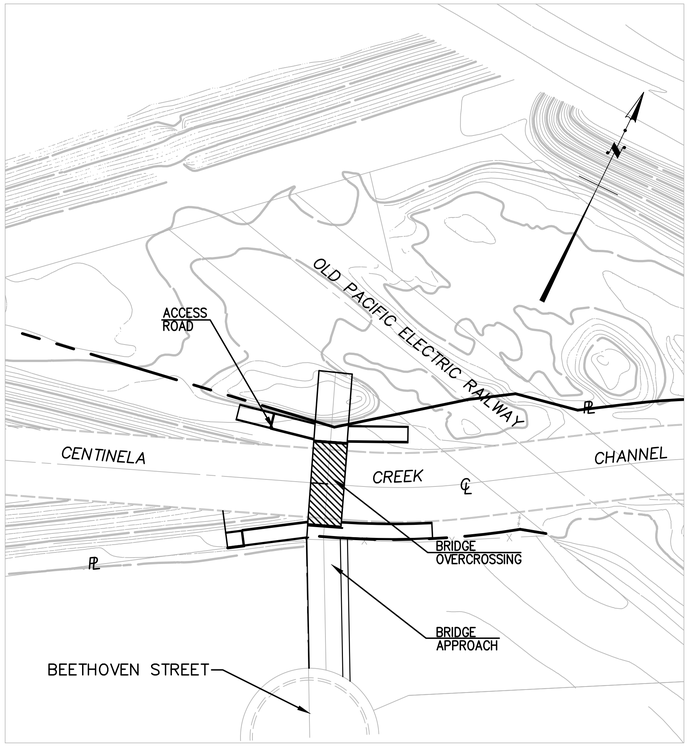

LOCATION MAP

SCALE: 1" = 60'-0"

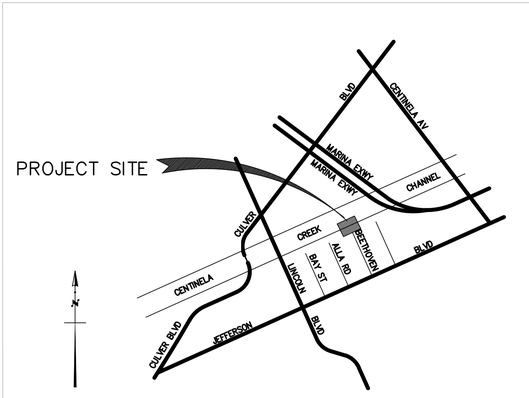

VICINITY MAP

NOT TO SCALE

THOMAS GUIDE LOS ANGELES EDITION
PAGE: 672 GRID: D7

GENERAL NOTES:

1. ALL CONSTRUCTION WORK SHALL CONFORM TO THE STANDARD SPECIFICATIONS FOR PUBLIC WORKS CONSTRUCTION, 1994 EDITION (SSPWC) WITH ALL CURRENT SUPPLEMENTS.
2. THE CONTRACTOR SHALL FIELD VERIFY DESIGN ELEVATIONS PRIOR TO CONSTRUCTION.
3. STATIONS SHOWN ON THE DRAWINGS ARE ALONG CENTER LINE OF CONSTRUCTION OR A LINE NORMAL TO CENTER LINE OF CONSTRUCTION.
4. THE STRUCTURAL NOTES WILL BE FOUND ON THE APPLICABLE SHEETS.
5. THE WORK SHOWN ON THESE DRAWINGS REQUIRE THE PRIME CONTRACTOR TO HAVE A VALID CLASS "A" LICENSE ISSUED BY THE STATE OF CALIFORNIA.
6. EXISTING UTILITIES SHALL BE MAINTAINED IN PLACE BY THE CONTRACTOR UNLESS OTHERWISE NOTED.
7. THE CONTRACTOR SHALL ASSUME SOLE AND COMPLETE RESPONSIBILITY FOR THE JOB SITE CONDITIONS, INCLUDING SAFETY OF ALL PERSONS AND PROPERTY, DURING THE COURSE OF CONSTRUCTION OF THIS PROJECT. THIS REQUIREMENT SHALL APPLY CONTINUOUSLY AND SHALL NOT BE LIMITED TO NORMAL WORKING HOURS.
8. PRIOR TO COMMENCING CONSTRUCTION, THE CONTRACTOR SHALL VERIFY ALL JOIN CONDITIONS FOR GRADING, DRAINAGE AND UNDERGROUND FACILITIES INCLUDING LOCATION AND ELEVATION OF EXISTING UNDERGROUND FACILITIES AT CROSSINGS WITH PROPOSED UNDERGROUND FACILITIES. IF CONDITIONS DIFFER FROM THOSE SHOWN ON THE PLANS, THE CONTRACTOR SHALL NOTIFY THE ENGINEER AND SHALL NOT BEGIN CONSTRUCTION UNTIL THE CHANGED CONDITIONS HAVE BEEN EVALUATED.
9. ALL DRAWINGS ARE CONSIDERED TO BE A PART OF THE CONTRACT DOCUMENTS. THE CONTRACTOR SHALL BE RESPONSIBLE FOR THE REVIEW AND COORDINATION OF ALL DRAWINGS AND SPECIFICATIONS PRIOR TO THE START OF CONSTRUCTION. DISCREPANCIES THAT OCCUR SHALL BE BROUGHT TO THE ATTENTION OF THE ENGINEER PRIOR TO START OF CONSTRUCTION SO THAT A CLARIFICATION CAN BE ISSUED.
10. NOTES AND DETAILS ON DRAWINGS SHALL TAKE PRECEDENCE OVER GENERAL NOTES AND TYPICAL DETAILS. WHERE NO DETAILS ARE GIVEN, CONSTRUCTION SHALL BE AS SHOWN FOR SIMILAR WORK.
11. THE EXISTENCE, LOCATION AND CHARACTERISTICS OF UNDERGROUND UTILITY INFORMATION SHOWN ON THESE PLANS HAS BEEN OBTAINED FROM A REVIEW OF AVAILABLE RECORD DATA. NO REPRESENTATION IS MADE AS TO THE ACCURACY OR COMPLETENESS OF SAID UTILITY INFORMATION. THE CONTRACTOR SHALL TAKE PRECAUTIONARY MEASURES TO PROTECT THE UTILITY LINES SHOWN AND ANY OTHER LINES NOT OF RECORD OR NOT SHOWN ON THESE PLANS.
12. THE CONTRACTOR SHALL OBTAIN AN O.S.H.A. PERMIT FROM THE CALIFORNIA DIVISION OF INDUSTRIAL SAFETY PRIOR TO THE CONSTRUCTION OF TRENCHES OR EXCAVATIONS WHICH ARE FIVE FEET OR DEEPER.
13. EXISTING TOPOGRAPHIC SURVEY IS PREPARED BY ENGINEERING SERVICE CORPORATION (ESC) FOR COLLINS FOODS, INTERNATIONAL, INC. DATED MAY 29, 1987. THE BACKGROUND TOPO INFORMATION WAS SCANNED FROM A PAPER COPY. DO NOT SCALE BACKGROUND TOPO INFORMATION.
14. TEMPORARY BENCH MARK REFERS TO NO. 23, ELEVATION 20.74 AS SHOWN ON THE TOPOGRAPHIC SURVEY PREPARED BY ENGINEERING SERVICE CORPORATION (ESC). T.B.M. IS APPROXIMATELY LOCATED ON THE CENTERLINE OF THE PACIFIC RAILROAD EASEMENT AND 20'± SOUTH OF THE CHANNEL SOUTH WALL.
15. FOUNDATION DESIGN BASED ON SOILS REPORT BY BYER GEOTECHNICAL INC. REPORT NO. BG22586, DATED APRIL 25, 2017.
16. PRIOR TO ANY CONSTRUCTION WORK, THE CURRENT CONDITION OF THE EXISTING RC CHANNEL SHALL BE INSPECTED AND DOCUMENTED. AFTER COMPLETION OF CONSTRUCTION, THE EXISTING CHANNEL SHALL BE RE-INSPECTED AND MONITORED FOR ANY POSSIBLE DAMAGES. IN THE EVENT THAT ANY DAMAGE IS IDENTIFIED AT ANY TIME, IMMEDIATE REPLACEMENT OR REPAIR TO THE SATISFACTION OF LACFCD/LACDPW WILL BE REQUIRED AT THE PERMITTEE'S EXPENSE.
17. THE CONTRACTOR SHALL BE EXTRA CAUTIOUS WORKING IN THE VICINITY OF EXISTING CHANNEL. FOR THE PURPOSE OF SOIL COMPACTION, THE CONTRACTOR SHALL USE HANDHELD EQUIPMENT WHEN WORKING ADJACENT TO THE EXISTING CHANNEL IN ORDER TO NOT CAUSE ANY STRUCTURAL DAMAGE TO THE CHANNEL.
18. WHEN DRIVING PILES BELOW 5 FEET FROM THE BOTTOM OF CHANNEL INVERT, THE SOILS ENGINEER SHALL BE PRESENT TO MAKE SURE THAT THERE IS NO SOIL HEAVING ACTION DURING PILE DRIVING OPERATIONS.
19. BRIDGE SHALL BE LABELED "NOT TO BE MAINTAINED BY LOS ANGELES COUNTY DEPARTMENT OF PUBLIC WORKS/LOS ANGELES COUNTY FLOOD CONTROL DISTRICT".

ABBREVIATIONS:

#	NUMBER
ø	DIAMETER
AB	AGGREGATE BASE
AC	ASPHALT CONCRETE
ANSI	AMERICAN NATIONAL STANDARDS INSTITUTE
APWA	AMERICAN PUBLIC WORKS ASSOCIATION
ASTM	AMERICAN SOCIETY FOR TESTING AND MATERIALS
AWWA	AMERICAN WATER WORKS ASSOCIATION
BC	BEGINNING OF CURVE
BCR	BEGINNING OF CURB RETURN
BLDG	BUILDING
BLVD	BOULEVARD
BOC	BACK OF CURB
C & G	CURB AND GUTTER
CB	CATCH BASIN
CL	CENTERLINE
CLF	CHAIN LINK FENCE
CAB	CRUSHED AGGREGATE BASE
CALTRANS	CALIFORNIA DEPARTMENT OF TRANSPORTATION
CF	CURB FACE
CLR	CLEAR or CLEARANCE
CMB	CRUSHED MISCELLANEOUS BASE
CONC	CONCRETE
CONST	CONSTRUCT
DET	DETAIL
DW	DOMESTIC WATER
EC	END OF CURVE
ECR	END OF CURB RETURN
EG	EXISTING GRADE
EL or ELEV	ELEVATION
EX. or EXIST.	EXISTING
FF	FINISH FLOOR
FG	FINISH GRADE
FH	FIRE HYDRANT
FL	FLOW LINE
FS	FINISH SURFACE
INV	INVERT
HP	HIGH POINT
LP	LOW POINT
LS	LANDSCAPE AREA
MAX	MAXIMUM
MH	MANHOLE
MIN	MINIMUM
NTS	NOT TO SCALE
OC	ON CENTER
P/L or PL	PROPERTY LINE
PCC	PORTLAND CEMENT CONCRETE
PP	POWER POLE
PROP	PROPOSED
PVC	POLYVINYL CHLORIDE
PVMT	PAVEMENT
R	RIDGE or RADIUS
REINF	REINFORCED/REINFORCEMENT
RET	RETAINING
R/W or ROW	RIGHT OF WAY
RCP	REINFORCED CONCRETE PIPE
SD	STORM DRAIN
SPECS	SPECIFICATIONS
SSPWC	STANDARD SPECIFICATIONS FOR PUBLIC WORKS CONSTRUCTION
STD	STANDARD
TC	TOP OF CURB
TG	TOP OF GRATE
TOE	TOE OF SLOPE
TOP	TOP OF PIPE or TOP OF SLOPE
W/	WITH
W/O	WITHOUT
WM	WATER METER
WL	WATER LEVEL

LEGEND:

19	EXISTING CONTOUR LINE @ 19
20	PROPOSED CONTOUR LINE @ 20
+ 19.72	SPOT GRADE @ 19.72
	EXISTING BUILDING
	EXISTING CURB
36"	EXISTING 36"ø TREE
	EXISTING STREET LIGHTING
WM	EXISTING WATER METER
X X X	EXISTING CHAIN LINK FENCE
X X	EXISTING CLF ON CONC BLOCK RET WALL
	EXISTING CATCH BASIN
	EXISTING MANHOLE
	DEPRESSION CONTOUR
	EXISTING CONCRETE BLOCK WALL
	EXISTING BUSHES/ SHRUBS
	PROPOSED CATCH BASIN
36"SD	PROPOSED 36"ø STORM DRAIN
	PROPOSED CURB
	PROPOSED CURB & GUTTER
	PROPOSED GUTTER
	PROPOSED CONCRETE WALKWAY
BM	BENCH MARK
19.75 TC / 19.25 FL	ELEVATIONS
3%	STREET ℄ GRADES
℄	CENTERLINE
R/W	RIGHT OF WAY LINE
PL	PROPERTY LINE
1%	FLOWLINE
	TOP OF SLOPE
21 / 20 / 19 (2:1)	SLOPE ARROW; SLOPE CALLOUTS; SLOPE CONTOURS
	TOE OF SLOPE
	RETAINING WALL
X X	PROPOSED CHAIN LINK FENCE

SHEET INDEX:

CIVIL

C-1	TITLE SHEET & ABBREVIATIONS, LEGEND & GENERAL NOTES
C-2	SITE PLAN
C-3	GRADING & PAVING PLAN
C-4	SECTIONS
C-5	DETAILS
C-6	DETAILS
C-7	RAMP SECTIONS AND DETAILS

STRUCTURE

S-1	STRUCTURAL GENERAL NOTES
S-2	FOUNDATION PLAN
S-3	SECTIONS & DETAILS
S-4	SECTIONS & DETAILS
S-5	RAMP PLANS

kpff
6080 Center Dr., Suite 700
Los Angeles, CA 90045
P:310.665.2800
F:310.665.9075
www.kpff.com

Revision No.	Date
1 SEPT. 23, 2015	SEPTEMBER 15, 2017

MARINA ISLAND BRIDGE
5300 BEETHOVEN STREET
Los Angeles, California

TITLE SHEET, ABBREVIATION, LEGEND & GENERAL NOTES

REGISTERED PROFESSIONAL ENGINEER
RICHARD HAYES DAVIS
No. C48082
Exp. 3/31/18
CIVIL
STATE OF CALIFORNIA

Job No.
971309/115417

C-1

NOTES:							
JOB #	JOB NAME	FILE PATH & NAME	PLOTTED DATE & TIME	UPDATED BY	PLOT SCALE	PROG.MG.	DRAFTER
971309	MARINA ISLAND BRIDGE	971309C1.DWG.DWG	NOV. 05, 1998 5:00:21 PM	YWF	1=1	RO/IC	FK

XREFS: CIVIL, TOPO, 971309TB,

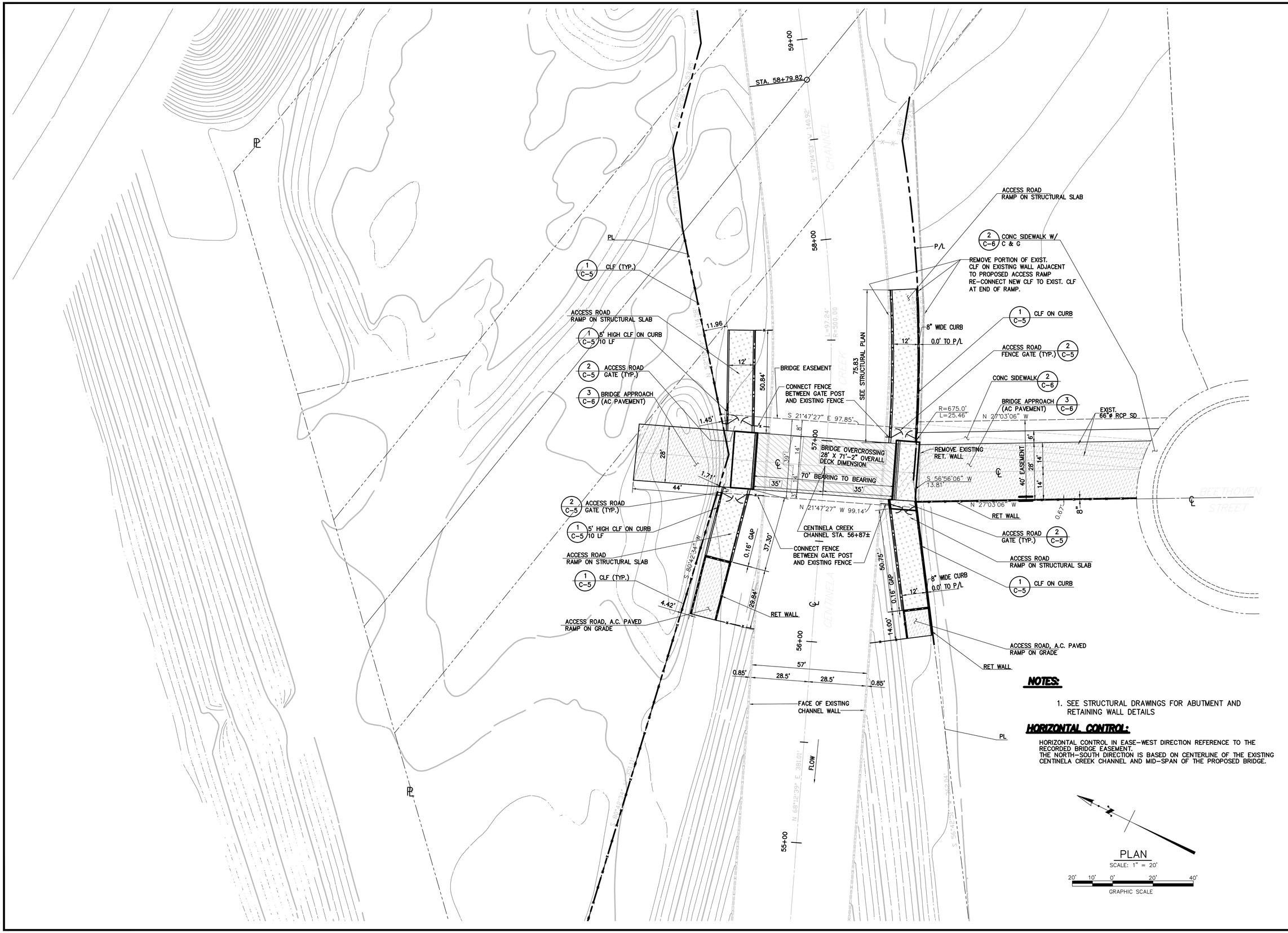

NOTES:

1. SEE STRUCTURAL DRAWINGS FOR ABUTMENT AND RETAINING WALL DETAILS

HORIZONTAL CONTROL:

HORIZONTAL CONTROL IN EASE-WEST DIRECTION REFERENCE TO THE RECORDED BRIDGE EASEMENT.
THE NORTH-SOUTH DIRECTION IS BASED ON CENTERLINE OF THE EXISTING CENTINELA CREEK CHANNEL AND MID-SPAN OF THE PROPOSED BRIDGE.

Revision No.	Date
1 SEPT. 23, 2015	SEPTEMBER 15, 2017

kpff
6080 Center Dr., Suite 700
Los Angeles, CA 90045
P:310.665.0001
F:310.665.9075
www.kpff.com

MARINA ISLAND BRIDGE

5300 BEETHOVEN STREET
Los Angeles, California

SITE PLAN

REGISTERED PROFESSIONAL ENGINEER RICHARD HAYDAY DAVIS No. C 49083 Exp. 3/31/18 CIVIL STATE OF CALIFORNIA

Job No. 971309/115417

C-2

NOTES:						
JOB #	JOB NAME	FILE PATH & NAME	PLOTTED DATE & TIME	UPDATED BY	PLOT SCALE	PROG.MG.	DRAFTER
971309	971309	971309C2.DWG.DWG	NOV. 05, 1998 5:03:57 PM	FK	1=1	IC	FK
XREFS:	TOPO, CIVIL, 971309TB,						

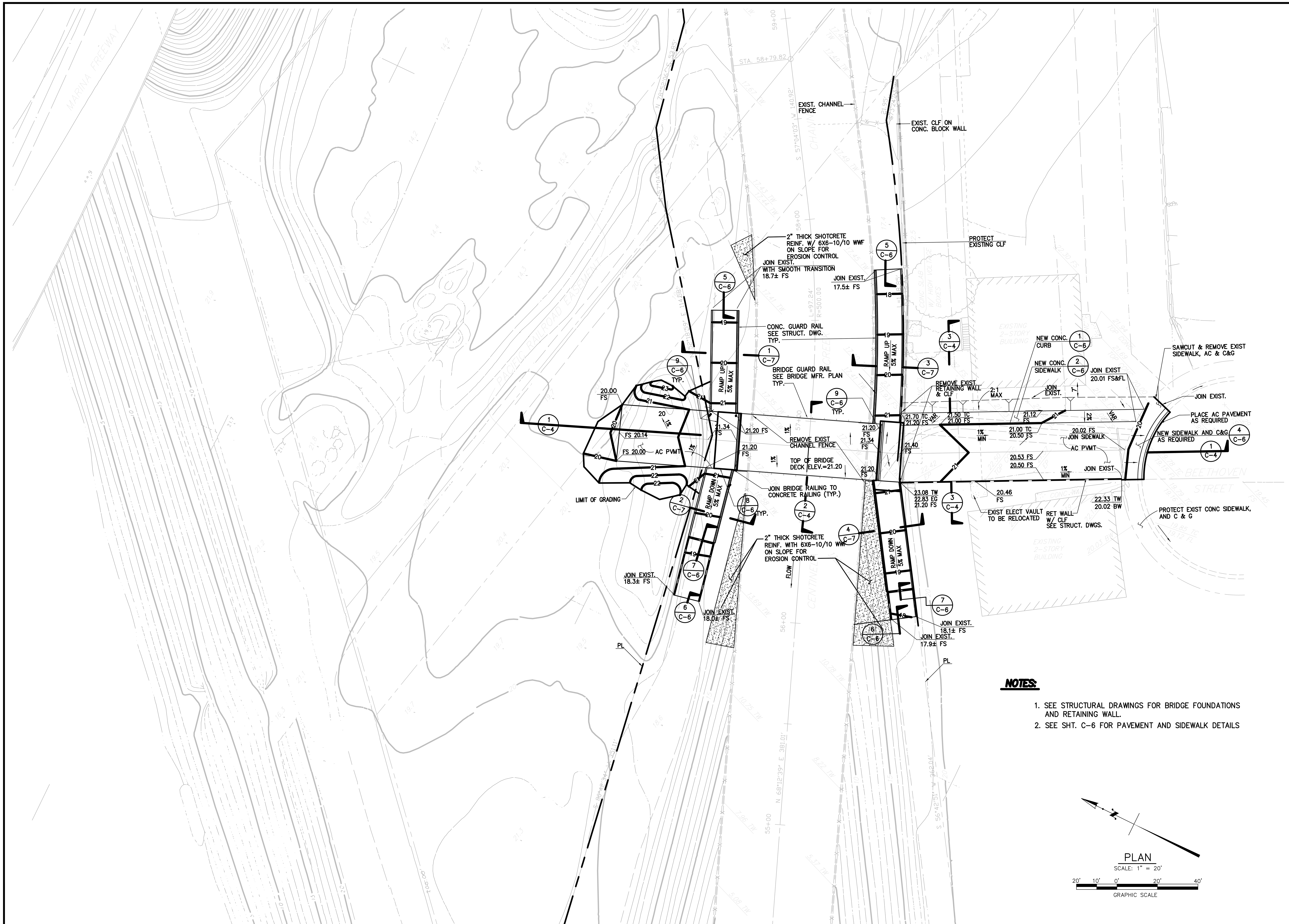

NOTES:

1. SEE STRUCTURAL DRAWINGS FOR BRIDGE FOUNDATIONS AND RETAINING WALL.
2. SEE SHT. C-6 FOR PAVEMENT AND SIDEWALK DETAILS

NOTES:	JOB #	JOB NAME	FILE PATH & NAME	PLOTTED DATE & TIME	UPDATED BY	PLOT SCALE	PROJ.MG.	DRAFTER
	971309	MARINA ISLAND BRIDGE	971309C3.DWG.DWG	NOV. 05, 1998 5:06:15 PM	FK/JC	1=1	RD/JC	FK
XREFS: CIVIL, TOPO, 971309TB,								

Date SEPTEMBER 15, 2017

kpff
6080 Center Dr., Suite 700
Los Angeles, CA 90045
O: 310.665.2800
F: 310.665.9075
www.kpff.com

Revision No.
1 SEPT. 23, 2015

MARINA ISLAND BRIDGE
5300 BEETHOVEN STREET
Los Angeles, California

GRADING & PAVING PLAN

REGISTERED PROFESSIONAL ENGINEER RICHARD HAYT DAVIS No. C46082 Exp. 3/31/18 CIVIL STATE OF CALIFORNIA

Job No. 971309/115417

C-3

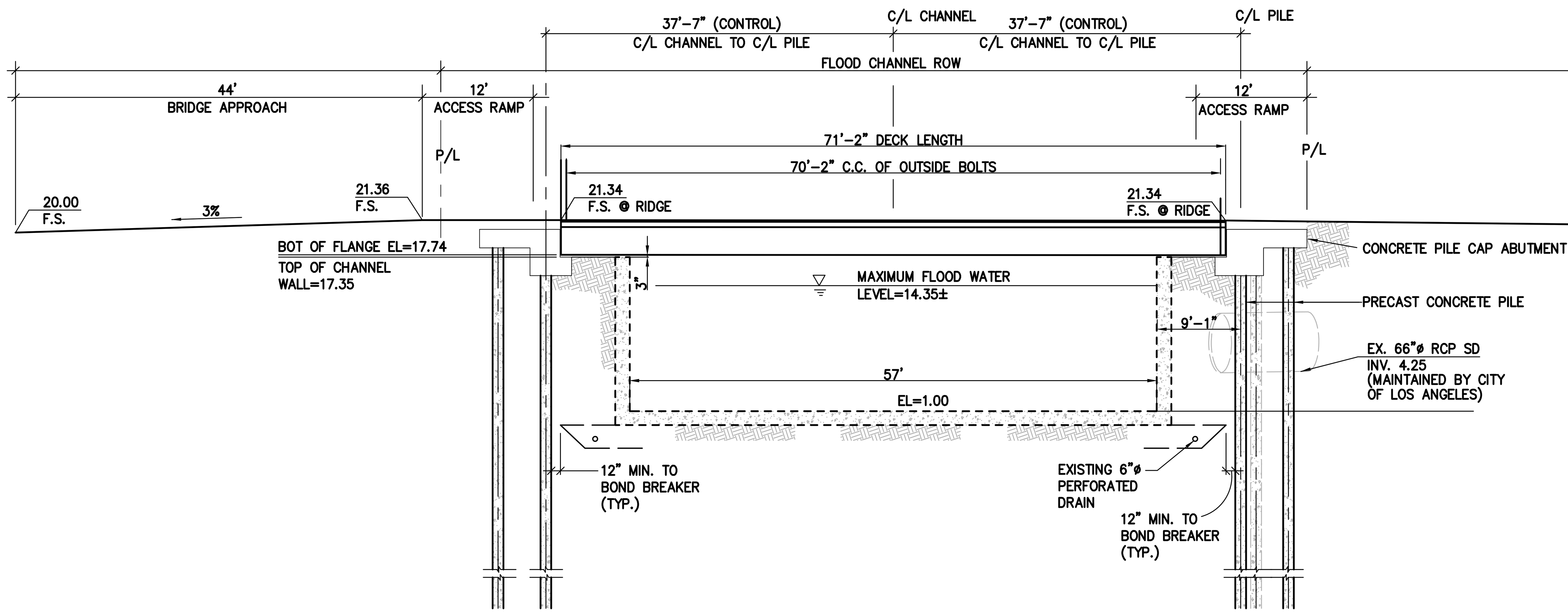

1 C-4 LONGITUDINAL SECTION THRU BRIDGE

SCALE: 1" = 10'-0"

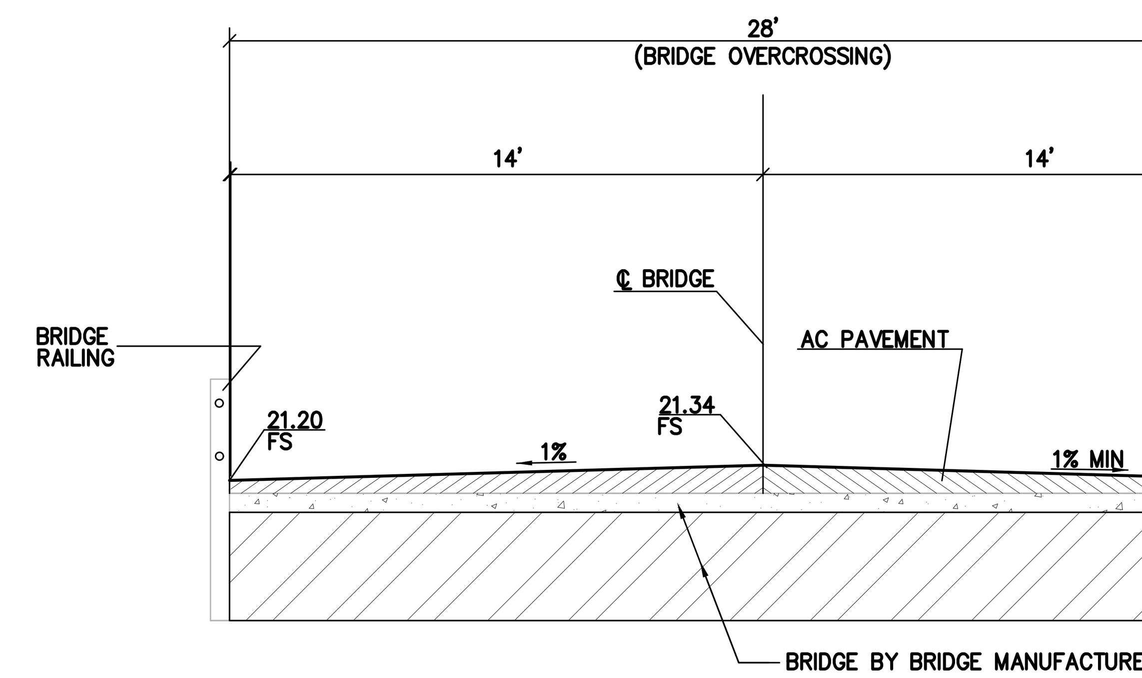

TYPICAL BRIDGE SECTION

N.T.S

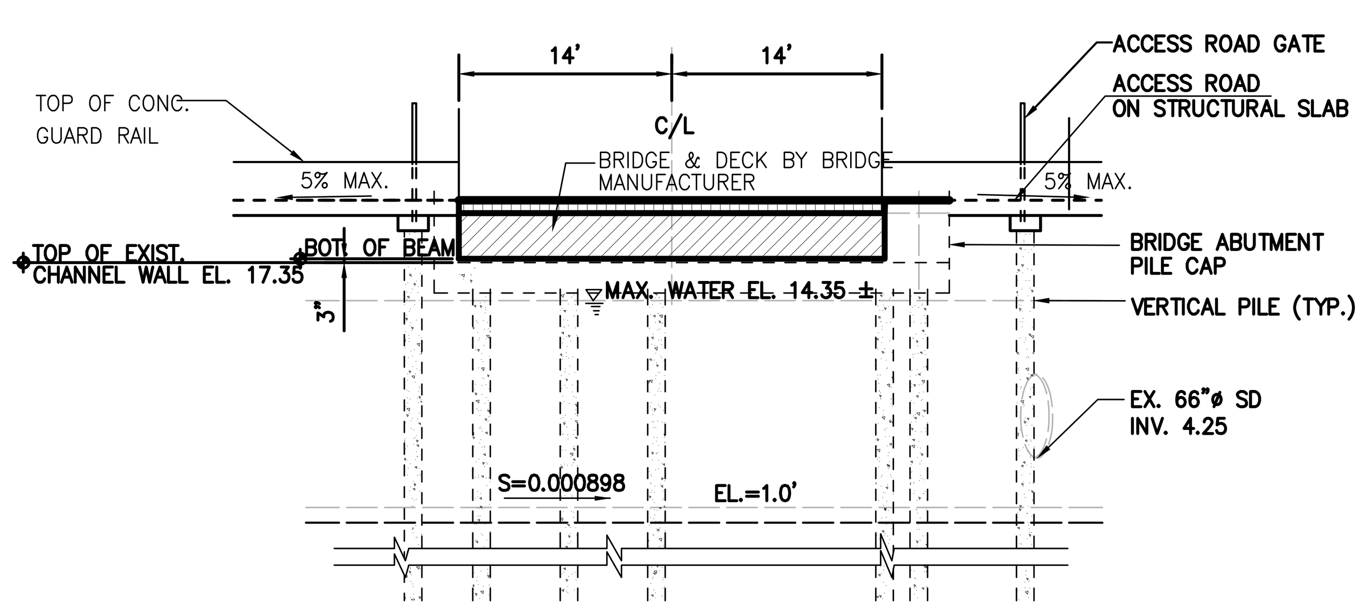

2 C-4 CROSS SECTION THRU BRIDGE

SCALE: 1" = 10'-0"

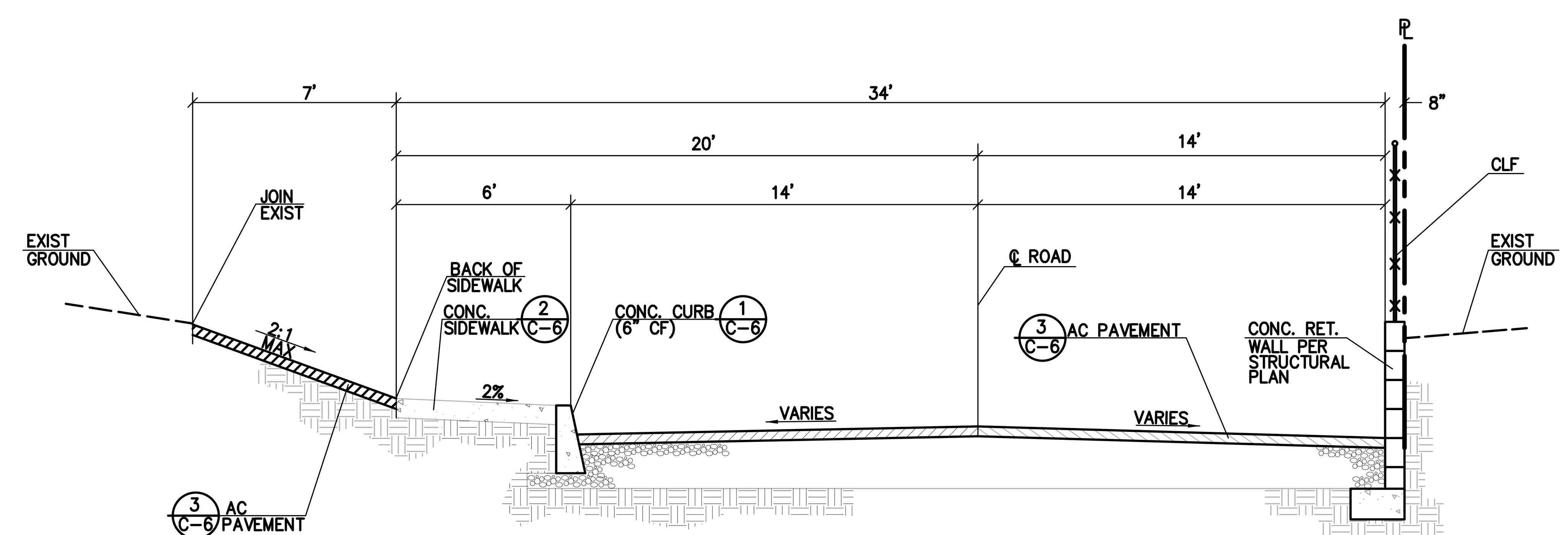

3 C-4 TYPICAL ROAD SECTION

NTS

Date SEPTEMBER 15, 2017

kpff

6080 Center Dr., Suite 700
Los Angeles, CA 90045
O: 310.665.2800
F: 310.665.9075
www.kpff.com

Revision No.

1 SEPT. 23, 2015

MARINA ISLAND BRIDGE

5300 BEETHOVEN STREET
Los Angeles, California

SECTIONS

REGISTERED PROFESSIONAL ENGINEER
RICHARD HAYS DAVIS
No. C 48082
Exp. 3/31/18
CIVIL
STATE OF CALIFORNIA

Job No. 971309/115417

C-4

NOTES:	JOB #	JOB NAME	FILE PATH & NAME	PLOTTED DATE & TIME	UPDATED BY	PLOT SCALE	PROG.MG.	DRAFTER
XREFS: 971309TB.	971309	MARINA ISLAND BRIDGE	971309C4.DWG.DWG	NOV. 05, 1998 5:12:37 PM	FK/JC	1=1	RD/JC	FK

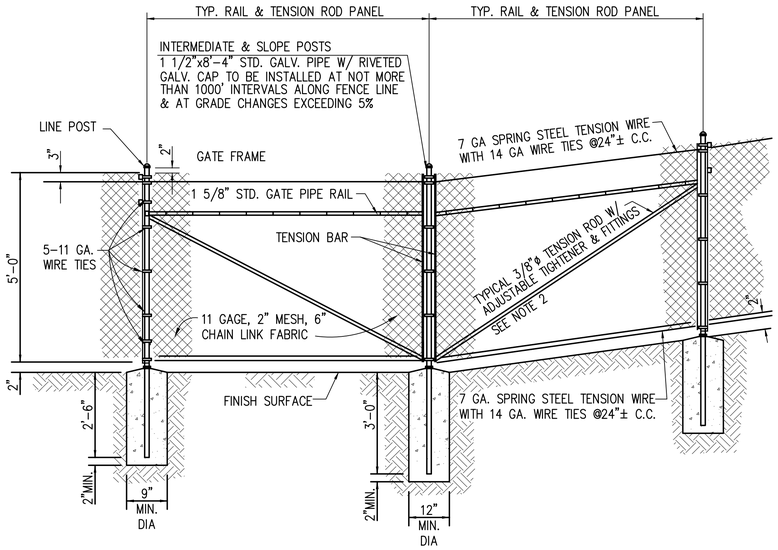

1 / C-5 *INTERMEDIATE POST DETAIL*
NOT TO SCALE

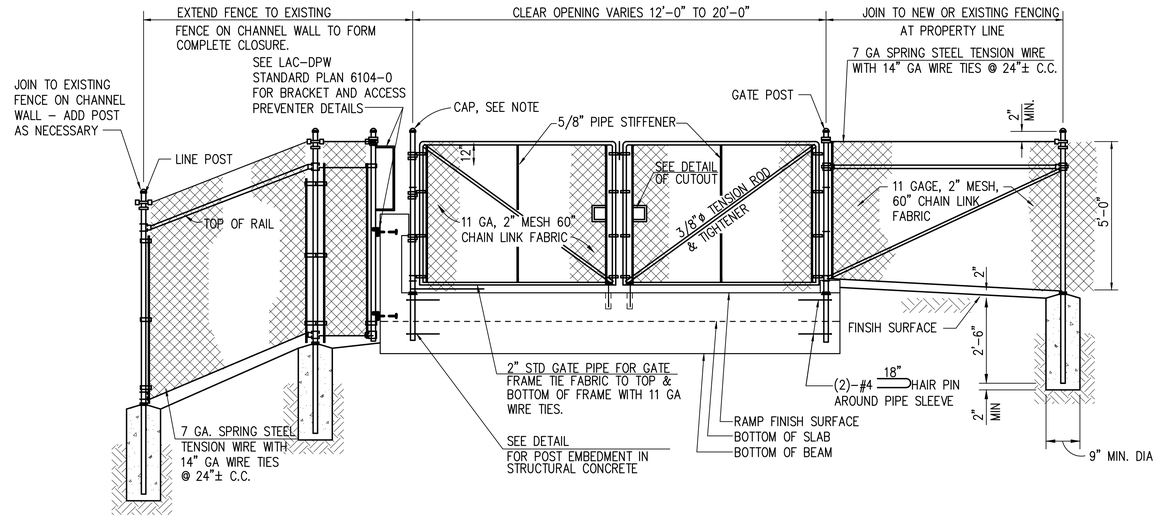

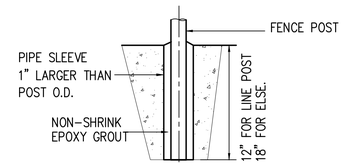

DETAIL OF POST EMBEDMENT IN STRUCTURAL CONCRETE
NOT TO SCALE

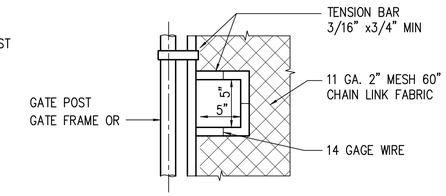

DETAIL OF CUTOUT (FOR CHAIN AND LOCK)
NOT TO SCALE

2 / C-5 *DOUBLE DRIVE GATE DETAIL*
NOT TO SCALE

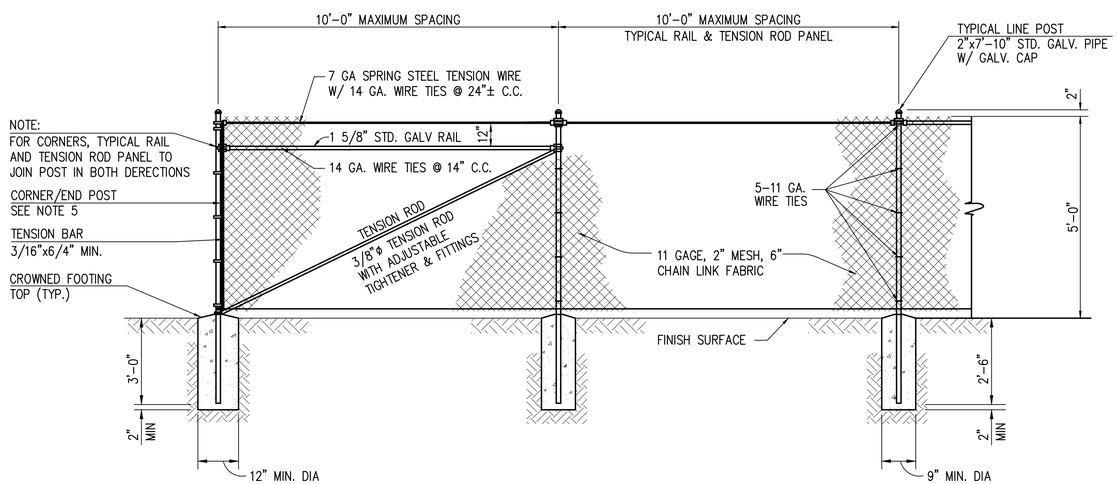

TYPICAL FENCE ELEVATION
NOT TO SCALE

NOTES

1. ALL CHAIN LINK FENCE MATERIAL AND FITTINGS SHALL CONFORM TO STANDARD SPECIFICATIONS FOR PUBLIC WORKS CONSTRUCTION "SECTION 206-6 AND 206-7 UNLESS OTHERWISE SPECIFIED.
   CONSTRUCT ALL FENCE AND GATES PER STANDARD PLANS FOR PUBLIC WORKS CONSTRUCTION (STANDARD PLAN 600-0).
2. ADJUSTABLE TIGHTENERS SHALL BE TURNBUCKLE OR EQUIVALENT, HAVING 6-INCH MIN. TAKE UP.
3. ALL GATE HINGES SHALL BE HEAVY DUTY, MALLEABLE IRON OR STEEL, INDUSTRIAL SERVICE TYPE 270 DEGREE SWING OF APPROVED QUALITY AND DESIGN.
4. GATE POSTS SHALL BE 3"x 8'-4" PIPE FOR 12'-0" OPENING AND 4"x8'-4" PIPE FOR OPENINGS GREATER THAN 12'-0".
5. CORNER OR END POSTS SHALL BE 3 x 8'-4" PIPE. CHANGES IN LINE WHERE THE ANGLE OF DEFLECTION IS 30 DEGREES OR MORE SHALL BE CONSIDERED A CORNER.
6. SECURE GALV. CAP TO POST WITH 1/4" ROUND HEAD RIVERT.
7. CONCRETE SHALL BE CLASS 420-C-2000.
8. THE FABRIC SHALL BE PLACED ON THE OUTWARD FACING SIDE OF POSTS, STRETCHED OUT, AND SECURELY FASTENED.
9. GATES SHALL BE PROVIDED WITH A COMBINATION SPRING LATCH AND PLUNGER ROD OF APPROVED DESIGN.
10. DIMENSIONS SHOWN FOR STANDARD GALVANIZED PIPE AND POSTS ARE NOMINAL OUTSIDE DIAMETERS.

kpff
6080 Center Dr., Suite 700
Los Angeles, CA 90045
O:310.665.0001
F:310.665.9075
www.kpff.com

Revision No.	Date
1 SEPT. 23, 2015	SEPTEMBER 15, 2017

MARINA ISLAND BRIDGE

5300 BEETHOVEN STREET
Los Angeles, California

DETAILS

REGISTERED PROFESSIONAL ENGINEER RICHARD HAYDN DAVIS No. C48083 Exp. 3/31/18 CIVIL STATE OF CALIFORNIA

Job No. 971309/115417

C-5

JOB #	JOB NAME	FILE PATH & NAME	PLOTTED DATE & TIME	UPDATED BY	PLOT SCALE	PROG.MG.	DRAFTER
971309	MARINA ISLAND BRIDGE	971309C5.DWG.DWG	NOV. 06, 1998 8:52:58 AM	YWF	1=1	RD/JC	FK

NOTES:
XREFS: 971309TB,

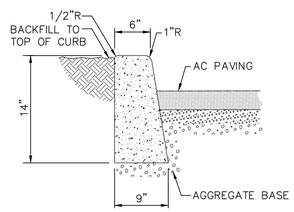

NOTES:

1. CONCRETE SHALL BE 2500 PSI.
2. ISOLATION JOINTS SHALL BE PLACED ONLY AS SPECIFIED
3. CONTRACTION JOINTS CONSISTING OF 1" DEEP SCORES SHALL BE PLACED AT 15' INTERVALS O.C.
4. WHERE A WALK TS ADJACENT TO THE CURB THE JOINTS SHALL ALIGN WITH JOINTS IN THE WALK.

1 / C-6 STANDARD CONCRETE CURB

NTS

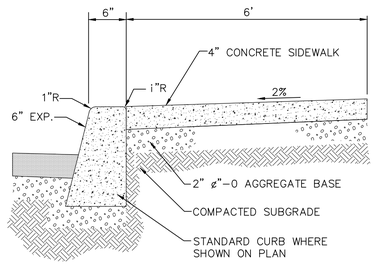

NOTE:

1. CONCRETE SHALL BE 3000 PSI, SLUMP RANGE 3" TO 5".

2 / C-6 CONCRETE SIDEWALK

NTS

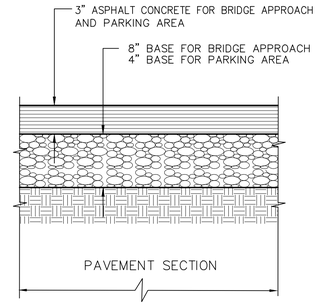

NOTES

1. ASPHALT CONCRETE MIX SHALL BE PER THE SPECIFICATIONS FOR ASHPALT CONCRETE.

3 / C-6 TYPICAL AC PAVEMENT

NTS

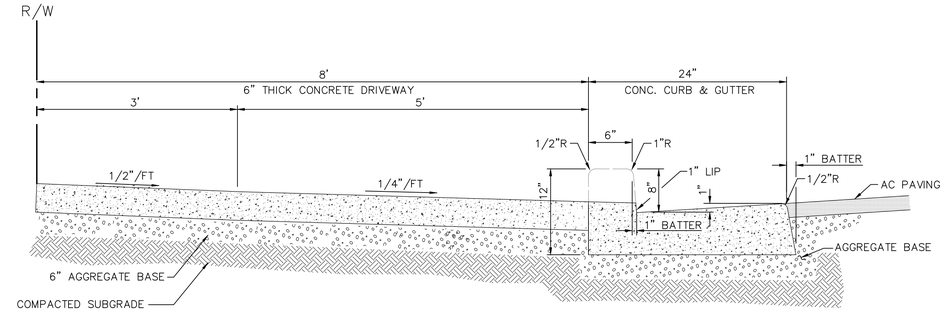

NOTES:

1. CONCRETE SHALL BE 2500 PSI.
2. ISOLATION JOINTS SHALL BE PLACED ONLY AS SPECIFIED
3. CONTRACTION JOINTS CONSISTING OF 1" DEEP SCORES SHALL BE PLACED AT 15' INTERVALS O.C.
4. WHERE A WALK TS ADJACENT TO THE CURB THE JOINTS SHALL ALIGN WITH JOINTS IN THE WALK.

4 / C-6 STANDARD CONCRETE DRIVEWAY, CURB & GUTTER

NTS

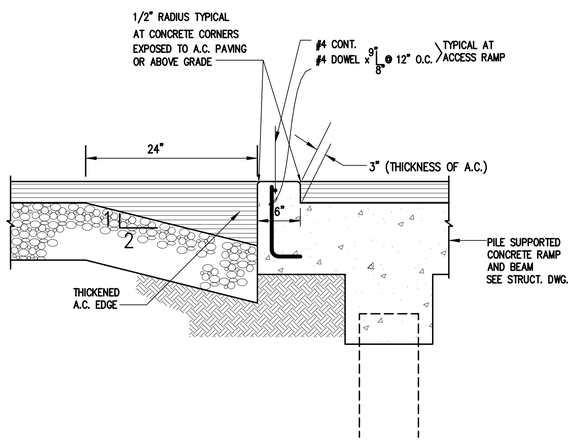

5 / C-6 A.C. TO CONC. RAMP DETAIL

NTS

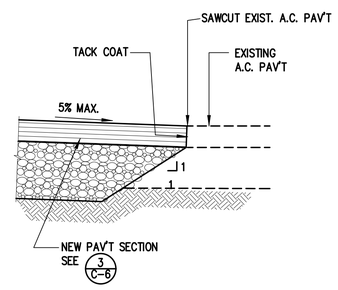

6 / C-6 NEW & EXISTING JOIN DETAIL

NTS

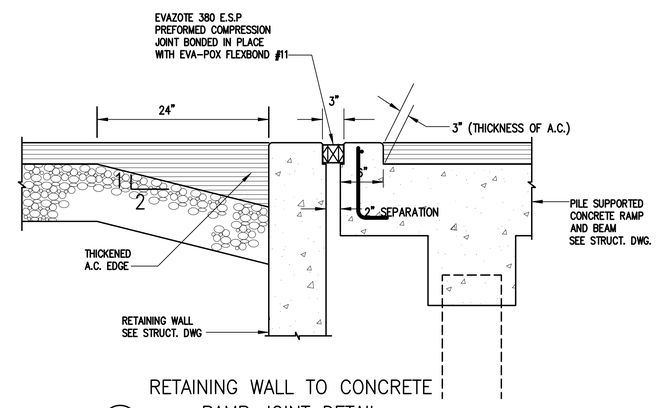

7 / C-6 RETAINING WALL TO CONCRETE RAMP JOINT DETAIL

NTS

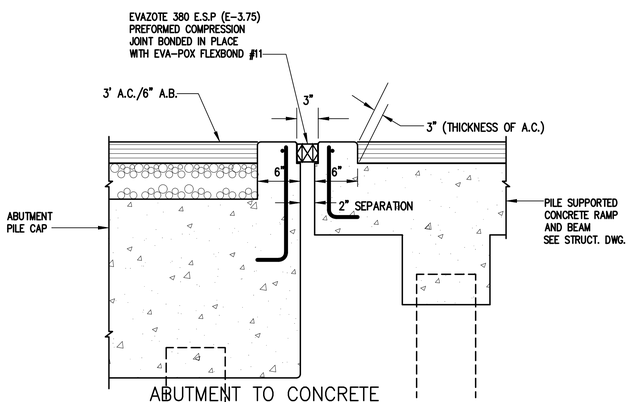

8 / C-6 ABUTMENT TO CONCRETE RAMP' JOINT DETAIL

NTS

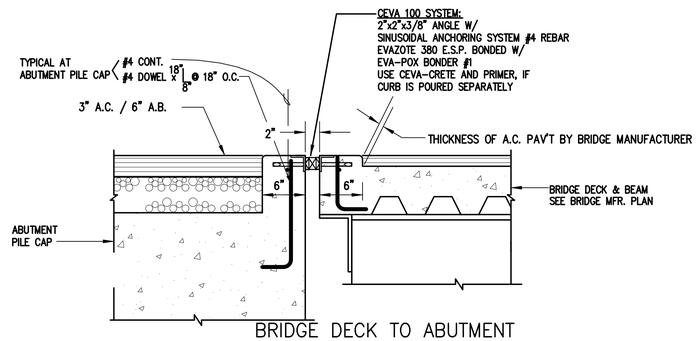

9 / C-6 BRIDGE DECK TO ABUTMENT JOINT DETAIL

NTS

NOTES:							
JOB #	JOB NAME	FILE PATH & NAME	PLOTTED DATE & TIME	UPDATED BY	PLOT SCALE	PROG.MG.	DRAFTER
971309	MARINA ISLAND BRIDGE	971309C6.DWG.DWG	NOV. 06, 1998 8:58:52 AM	FK/JC	1=1	RD/JC	FK
XREFS: 971309TB,							

kpff
6080 Center Dr., Suite 700
Los Angeles, CA 90045
P:310.665.0901
F:310.665.9075
www.kpff.com

Revision No.	Date
1 SEPT. 23, 2015	SEPTEMBER 15, 2017

MARINA ISLAND BRIDGE

5300 BEETHOVEN STREET
Los Angeles, California

DETAILS

REGISTERED PROFESSIONAL ENGINEER RICHARD HAYES DAVIS No. C48087 Exp. 3/31/18 CIVIL STATE OF CALIFORNIA

Job No. 971309/115417

C-6

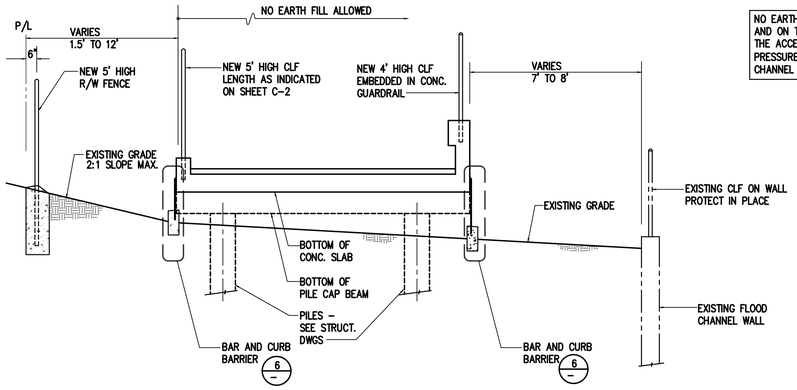

NO EARTH FILL ALLOWED UNDER AND ON THE CHANNEL SIDE OF THE ACCESS RAMP TO AVOID PRESSURE SURCHARGE ON EXISTING CHANNEL WALLS.

SEE SHEET C-6 FOR CHAIN LINK FENCE (CLF) DETAILS.

1 TYPICAL SECTION AT RAMP #1
SCALE: 1" = 4'

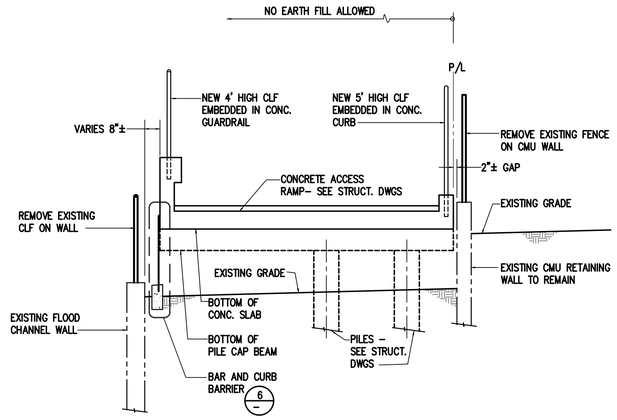

3 TYPICAL SECTION AT RAMP #3
SCALE: 1" = 4'

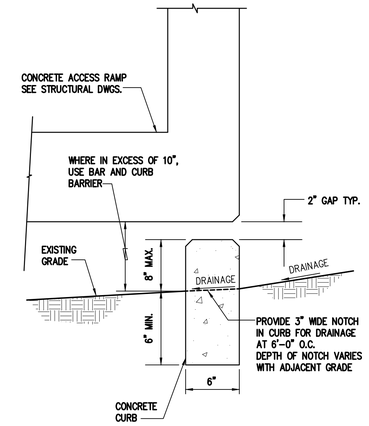

5 CURB BARRIER DETAIL
SCALE: 1" = 8"

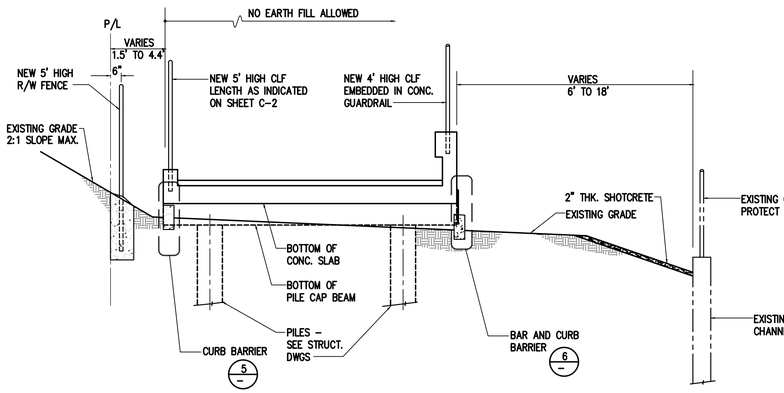

2 TYPICAL SECTION AT RAMP #2
SCALE: 1" = 4'

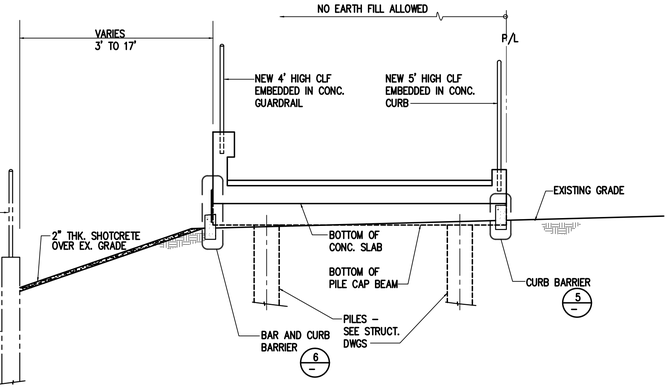

4 TYPICAL SECTION AT RAMP #4
SCALE: 1" = 4'

NOTE:
BAR AND CURB BARRIER PER REQUIREMENT OF LOS ANGELES FLOOD MAINTENANCE

STEEL BAR BARRIER ASSEMBLY SHALL BE SHOP PRIMED AND PAINTED WITH TWO COATS OF EPOXY PAINT FOR CORROSION PROTECTION

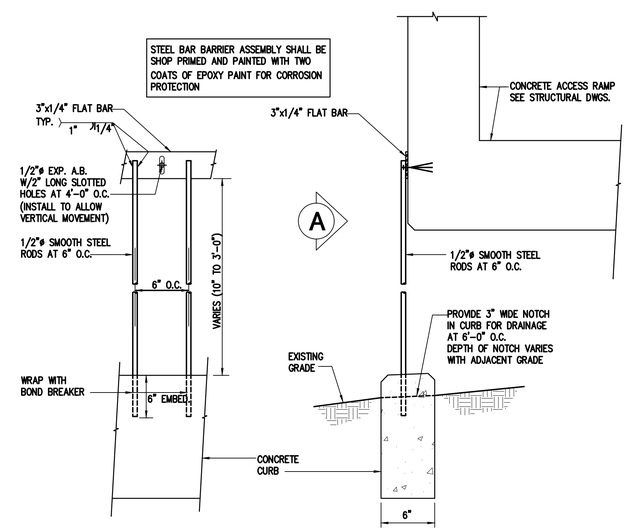

6 BAR AND CURB BARRIER DETAIL
SCALE: 1" = 8"

Revision No.	Date
1	SEPT. 23, 2015

SEPTEMBER 15, 2017

kpff
6080 Center Dr., Suite 700
Los Angeles, CA 90045
P: 310.665.2001
F: 310.665.9075
www.kpff.com

MARINA ISLAND BRIDGE
5300 BEETHOVEN STREET
Los Angeles, California

RAMP SECTIONS AND DETAILS

REGISTERED PROFESSIONAL ENGINEER
RICHARD HAYDN DAVIS
No. C48085
Exp. 3/31/18
CIVIL
STATE OF CALIFORNIA

Job No.
971309/115417

C-7

STRUCTURAL NOTES

CONCRETE

1. ALL CONCRETE CONSTRUCTION SHALL CONFORM WITH CHAPTER 19 OF THE CODE AND WITH THE PROVISIONS OF ACI 318, LATEST EDITION.
2. REINFORCED CONCRETE IS DESIGNED BY THE "ULTIMATE STRENGTH DESIGN METHOD". EXISTING CHANNEL WALLS ARE CHECKED USING WORKING STRESS DESIGN METHODS AS OUT LINED
3. CONCRETE MIXES SHALL BE DESIGNED BY THE APPROVED TESTING LABORATORY AND APPROVED BY THE STRUCTURAL ENGINEER. THE COMPRESSIVE STRENGTH OF THE CONCRETE SHALL BE PROPORTIONED BASED ON CHAPTER 5 OF ACI.
4. SCHEDULE OF STRUCTURAL CONCRETE 28-DAY STRENGTH AND TYPES:

LOCATION IN STRUCTURE	STRENGTH (PSI)	DENSITY (PCF)	SLUMP (INS)
PRECAST PRESTRESSED CONCRETE PILES	6000	150	4
ALL OTHER CONCRETE	4000	150	4

5. PORTLAND CEMENT SHALL CONFORM TO ASTM C-150, TYPE II.
6. AGGREGATE FOR HARDROCK CONCRETE SHALL CONFORM TO ALL REQUIREMENTS AND TESTS OF ASTM C-33 AND PROJECT SPECIFICATIONS. EXCEPTIONS MAY BE USED ONLY WITH PERMISSION OF THE STRUCTURAL ENGINEER.
7. CONCRETE MIXING OPERATION, ETC. SHALL CONFORM TO ASTM C-94.
8. PLACEMENT OF CONCRETE SHALL CONFORM TO CODE SECTION 1905 AND PROJECT SPECIFICATIONS. CLEAN AND ROUGHEN TO 1/4" AMPLITUDE ALL CONCRETE SURFACES AGAINST WHICH NEW CONCRETE IS TO BE PLACED.
9. ALL REINFORCING BARS, ANCHOR BOLTS AND OTHER CONCRETE INSERTS SHALL BE WELL SECURED IN POSITION PRIOR TO PLACING CONCRETE.
10. PROVIDE SLEEVES FOR PLUMBING AND ELECTRICAL OPENINGS IN CONCRETE BEFORE PLACING. DO NOT CUT ANY REINFORCING WHICH MAY CONFLICT. CORING IN CONCRETE IS NOT PERMITTED. NOTIFY THE STRUCTURAL ENGINEER IN ADVANCE OF CONDITIONS NOT SHOWN ON THE DRAWINGS. SEE THESE DRAWINGS FOR ADDITIONAL RESTRICTIONS ON THE PLACEMENT OF OPENINGS IN SLABS AND WALLS.
11. PIPES LARGER THAN 1-1/2" DIAMETER SHALL NOT BE EMBEDDED IN STRUCTURAL CONCRETE EXCEPT WHERE SPECIFICALLY APPROVED BY STRUCTURAL ENGINEER. PIPES SHALL NOT DISPLACE OR INTERRUPT REINFORCING BARS, SPACE EMBEDDED PIPES AND SLEEVES AT A MINIMUM OF 3 DIAMETERS.

REINFORCING STEEL (FOR CONCRETE AND MASONRY)

1. REINFORCING BARS SHALL CONFORM TO THE REQUIREMENTS OF CHAPTER 19 OF THE CODE, ASTM A615, GRADE 60 UNO. DEFORMATIONS SHALL BE IN ACCORDANCE WITH ASTM A-305.
2. BARS SHALL BE CLEAN OF RUST, GREASE, OR OTHER MATERIALS LIKELY TO IMPAIR BOND. ALL REINFORCING BAR BENDS SHALL BE MADE COLD.
3. WELDED WIRE FABRIC SHALL CONFORM TO ASTM A-185. PROVIDE LAPS AS PER ACI CHAPTER 12 SECTION 19, 9" MINIMUM. WWF SHALL BE SUPPORTED ON APPROVED CHAIRS.
4. REINFORCING BAR SPLICES SHALL BE MADE AS INDICATED ON THE DRAWINGS. MINIMUM SPLICE LENGTH FOR REINFORCING STEEL BARS IN CONCRETE SHALL BE AS PER THE CODE SECTION 1912. LAP ALL HORIZONTAL BARS AT CORNERS AND INTERSECTIONS. STAGGER ALL SPLICES UNLESS NOTED OTHERWISE ON PLANS.
5. ALL BARS SHALL BE MARKED SO THEIR IDENTIFICATION CAN BE MADE WHEN THE FINAL IN-PLACE INSPECTION IS MADE.
6. WHERE WELDING OF REINFORCING IS APPROVED BY THE STRUCTURAL ENGINEER, IT SHALL BE DONE BY AWS CERTIFIED WELDERS USING E90XX OR APPROVED ELECTRODES. WELDING PROCEDURES SHALL CONFORM TO THE REQUIREMENTS OF STRUCTURAL WELDING CODE- REINFORCING STEEL", AWS-D1.4, LATEST REVISION. REINFORCING BARS TO BE WELDED SHALL CONFORM TO THE REQUIREMENTS OF ASTM A-706.
7. BARS IN SLABS SHALL BE SECURELY SUPPORTED ON WELL-CURED CONCRETE BLOCKS OR APPROVED METAL CHAIRS, PRIOR TO PLACING CONCRETE.
8. REINFORCING STEEL SHALL BE DETAILED IN ACCORDANCE WITH THE "A.C.I. MANUAL OF STANDARD PRACTICE FOR DETAILING REINFORCED CONCRETE STRUCTURES", LATEST EDITION.
9. COMPLETE AND DETAILED REINFORCING PLACEMENT DRAWINGS SHALL BE PREPARED AND SUBMITTED TO THE ENGINEER FOR APPROVAL BY THE STRUCTURAL ENGINEER PRIOR TO FABRICATION IN ACCORDANCE WITH THE SPECIFICATIONS AND APPLICABLE CODES. THESE DRAWINGS SHALL BE AVAILABLE ON THE JOB SITE PRIOR TO PLACING OF CONCRETE.
10. MILL TEST REPORTS FOR GRADE 60 BARS SHALL BE SUBMITTED PRIOR TO PLACEMENT OF CONCRETE.
11. CONTINUOUS INSPECTION OF CONCRETE SHALL INCLUDE INSPECTION DURING INSTALLATION OF REINFORCING STEEL. INSPECTION SHALL BE SCHEDULED SO THAT PLACEMENT OF REINFORCING STEEL, CONDUIT, SLEEVES, AND EMBEDDED ITEMS MAY BE CORRECTED PRIOR TO PLACEMENT OF OVERLYING GRIDS OR REINFORCING STEEL.
12. ALL GRADE 60 REINFORCING STEEL SHALL BE CLEARLY MARKED TO DIFFERENTIATE THEM FROM GRADE 40 REINFORCING STEEL IF CONCURRENTLY ON SITE.
13. CONCRETE PROTECTION FOR REINFORCEMENT

(i) CAST-IN-PLACE CONCRETE (NON-PRESTRESSED). THE FOLLOWING MINIMUM CONCRETE COVER SHALL BE PROVIDED FOR REINFORCEMENT:

	MINIMUM COVER, IN.
A. CONCRETE CAST AGAINST AND PERMANENTLY EXPOSED TO EARTH	3
B. CONCRETE EXPOSED TO EARTH OR WEATHER:	2

(ii) PRECAST CONCRETE (MANUFACTURED UNDER PLANT CONTROL CONDITIONS). THE FOLLOWING MINIMUM CONCRETE SHALL BE PROVIDED FOR REINFORCEMENT:

A. CONCRETE EXPOSED TO EARTH OR WEATHER:

NO. 4 THROUGH NO. 11 BAR	2

FOUNDATION

1. FOUNDATION DESIGN BASED ON SOILS REPORT BY BYER GEOTECHNICAL INC. REPORT NO. BG22586, DATED APRIL 25, 2017.
2. FOOTINGS ARE DESIGNED BASED ON THE FOLLOWING INFORMATION:

ALLOWABLE BEARING*	=	2000	PSF
EQUIVALENT FLUID PRESSURE	=	30	PCF: UNRESTRAINED WALLS
	=	TRAPEZOIDAL DIST	PCF: RESTRAINED WALLS
PASSIVE EARTH PRESSURE	=	250	PCF
COEFFICIENT OF FRICTION	=	0.4	

* ALLOWABLE BEARING MAY BE INCREASED BY 1/3 FOR WIND AND SEISMIC LOAD CASES.

FOOTINGS SHALL BEAR ON FIRM NATURAL SOILS. MINIMUM DEPTH OF FOOTINGS BELOW LOWEST ADJACENT FINAL GRADE SHALL BE 2'-0".

3. CONTRACTOR SHALL PROVIDE FOR DESIGN AND INSTALLATION OF ALL CRIBBING, SHEATHING AND SHORING REQUIRED AND SHALL BE SOLELY RESPONSIBLE FOR ALL EXCAVATION PROCEDURES INCLUDING LAGGING, SHORING AND PROTECTION OF ADJACENT PROPERTY, STRUCTURES, STREETS AND UTILITIES IN ACCORDANCE WITH ALL NATIONAL, STATE AND LOCAL SAFETY ORDINANCES.
4. EXCAVATION FOR FOOTINGS SHALL BE APPROVED BY THE INSPECTOR OR SOILS ENGINEER PRIOR TO PLACING THE CONCRETE AND REINFORCING. CONTRACTOR TO NOTIFY THE INSPECTOR WHEN INSPECTION OF EXCAVATION IS READY. INSPECTOR TO SUBMIT LETTER OF COMPLIANCE.
5. ALL EXCAVATIONS SHALL BE PROPERLY BACKFILLED. DO NOT PLACE BACKFILL BEHIND RETAINING WALLS BEFORE CONCRETE OR GROUT HAS ATTAINED FULL DESIGN STRENGTH. CONTRACTORS SHALL BRACE OR PROTECT ALL BUILDING AND PIT WALLS BELOW GRADE FROM LATERAL LOADS UNTIL ATTACHING FLOORS ARE COMPLETELY IN PLACE AND HAVE ATTAINED FULL STRENGTH. CONTRACTOR SHALL PROVIDE FOR DESIGN, PERMITS AND INSTALLATION OF SUCH BRACING.
6. FOUNDATIONS SHALL BE PLACED AND ESTIMATED ACCORDING TO DEPTHS SHOWN ON DRAWINGS. SHOULD SOIL ENCOUNTERED AT THESE DEPTHS NOT BE APPROVED BY THE INSPECTOR OR SOILS ENGINEER, FOUNDATION ELEVATIONS WILL BE ALTERED BY CHANGE ORDER.
7. FOOTING BACKFILL AND UTILITY TRENCH BACKFILL WITHIN BUILDING AREA SHALL BE MECHANICALLY COMPACTED IN LAYERS IN ACCORDANCE WITH THE SOILS REPORT AND APPROVED BY THE SOILS ENGINEER. FLOODING WILL NOT BE PERMITTED. ALL FILLS USED TO SUPPORT FOUNDATIONS SHALL BE INSPECTED BY THE SOILS ENGINEER REPRESENTATIVE.
8. ALL ABANDONED FOOTINGS, UTILITIES, ETC. SHALL BE REMOVED UNLESS NOTED OTHERWISE. NEW FOOTINGS MUST EXTEND INTO UNDISTURBED SOILS.
9. SLABS ON GRADE SHALL BE SUPPORTED ON NATURAL GRADE OR COMPACTED FILL AS PER THE RECOMMENDATIONS OF THE SOILS REPORT.
10. PILE FOUNDATIONS ARE DESIGNED BASED ON THE CAPACITIES LISTED IN THE GEOTECHNICAL REPORT.

* 1/3 INCREASE ALLOWED FOR WIND OR SEISMIC LOADING.

PRECAUTIONS SHOULD BE TAKEN DURING THE INSTALLATION OF PILES TO MINIMIZE THE POSSIBILITY OF CAVING. CLOSELY SPACED PILES SHOULD BE DRILLED AND FILLED ALTERNATELY, ALLOWING THE CONCRETE TO SET AT LEAST EIGHT HOURS BEFORE DRILLING AN ADJACENT HOLE. PILE EXCAVATIONS SHOULD BE FILLED WITH CONCRETE AS SOON AFTER DRILLING AND INSPECTION AS POSSIBLE; THE HOLES SHOULD NOT BE LEFT OPEN OVERNIGHT.

DIFFICULTIES DUE TO WATER MAY BE REDUCED IF THE PILES ARE POURED IMMEDIATELY AFTER INSPECTION. ANY WATER SHOULD BE PUMPED FROM THE EXCAVATIONS AND THE CONCRETE PLACED IN THE DRY.

PILE DRIVING LENGTHS AND DRIVING RESISTANCE SHALL BE RECORDED AND THE RECORD MAINTAINED FOR REFERENCE. BOND BREAKER DETAIL SHALL BE UTILIZED FOR PILE LENGTH FROM EXISTING FINISH GRADE TO BOTTOM OF EXISTING STORM WATER CHANNEL.

BRIDGE CONNECTIONS

1. BRIDGE TO BE SUPPLIED BY EXCEL BRIDGES.
2. THE NORTH ABUTMENT IS DESIGNED TO RESIST 100% OF THE BRIDGE NORTH-SOUTH SEISMIC LOADS AND 50% OF THE BRIDGE EAST-WEST SEISMIC LOADS.
3. THE SOUTH ABUTMENT IS DESIGNED TO RESIST 50% OF THE BRIDGE EAST-WEST SEISMIC LOADS. SLIP CONNECTIONS ALLOWING MOVEMENT IN THE NORTH-SOUTH DIRECTION SHALL BE PROVIDED AT THE SOUTH ABUTMENT.

GENERAL

1. THE CONTRACTOR SHALL VERIFY ALL DIMENSIONS PRIOR TO STARTING CONSTRUCTION. THE ENGINEER SHALL BE NOTIFIED OF ANY DISCREPANCIES OR INCONSISTENCIES.
2. ALL DRAWINGS ARE CONSIDERED TO BE A PART OF THE CONTRACT DOCUMENTS. THE CONTRACTOR SHALL BE RESPONSIBLE FOR THE REVIEW AND COORDINATION OF ALL DRAWINGS AND SPECIFICATIONS PRIOR TO THE START OF CONSTRUCTION. ANY DISCREPANCIES THAT OCCUR SHALL BE BROUGHT TO THE ATTENTION OF THE ENGINEER PRIOR TO START OF CONSTRUCTION SO THAT A CLARIFICATION CAN BE ISSUED. ANY WORK PERFORMED IN CONFLICT WITH THE CONTRACT DOCUMENTS OR ANY CODE REQUIREMENTS SHALL BE CORRECTED BY THE CONTRACTOR AT THEIR OWN EXPENSE AND AT NO EXPENSE TO THE OWNER OR ENGINEER.
3. NOTES AND DETAILS ON DRAWINGS SHALL TAKE PRECEDENCE OVER GENERAL NOTES AND TYPICAL DETAILS. WHERE NO DETAILS ARE GIVEN, CONSTRUCTION SHALL BE AS SHOWN FOR SIMILAR WORK.
4. ALL WORK SHALL CONFORM TO THE MINIMUM STANDARDS OF THE FOLLOWING CODES:

AASHTO 7TH EDITION BRIDGE STANDARD SPECIFICATIONS REFERRED TO HERE AS "THE CODE", AND ANY OTHER REGULATING AGENCIES WHICH HAVE AUTHORITY OVER ANY PORTION OF THE WORK, INCLUDING THE STATE OF CALIFORNIA DIVISION OF INDUSTRIAL SAFETY, AND THOSE CODES & STANDARDS LISTED IN THESE NOTES AND SPECIFICATIONS.

5. THE CONTRACT STRUCTURAL DRAWINGS AND SPECIFICATIONS REPRESENT THE FINISHED STRUCTURE. THEY DO NOT INDICATE THE METHOD OF CONSTRUCTION. THE CONTRACTOR SHALL PROVIDE ALL MEASURES NECESSARY TO PROTECT THE STRUCTURE DURING CONSTRUCTION. SUCH MEASURES SHALL INCLUDE, BUT NOT BE LIMITED TO, BRACING, SHORING FOR LOADS DUE TO CONSTRUCTION EQUIPMENT, ETC. OBSERVATION VISITS TO THE SITE BY THE STRUCTURAL ENGINEER SHALL NOT INCLUDE INSPECTION OF THE ABOVE ITEMS.
6. OPENINGS, POCKETS, ETC., LARGER THAN 6" SHALL NOT BE PLACED IN CONCRETE SLABS, DECKS, WALLS, UNLESS SPECIALLY DETAILED ON THE STRUCTURAL DRAWINGS. NOTIFY THE STRUCTURAL ENGINEER WHEN DRAWINGS BY OTHERS SHOW OPENINGS, POCKETS, ETC., LARGER THAN 6" NOT SHOWN ON THE STRUCTURAL DRAWINGS, BUT WHICH ARE LOCATED IN STRUCTURAL MEMBERS. FOR ANY FURTHER RESTRICTIONS ON OPENINGS IN STRUCTURAL ELEMENTS, SEE APPLICABLE SECTIONS BELOW.
7. PIPES LARGER THAN 1-1/2" DIAMETER SHALL NOT BE EMBEDDED IN STRUCTURAL CONCRETE EXCEPT WHERE SPECIFICALLY APPROVED.
8. ASTM SPECIFICATIONS ON THE DRAWINGS SHALL BE OF THE LATEST REVISION.
9. CONTRACTOR SHALL INVESTIGATE SITE DURING CLEARING AND EARTHWORK OPERATIONS FOR FILLED EXCAVATIONS OR BURIED STRUCTURES, SUCH AS CESSPOOLS, CISTERNS, FOUNDATIONS, ETC. IF ANY SUCH STRUCTURES ARE FOUND, STRUCTURAL ENGINEER SHALL BE NOTIFIED IMMEDIATELY.
10. PROTECT UTILITY WITHIN THE USACE RIGHT-OF-WAY.
11. PROVISIONS SHALL BE MADE TO PREVENT DEBRIS FROM FALLING INTO THE CHANNEL DURING CONSTRUCTION.

DESIGN LOADS:

1. LIVE LOADS:

DESIGN TRUCK	HS20-44
DESIGN LANE	0.64 KLF

2. SEISMIC LOADS:

S_I = 0.651 PGAM = 0.643
S_S = 1.705 S_{DS} = 1.137
F_a = 1.0 S_{DI} = 0.651
F_V = 1.5
S_{MS} = 1.705
S_{MI} = 0.977
SEISMIC DESIGN CATEGORY = D

3. CONSTRUCTION LOADING:

A. COMPACTION EQUIPMENT USED TO PLACE BACKFILL BEHIND CHANNEL WALL MUST NOT EXCEED 35,000 POUNDS INCLUDING DYNAMIC FORCES FROM VIBRATOR COMPACTOR.

B. NO EQUIPMENT IN EXCESS OF H-10 HIGHWAY LOADING (AASHTO), AND NO STOCKPILING OF MATERIAL WILL BE PERMITTED ALONG THE CHANNEL WITHIN A DISTANCE OF WALL HEIGHT.

C. NO EQUIPMENT IN EXCESS OF H-20 HIGHWAY LOADING WILL BE PERMITTED TO OPERATE ON THE INVERT OF THE CHANNEL. ONLY RUBBER-TIRED, LEGALLY LOADED EQUIPMENT SHALL BE OPERATED ON THE EXPOSED CHANNEL INVERT. IF STEEL CRAWLER TYPE EQUIPMENT IS USED, WOODEN MATTING SHALL BE PROVIDED OVER THE INVERT IN THE OPERATING AREA. LOADS FROM TRACK VEHICLES SHALL NOT EXCEED 300 PSF ON A SURFACE AT THE BOTTOM OF THE INVERT SLAB.

SPECIAL INSPECTIONS

THE FOLLOWING ELEMENTS OF CONSTRUCTION SHALL HAVE CONTINUOUS INSPECTION.

1. CONCRETE.
2. BOLTS INSTALLED IN CONCRETE.
3. PLACING OF REINFORCING STEEL.
4. PILING.
5. SEE GEOTECHNICAL ENGINEER'S REPORT FOR SPECIFIC INSPECTION REQUIREMENTS BY SOILS ENGINEER'S REPRESENTATIVE.

CONSTRUCTION JOINTS

1. ALL CONSTRUCTION JOINTS SHALL BE CONSTRUCTED IN ACCORDANCE WITH CODE SECTION 1906.4 AND THE TYPICAL CONSTRUCTION JOINT DETAILS SHOWN ON THE STRUCTURAL DRAWINGS.
2. ALL SURFACES OF CONSTRUCTION JOINTS SHALL BE CLEANED TO REMOVE DUST, CHIPS, OR OTHER FOREIGN MATTER PRIOR TO PLACING THE ADJACENT CONCRETE.
3. THE CONTRACTOR SHALL SUBMIT THE PROPOSED LOCATIONS OF CONSTRUCTION JOINTS TO THE ENGINEER FOR APPROVAL BY THE STRUCTURAL ENGINEER BEFORE STARTING CONSTRUCTION.

Date SEPT 15, 2017

kpff
6080 Center Dr., Suite 300
Los Angeles, CA 90045
O: 310.665.1536
F:310.665.9070
www.kpff.com

Revision No.
1 SEPT. 15, 2017

MARINA ISLAND BRIDGE
5300 BEETHOVEN STREET
Los Angeles, California

STRUCTURAL GENERAL NOTES

REGISTERED PROFESSIONAL ENGINEER
JOSEPH E. STEWART
No. 3065
Exp. 6/30/18
STRUCTURAL
STATE OF CALIFORNIA

Job No. 1700219-12

S-1

File: K:\2017\1700219-12 - Marina Island Bridge\5 SDraft\S-1.DWG
Plotted: 9/15/17 at 2:16pm By: rtoro
XREFs: 971309tb.dwg

PLAN NOTES:

1. SEE SHEET S-1 FOR GENERAL NOTES.
2. SEE SHEET S-1 FOR CONSTRUCTION LOADING CRITERIA.
3. SEE CIVIL PLANS FOR STATIONING, ELEVATIONS, AND ADDITIONAL DETAILS.

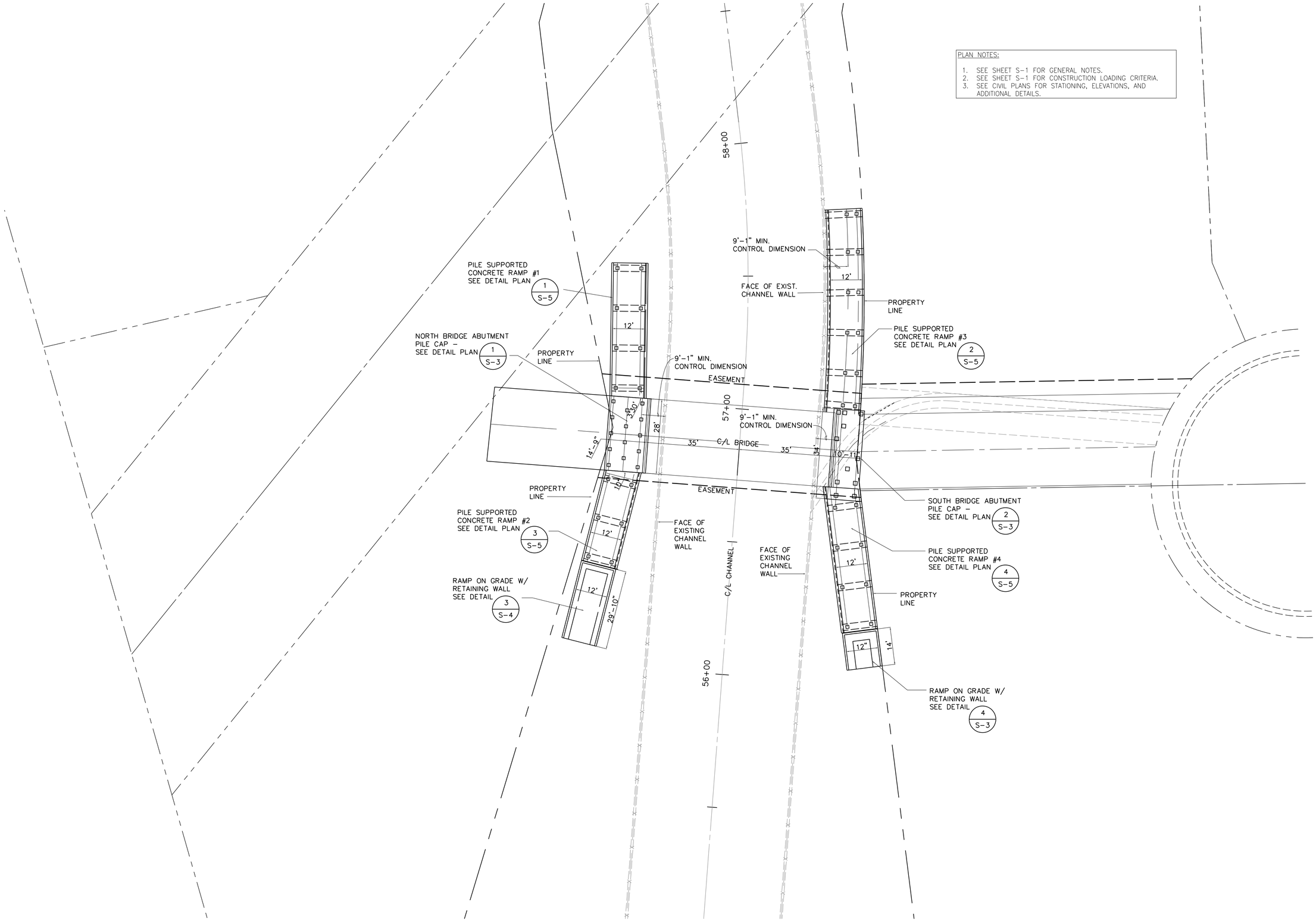

Date SEPT 15, 2017

Revision No.

1 SEPT. 15, 2017

kpff
6080 Center Dr., Suite 300
Los Angeles, CA 90045
P:310.665.1536
F:310.665.9070
www.kpff.com

MARINA ISLAND BRIDGE

5300 BEETHOVEN STREET
Los Angeles, California

FOUNDATION PLAN

REGISTERED PROFESSIONAL ENGINEER JOSEPH E. STEWART No. 3065 Exp. 6/30/18 STRUCTURAL STATE OF CALIFORNIA

Job No. 1700219-12

S-2

File: K:\2017\1700219-12 - Marina Island Bridge\S-SDraft\S-2.dwg
Plotted: 9/15/17 at 2:45pm By: ftorres
XREFs: 9713309b.dwg STRICT.DWG

PILE TOP & TIP ELEVATION SCHEDULE		
PILE I.D.	PILE TOP EL.	PILE TIP EL.
A	EL.=18.96	EL.=-30.0
B	EL.=15.96	EL.=-30.0

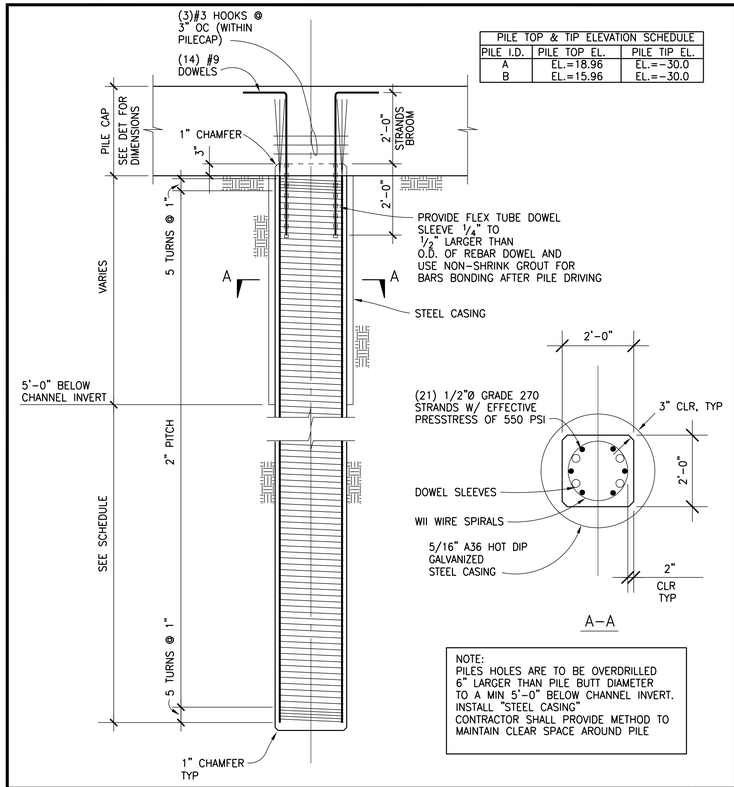

NOTE:
PILES HOLES ARE TO BE OVERDRILLED 6" LARGER THAN PILE BUTT DIAMETER TO A MIN 5'-0" BELOW CHANNEL INVERT. INSTALL "STEEL CASING" CONTRACTOR SHALL PROVIDE METHOD TO MAINTAIN CLEAR SPACE AROUND PILE

TYPICAL PILE AT ABUTMENT DETAIL

1/2"=1'-0" **1**

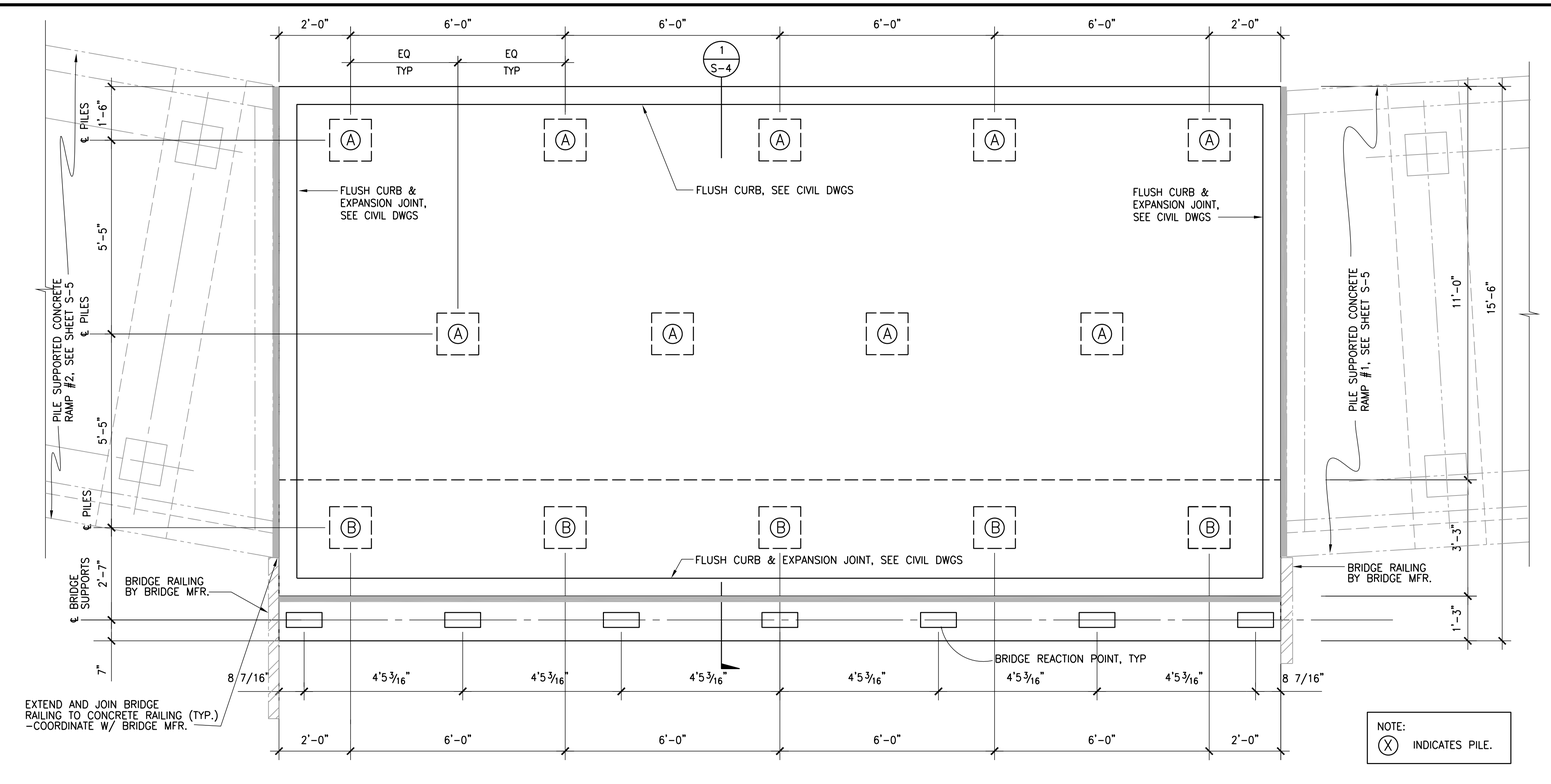

NOTE:
(X) INDICATES PILE.

NORTH ABUTMENT PLAN

1/2"=1'-0" **1**

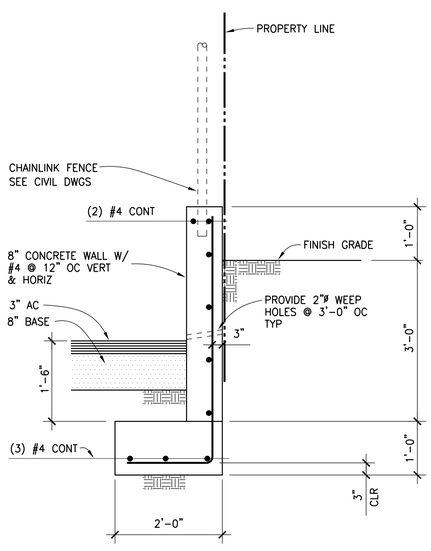

RETAINING WALL AT DRIVEWAY

3/4"=1'-0" **4**

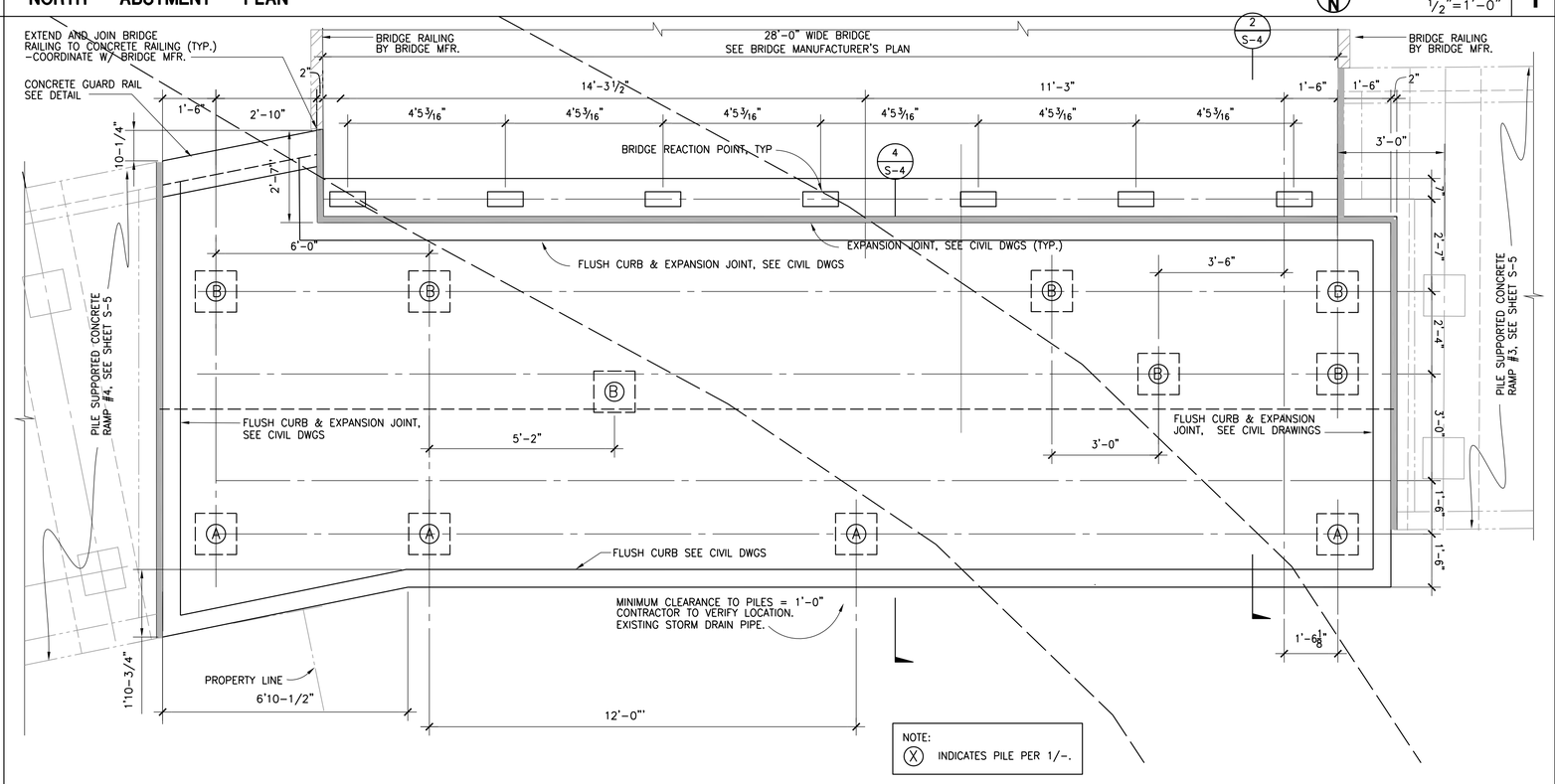

NOTE:
(X) INDICATES PILE PER 1/-.

SOUTH ABUTMENT PLAN

1/2"=1'-0" **2**

Date SEPT 15, 2017

Revision No.
1 SEPT. 15, 2017

kpff
6080 Center Dr., Suite 300
Los Angeles, California 90045
P:310.665.5336
F:310.665.9070
www.kpff.com

MARINA ISLAND BRIDGE

5300 BEETHOVEN STREET
Los Angeles, California

SECTIONS & DETAILS

–

REGISTERED PROFESSIONAL ENGINEER JOSEPH E. STEWART No. 3065 Exp. 6/30/18 STRUCTURAL STATE OF CALIFORNIA

Job No. 1700219–12

S–3

File: K:\2017\1700219-12 - Marina Island Bridge\S SDraft\S-3.dwg
Plotted: 9/15/17 at 2:25pm By: rflore
XREFs: 97L309tb.dwg

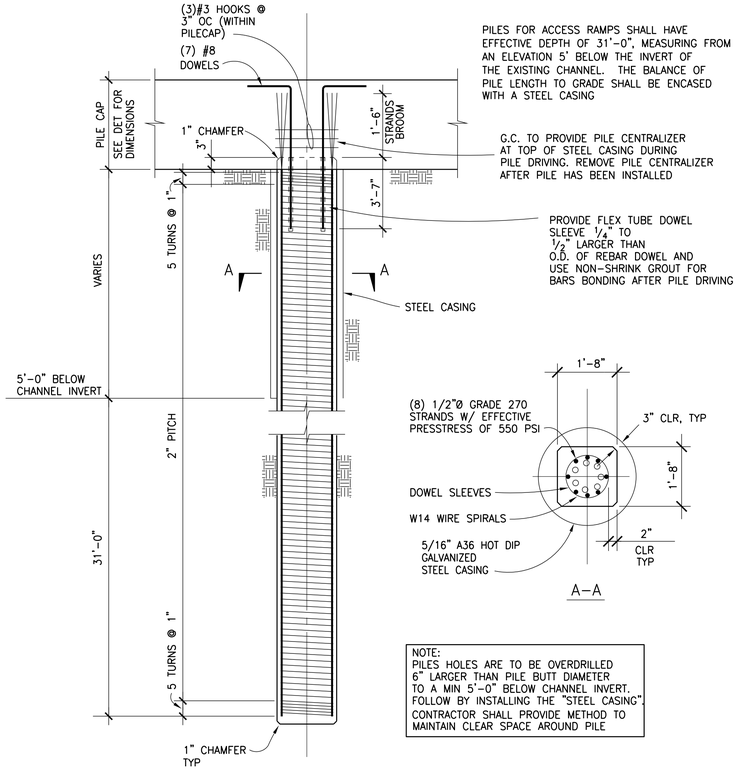

TYPICAL PILE AT ACCESS RAMPS DETAIL 1/2"=1'-0" **7**

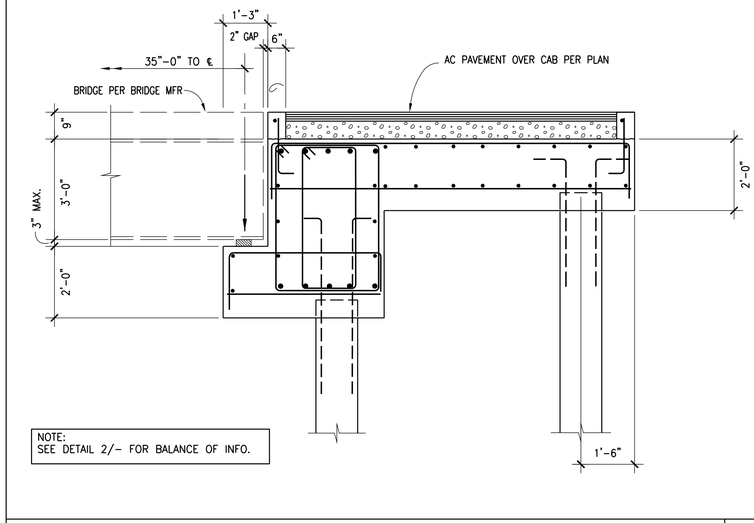

SECTION AT SOUTH ABUTMENT 1/2"=1'-0" **4**

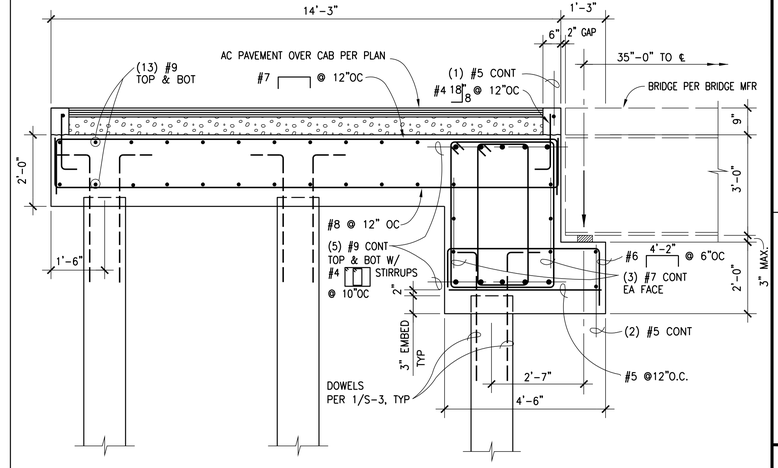

SECTION AT NORTH ABUTMENT 1/2"=1'-0" **1**

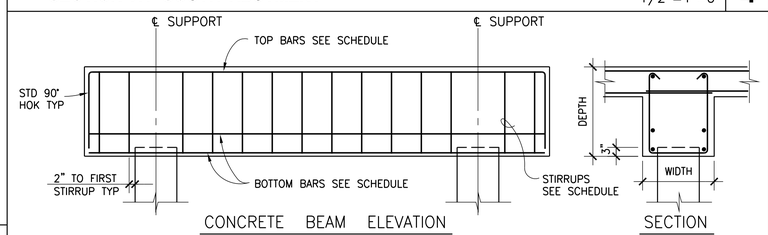

CONCRETE BEAM SCHEDULE

MARK	SIZE		℄ SUPPORT / ℄ SUPPORT	STIRRUPS/ TIES	REMARKS
	WIDTH	DEPTH			
B–1	28"	30"	(2) #8 / (2) #8	#4@12"OC	
B–2	28"	30"	(4) #8 / (3) #8	#5@12"OC	

CONCRETE BEAM DETAIL AND SCHEDULE 1/2"=1'-0" **5**

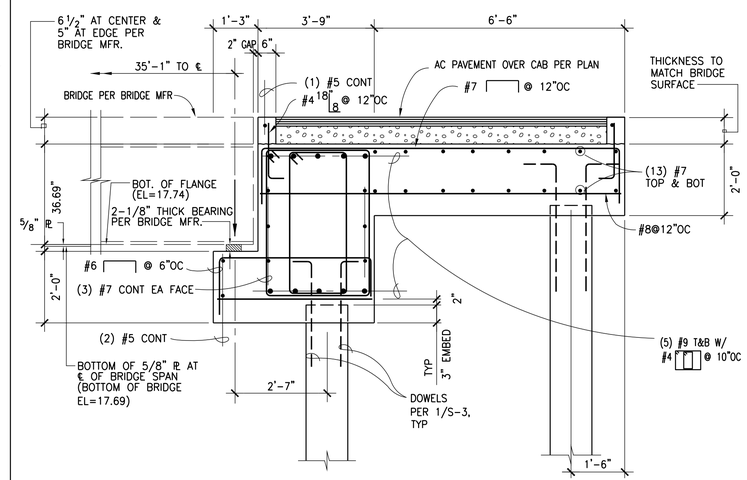

SECTION AT SOUTH ABUTMENT 1/2"=1'-0" **2**

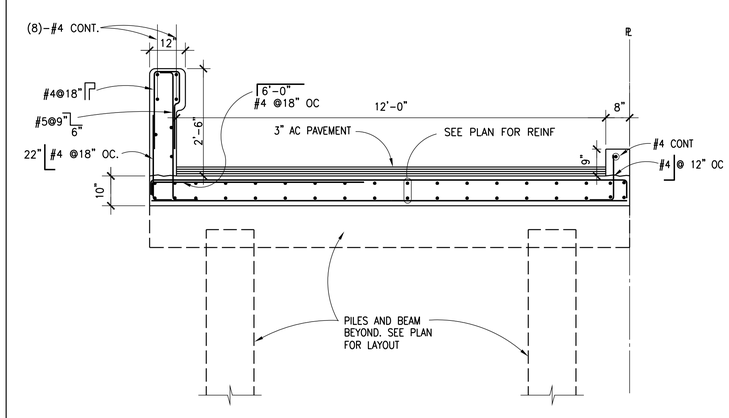

TYP. ACCESS RAMP SECTION 1/2"=1'-0" **6**

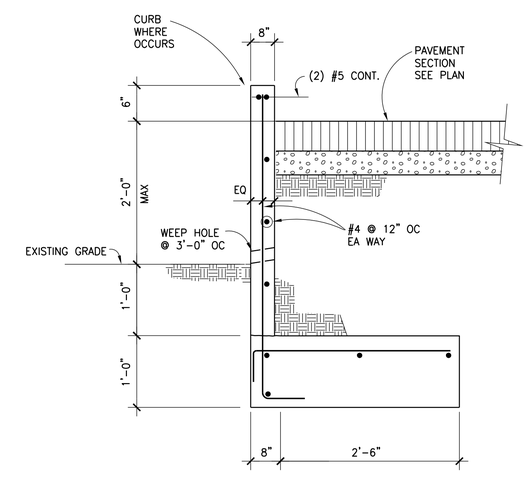

SECTION-RETAINING WALL 1"=1'-0" **3**

-

kpff
6080 Center Dr., Suite 300
Los Angeles, CA 90045
P:310.665.5336
F:310.665.9070
www.kpff.com

Date SEPT 15, 2017

Revision No.	
1	SEPT. 15, 2017

MARINA ISLAND BRIDGE

5300 BEETHOVEN STREET
Los Angeles, California

SECTIONS & DETAILS
-

REGISTERED PROFESSIONAL ENGINEER JOSEPH E. STEWART No. 3065 Exp. 6/30/18 STRUCTURAL STATE OF CALIFORNIA

Job No. 1700219-12

S-4

File: K:\2017\1700219-12 - Marina Island Bridge\S SDraft\S-4.dwg
Plotted: 9/15/17 2:46pm By: rbro
XREFS: 97130ltb.dwg

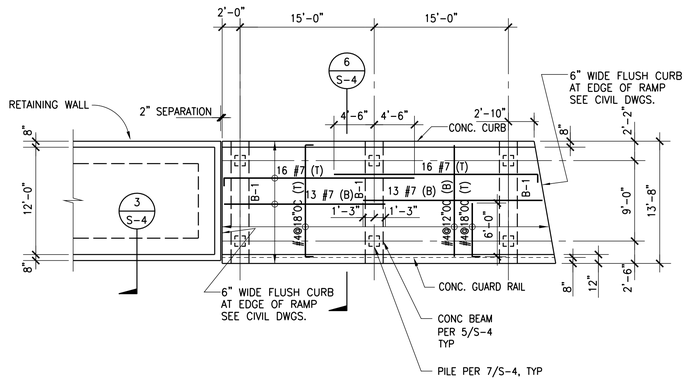

PLAN - RAMP #2 |1"=1'-0" 3

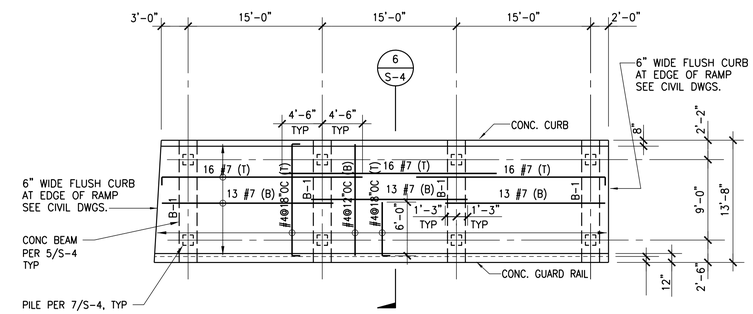

PLAN - RAMP #1 |1"=1'-0" 1

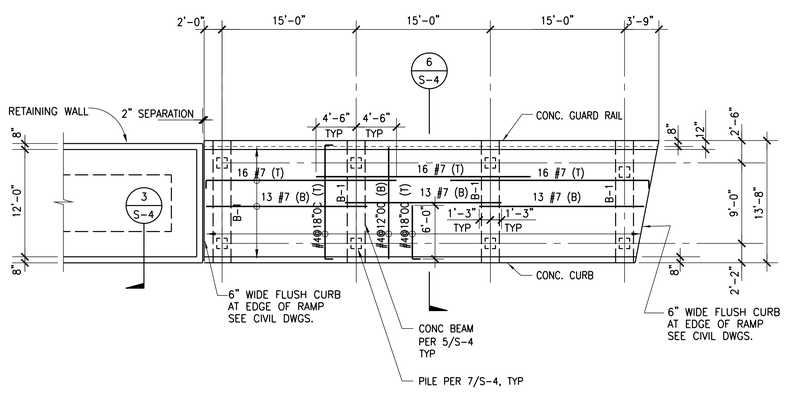

PLAN - RAMP #4 |1"=1'-0" 4

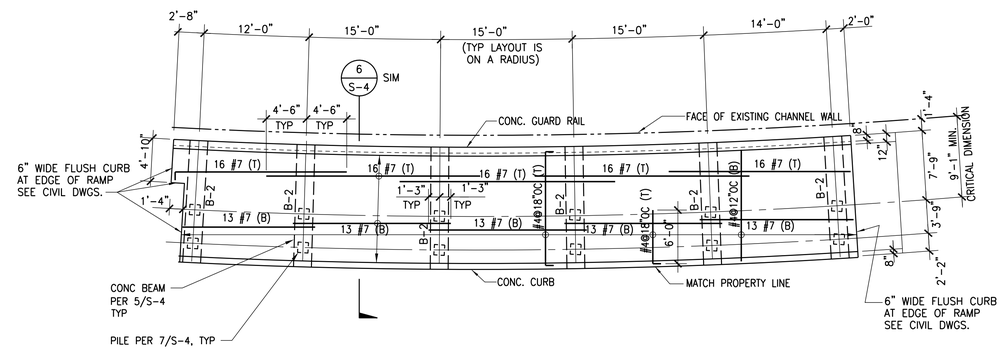

PLAN - RAMP #3 |1"=1'-0" 2

Date SEPT 15, 2017

Revision No.

1 SEPT. 15, 2017

kpff
6080 Center Dr., Suite 300
Los Angeles, CA 90045
P:310.665.5336
F:310.665.9070
www.kpff.com

MARINA ISLAND BRIDGE

5300 BEETHOVEN STREET
Los Angeles, California

RAMP PLANS

REGISTERED PROFESSIONAL ENGINEER
JOSEPH E. STILWELL
No. 3065
Exp. 6/30/18
STRUCTURAL
STATE OF CALIFORNIA

Job No. 1700219-12

S-5

File: K:\2017\1700219-12 - Marina Island Bridge\S Sdraft\S-5.dwg
Plotted: 9/15/17 at 2:48pm By: rfore
XREFs: 9713039b.dwg

DEPARTMENT OF THE ARMY
LOS ANGELES DISTRICT, U.S. ARMY CORPS OF ENGINEERS
915 WILSHIRE BOULEVARD, SUITE 930
LOS ANGELES, CALIFORNIA 90017

DEC 07 2017

Office of the Commander
and District Engineer

Mr. Anthony Nyivih
Deputy Director
Los Angeles County Flood Control District
P.O. Box 1460
Alhambra, CA 91802

Dear Mr. Nyivih:

The Los Angeles District of the U.S. Army Corps of Engineers (USACE) has performed an evaluation of your request to alter/modify Centinela Creek Channel (Project) right-of-way by constructing a private bridge (Section 408 Request). The Section 408 Request proposal consists of construction of a single span steel bridge. The Project features are operated and maintained by Los Angeles County Flood Control District. This evaluation was undertaken pursuant to Section 14 of the Rivers and Harbors Act of 1899, 33 USC 408 (Section 408) and was performed in accordance with Engineer Circular (EC) 1165-2-216, in addition to other applicable laws, regulations and policies.

Based on our evaluation, the Los Angeles District grants your Section 408 Request to alter the Project for the following reasons: we have concluded that the design within the project right-of-way meets current USACE criteria, is not detrimental to the functioning of the existing flood control project, and provides value for the public. Enclosed, please find two copies of USACE Permission Instrument Number SPL-408-2016-015 (Permission). Please execute both copies of the enclosed Permission indicating your acceptance of its terms and conditions and return them to our Section 408 Coordinator for execution. A copy of the fully executed Permission will be returned to you for your files.

This Permission to modify and/or alter the Project is conditioned upon your compliance with all of the stated conditions, both general and special. If you fail to comply with the terms and conditions of this Permission or if your activity changes in scope, size, or in any other substantive manner, you are required to contact the Corps immediately prior to initiating or continuing work. This Permission does not obviate the necessity to obtain a Department of the Army permit for activities which involve the discharge of dredge or fill material or the placement of fixed structures in the waters of the United States, pursuant to the provisions of Section 10 of the Rivers and Harbors Act (33 USC 403) and/or Section 404 of the Clean Water Act (33 USC 1344).

Construction activities may not begin in waters of the United States unless and until applicable permits have been acquired.

This Permission is effective only insofar as the jurisdiction of the Department of the Army applies to the Project. You may be required to obtain additional permits, comply with applicable laws or regulations as may be required by Federal, state, or local statutes, and/or acquire any necessary real estate rights or permissions from third parties necessary to commence the permitted actions.

For any questions regarding this evaluation, please contact Mr. Marvin Mai, (213) 452-3190, spl.408permits@usace.army.mil.

Sincerely,

Encl

Peter J. Stampersky
Lieutenant Colonel, U.S. Army
Deputy Commander
and Deputy District Engineer

DEPARTMENT OF THE ARMY
33 U.S.C. § 408 PERMISSION
U. S. Army Corps of Engineers
Los Angeles District

REQUESTER: Los Angeles County Flood Control District, P.O. Box 1460, Alhambra, CA 91802

PERMISSION NUMBER: 408-2016-015 (FCDP2017006112)

ISSUING OFFICE: U.S. Army Corps of Engineers, Los Angeles District, Engineering Division

CORPS PERMISSION COORDINATOR: Mr. Marvin Mai, (213) 452-3190, spl.408permits@usace.army.mil

AFFECTED FEDERAL PROJECT AND DESCRIPTION: Centinela Creek Channel (Federal Project)

LOCATION: LAT 34.9796 N, LON 118.4231 W

APPROVED MODIFICATION OR ALTERATION OF THE FEDERAL PROJECT:
The proposed work includes construction of a single span steel bridge resting on two (2) pile bent type abutments. No structure will be constructed within the channel that will impact its integrity including that of the channel walls. The plans were previously approved by the Department of the Army, Corps of Engineers under EE98-86a.

Detailed drawings of the Section 408 Activity are retained by the Corps and filed pursuant to the Permission number listed above.

I. General Conditions

1. The Corps acknowledges that the 408 Activity will be carried out by Ilan Israely (Third Party) and that this Permission is being issued to the Non-Federal Sponsor, pursuant to the Non-Federal Sponsor's obligations under any applicable Federal Project agreement and as codified in 33 U.S.C. 2213 (j). The Non-Federal Sponsor shall ensure compliance with and enforce all requirements referenced in General Condition "C" and Special Conditions, below, against Third Party by separate agreement or permission. The Corps reserves the right to enforce all conditions stated herein against the Non-Federal Sponsor directly. This Permission shall not diminish the overall responsibility of the Non-Federal Sponsor to operate and maintain the Federal Project as described in the Federal Project's Operation and Maintenance Manual.

2. In the event the Third Party fails to maintain the 408 Activity in good condition and in conformance with the terms and conditions of this Permission or the agreement or separate permission referenced in General Condition "C" and Special Conditions, below, the Non-Federal Sponsor shall be responsible for taking any and all actions necessary to prevent or mitigate any interference with the operation of the Federal Project that may result from the Third Party's failure, in accordance with the following:

   a. Except when immediate action is necessary to prevent or minimize injury to persons or damage to property or the environment, the Non-Federal Sponsor shall, prior to commencing any such actions, provide notice to the Corps of the proposed actions and obtain the Corps' approval.

   b. When the Non-Federal Sponsor takes immediate action to prevent injury to persons or damage to property or the environment, The Non-Federal Sponsor shall notify the Corps of such actions as soon as reasonably practical and shall obtain the Corps' approval of any additional actions reasonably necessary to prevent or mitigate the interference with the operation of the Federal Project.

   c. In the event that actions by the Non-Federal Sponsor in accordance with this General Condition "B" fail to prevent interference or potential interference with the operation of the Federal Project resulting from modifications or alterations by the Third Party, the Non-Federal Sponsor then shall be responsible to maintain the 408 Activity or to take action to remove the 408 Activity in a manner acceptable to the Corps. Removal shall be conducted only after consultation with the Corps and upon modification or amendment of this Permission.

3. Prior to the commencement of any construction related to the 408 Activity, the Non-Federal Sponsor shall enter into an agreement with, or issue a separate permission to, the Third Party which shall impose the following requirements on the Third Party:

   a. The United States shall not be responsible for damages to property or injuries to persons which may arise from or be incident to the construction, operation, maintenance, repair, rehabilitation, or replacement of the 408 Activity, or for damages to the Federal Project. Third Party shall hold the United States harmless from any and all such claims except to the extent caused by the fault or negligence of the United States or its contractors.

   b. Third Party shall acknowledge that the issuance of the Permission shall not excuse or exempt the Third Party's compliance with any Federal, state, or local law or regulation that is otherwise applicable, , including, but not limited to, those regarding construction, health, safety, water supply, sanitation, use of pesticides, and licenses or permits necessary for the 408 Activity.

c. Third Party shall maintain the 408 Activity in good condition and in conformance with the terms and conditions of this Permission. Third Party shall not be relieved of this requirement even if the 408 Activity is abandoned. Should the Third Party wish to cease to maintain the 408 Activity or desire to abandon it, Third Party shall request the Non-Federal Sponsor to obtain from the Corps a modification of this Permission, which may require additional construction activities to abandon the facility.

d. If previously unknown historic or archeological remains are discovered in carrying out the 408 Activity, Third Party shall cease activity, protect the site, and immediately notify the Non-Federal Sponsor and the Corps. The Corps will initiate Federal and state coordination required to determine if the remains warrant a recovery effort or if the site is eligible for listing in the National Register of Historic Places.

e. If the scope of the 408 Activity changes from the approved plans and specifications upon which this Permission is based, Third Party shall request the Non-Federal Sponsor to resubmit the Permission application with the Permission number and revisions clearly identified. Work associated with the 408 Activity that does not pertain to the revised portion of the project, may continue while the revisions are being reviewed unless the Corps indicates otherwise.

f. Third Party shall apprise the Non-Federal Sponsor and the Corps' Permission Coordinator of the anticipated start and completion dates of construction of the 408 Activity.

g. Third Party shall notify the Non-Federal Sponsor and the Corps of the start date for construction and a copy of the construction schedule at least one (1) week prior to starting. Updated construction schedules shall be made available upon request. An invitation shall be sent to the Non-Federal Sponsor and the Corps for any kick-off meetings and final walk-through, as applicable.

h. Third Party shall allow the Non-Federal Sponsor and Corps representatives to inspect the 408 Activity at any time deemed necessary to ensure that it is being or has been accomplished in accordance with the terms and conditions of this Permission.

i. Third Party shall oversee the conduct of the work and ensure the 408 Activity is being constructed in accordance with the plans and specifications approved by the Corps.

j. Upon completion of construction of the 408 Activity, Third Party shall submit electronic copies of the as-built plans of the 408 Activity to the Non-Federal Sponsor and the Corps, which are signed by the Third Party's

engineer of record. Electronic copies of the as-built plans shall be submitted in .pdf format.

k. Work shall not begin in waters of the United States until Third Party first obtains a separate, additional Department of the Army permission for activities which involve the discharge of dredge or fill material or the placement of fixed structures in the waters of the United States, pursuant to the provisions of Section 10 of the Rivers and Harbors Act of 3 March 1899 (33 USC 403), and Section 404 of the Clean Waters Act (33 USC 1344).

l. Should construction activities fail to commence within two (2) years after the effective date of this permission, this permission shall be immediately revoked.

4. The determination of this office that issuance of this permission is not contrary to the public interest was made in reliance on the information submitted. This office may reevaluate its decision on this permission at any time the circumstances warrant. Circumstances that could require a reevaluation include, but are not limited to, the following:

   a. Third Party fails to comply with any of the requirements contained in the agreement or separate permission referenced in General Condition "C", below, and the Non-Federal Sponsor fails to take appropriate action, within a reasonable period of time, to enforce those requirements and/or to prevent any interference with operation of the Federal Project caused by, or related to, Third Party's non-compliance.

   b. The information provided by the Non-Federal Sponsor in support of the permission application proves to be incomplete or inaccurate.

   c. Significant new information surfaces which the Corps did not consider in reaching the original public interest decision.

5. Corps has examined this Permission and determines that the Permission conditions are sufficient or until new Permission conditions are incorporated.

II. Special Conditions

1. Geotechnical inspection and testing services shall be provided during pile installation and a report of those services shall be prepared by the engineer after construction is completed and submitted to the USACE.

Nothing in this Permission shall be construed as abrogating or otherwise diminishing the responsibility of the Requester to hold and save the Government free from all damages arising from construction, operation, maintenance, repair, rehabilitation, or replacement of the Federal Project and any alterations or modifications, including any alteration or

modification approved herein, except to the extent caused by the fault or negligence of the United States or its contractors.

By signing this Permission, the signatory to this Permission hereby represents and warrants that s/he is duly authorized to execute and bind Los Angeles County Flood Control District to the terms and conditions contained within this Permission. This Permission shall become effective upon signature below by the U.S. Army Corps of Engineers official.

12/12/2017

Anthony Nyivih
Assistant Deputy Director
Los Angeles County Flood Control District

Date

12/12

12/18/2018

Gary J. Lee, P.E.
Chief, Engineering Division
Los Angeles District
U.S. Army Corps of Engineers

Date

FACILITY MODIFICATION AGREEMENT
NO.M2017006112
FACILITY NAME: Centinela Creek
FLOOD PERMIT NO. FCDP2017006112 (PCFL 201502271)
PARCEL NOS. 4211008014 and 4211007909
408 PERMIT NO. SPL408-2016-015

AGREEMENT RE MODIFICATION OF FLOOD CONTROL FACILITY

This Agreement is entered into by and between the

LOS ANGELES COUNTY FLOOD CONTROL DISTRICT,
a body corporate and politic,

herein referred to as "DISTRICT"

and

ILAN ISRAELY,

herein referred to as "PERMITTEE"

RECITALS

DISTRICT operates a flood control facility, known as Centinela Creek ("FACILITY"), located in City of Los Angeles, State of California; and

The FACILITY was constructed by the Federal Government and is subject to the provisions of 33 U.S.C. Section 408; and

PERMITTEE proposes to make certain modifications to the FACILITY that require prior approval from the Federal Government, pursuant to 33 U.S.C. Section 408; and

DISTRICT, as the non-Federal sponsor of the FACILITY, has obtained, on behalf of PERMITTEE, a permit under 33 U.S.C. Section 408 ("408 PERMIT") from the U.S. Army Corps of Engineers ("CORPS"), to implement PERMITTEE's proposed modifications to the FACILITY; and

The 408 PERMIT is attached hereto as Exhibit 1; and

The 408 PERMIT contains a condition under which the DISTRICT must enter into an agreement with the PERMITTEE that imposes certain requirements on the PERMITTEE, and this Agreement is intended to satisfy that 408 PERMIT condition; and

PERMITTEE has also applied for a permit from DISTRICT ("FLOOD PERMIT") to implement the PERMITTED ACTIVITY, and PERMITTEE and DISTRICT intend that the FLOOD PERMIT become operative concurrently with this Agreement; and

The FLOOD PERMIT is attached hereto as Exhibit 2;

NOW, THEREFORE, in consideration of these recitals, the DISTRICT and PERMITTEE mutually agree as follows:

SECTION 1. Permitted Activity

1.1. PERMITTEE's modifications to the FACILITY, as described in and authorized by the 408 PERMIT, shall hereinafter be referred to as the "PERMITTED ACTIVITY".

1.2. PERMITTEE shall operate and maintain the PERMITTED ACTIVITY in a safe, clean, and orderly condition at all times, and in a manner that will not interfere with the operation or maintenance of the FACILITY by DISTRICT. PERMITTEE shall obtain a separate permit from DISTRICT prior to performing any maintenance work (including, without limitation, any repair, replacement or reconstruction) that involves entering upon or taking access to the FACILITY.

1.3. In the event PERMITTEE breaches PERMITTEE's obligations described in Section 1.2, or any of them, the following shall apply:

1.3.1. In the event PERMITTEE fails to cure such breach within the time specified by DISTRICT in a written notice to PERMITTEE describing said breach, or within such other time period as may be agreed to by DISTRICT, DISTRICT may, in its sole discretion, take any and all actions reasonably necessary to prevent or mitigate any interference with DISTRICT's operation or maintenance of the FACILITY that may result from PERMITTEE's breach.

1.3.2. Notwithstanding subsection 1.3.1, above, when immediate action is necessary to prevent injury to persons or damage to property or the environment caused by PERMITTEE's breach, DISTRICT may, in its sole discretion, take such immediate action without prior notice to PERMITTEE; provided, however, that DISTRICT shall provide notice to PERMITTEE as soon thereafter as is reasonably practical.

1.3.3. If DISTRICT takes action(s) under subsections 1.3.1 or 1.3.2, above, DISTRICT shall submit a billing invoice to PERMITTEE indicating the costs and expenses reasonably incurred by DISTRICT in connection with said action(s) and PERMITTEE shall

reimburse DISTRICT all such costs and expenses within thirty (30) days of the billing invoice.

1.4. PERMITTEE acknowledges that the acquisition of any permits or other approvals for the operation and maintenance of the PERMITTED ACTIVITY required by other affected public agencies, and the consent of any affected owners or easement holder(s) other than the DISTRICT, are the responsibility of the PERMITTEE.

1.5. If PERMITTEE proposes to change the scope of the PERMITTED ACTIVITY from the approved plans and specifications upon which the 408 PERMIT and the FLOOD PERMIT were issued, PERMITTEE shall submit revised plans and specifications with the respective permit numbers and proposed revisions clearly identified, to DISTRICT. DISTRICT shall review the proposed revisions for conformance with DISTRICT's criteria and shall also request approval of the proposed revisions from the CORPS. If the proposed revisions are approved by both DISTRICT and the CORPS, DISTRICT shall provide written notice of the approval to PERMITTEE. PERMITTEE shall not implement any of the proposed revisions until it has received written approval from DISTRICT; however, any work or activity associated with the PERMITTED ACTIVITY that does not pertain to the proposed revisions may continue while the proposed revisions are being reviewed by DISTRICT and the CORPS, unless otherwise directed by either DISTRICT or the CORPS.

1.6. PERMITTEE shall allow DISTRICT and the CORPS to inspect the PERMITTED ACTIVITY at any reasonable time.

1.7. In the event that any property of DISTRICT becomes damaged as a result of the operation or maintenance of the PERMITTED ACTIVITY, PERMITTEE shall promptly obtain a separate permit from DISTRICT to repair or replace the damaged property, and, at PERMITTEE's sole expense, repair and/or replace the damaged property to the reasonable satisfaction of DISTRICT. Should PERMITTEE fail to do so, DISTRICT may perform such work and submit a billing invoice to PERMITTEE indicating the costs and expenses reasonably incurred by DISTRICT in connection with said work. PERMITTEE shall pay all such costs and expenses within thirty (30) days of the date of the invoice.

1.8. Should PERMITTEE wish to cease its operation and maintenance of the PERMITTED ACTIVITY, it shall be permitted to do so only in accordance with the provisions described in Section 2, below.

1.9. The provisions of this Agreement are intended to be supplemental to the FLOOD PERMIT. The provisions of the FLOOD PERMIT shall be deemed to be incorporated into this Agreement, by reference, and

PERMITTEE shall comply with all the provisions of both this Agreement and the provisions contained in the FLOOD PERMIT.

SECTION 2. Termination of Permitted Activity

2.1. DISTRICT shall have the right to terminate the PERMITTED ACTIVITY in the event PERMITTEE breaches any term or condition of this Agreement and fails to cure such breach within the time specified by DISTRICT in a written notice to PERMITTEE describing said breach, or within such other time period as may be agreed to by DISTRICT.

2.2. PERMITTEE may terminate the PERMITTED ACTIVITY, for any reason, by giving DISTRICT at least thirty (30) days advance, written notice thereof.

2.3. If the PERMITTED ACTIVITY is terminated, DISTRICT may, in its sole discretion, provide to PERMITTEE a written notice to remove the PERMITTED ACTIVITY, and PERMITTEE shall remove the PERMITTED ACTIVITY and restore the FACILITY to the reasonable satisfaction of the DISTRICT, at no cost to DISTRICT, in accordance with the following:

2.3.1. Prior to commencing the removal of the PERMITTED ACTIVITY, PERMITTEE shall apply for a separate permit therefor from DISTRICT. As part of DISTRICT's review of the permit application, DISTRICT shall request the CORPS to modify the 408 PERMIT to authorize the removal of the PERMITTED ACTIVITY.

2.3.2. If the CORPS modifies the 408 PERMIT to authorize the removal of the PERMITTED ACTIVITY, and PERMITTEE's application is otherwise acceptable to DISTRICT, DISTRICT shall issue to PERMITTEE a permit to remove the PERMITTED ACTIVITY and restore the FACILITY. The removal/restoration permit shall include any conditions imposed by the CORPS as well as those conditions imposed by DISTRICT.

2.3.3. PERMITTEE shall complete the removal of the PERMITTED ACTIVITY and all restoration of the FACILITY within the time specified in the removal/restoration permit issued by DISTRICT, or within such other time period as may be agreed to by DISTRICT.

2.4. If PERMITTEE fails to remove the PERMITTED ACTIVITY and restore the FACILITY in accordance with subsection 2.3, DISTRICT may, in its sole discretion, remove the PERMITTED ACTIVITY and restore the FACILITY.

2.5. If DISTRICT removes the PERMITTED ACTIVITY and restores the FACILITY pursuant to subsection 2.4, DISTRICT shall submit a billing invoice to PERMITTEE indicating the costs and expenses reasonably incurred by DISTRICT in connection with said removal and restoration,

and PERMITTEE shall reimburse DISTRICT all such costs and expenses within thirty (30) days of the billing invoice.

SECTION 3. Miscellaneous Terms and Conditions

3.1. Indemnification

3.1.1. PERMITTEE shall indemnify, defend, and hold DISTRICT, the County of Los Angeles (when acting on behalf of DISTRICT), and the United States, and their respective officers, employees, and agents harmless from and against any claims, demands, liability, damages, costs, and expenses, arising from or caused by the operation, maintenance, repair, rehabilitation, replacement, use or removal of the PERMITTED ACTIVITY, or any portion thereof; provided, however, that PERMITTEE's obligations to indemnify DISTRICT or the County of Los Angeles or the United States, respectively, shall not apply to any claim, demand, liability, damage, cost or expense to the extent that such claim, demand, liability, damage, cost or expense is caused by the fault or negligence of DISTRICT, or the County of Los Angeles, or the United States, respectively, or any of their respective officers, employees or agents.

3.1.2. PERMITTEE shall include DISTRICT, the County of Los Angeles and the United States within the protection of any indemnification clause contained in any ancillary contract relating to the PERMITTED ACTIVITY.

3.2. PERMITTEE acknowledges and agrees that the issuance of the FLOOD PERMIT and the 408 PERMIT does not excuse or exempt PERMITTEE's compliance with any federal, state or local law or regulation that is otherwise applicable to the operation or maintenance of the PERMITTED ACTIVITY.

3.3. If previously unknown historic or archeological remains are discovered in carrying out the Permitted Activity, PERMITTEE shall cease activity, protect the site, and immediately notify the DISTRICT and the CORPS. The CORPS will initiate Federal and state coordination required to determine if the remains warrant a recovery effort or if the site is eligible for listing in the National Register of Historic Places.

3.4. If the scope of the Permitted Activity changes from the approved plans and specifications upon which this Permit is based, PERMITTEE shall request the DISTRICT to resubmit the permit application with the permit number and revisions clearly identified. Work associated with the Permitted Activity that does not pertain to the revised portion of the

project, may continue while the revisions are being reviewed unless the CORPS indicates otherwise.

3.5. PERMITTEE shall apprise the DISTRICT and the CORPS' Permit Coordinator of the anticipated start and completion dates of construction of the Permitted Activity.

3.6. PERMITTEE shall notify the DISTRICT and the CORPS of the start date for construction and a copy of the construction schedule at least one (1) week prior to starting. Updated construction schedules shall be made available upon request. An invitation shall be sent to the DISTRICT and the CORPS for any kick-off meetings and final walk-through, as applicable.

3.7. PERMITTEE shall allow the DISTRICT and CORPS representatives to inspect the Permitted Activity at any time deemed necessary to ensure that it is being or has been accomplished in accordance with the terms and conditions of this Permit.

3.8. PERMITTEE shall oversee the conduct of the work and ensure the Permitted Activity is being constructed in accordance with the plans and specifications approved by the CORPS.

3.9. Upon completion of construction of the Permitted Activity, PERMITTEE shall submit electronic copies of the as-built plans of the Permitted Activity to the DISTRICT and the CORPS, which are signed by the PERMITTEE's engineer of record. Electronic copies of the as-built plans shall be submitted in .pdf format.

3.10. Work shall not begin in waters of the United States until PERMITTEE first obtains a separate, additional Department of the Army permit for activities which involve the discharge of dredge or fill material or the placement of fixed structures in the waters of the United States, pursuant to the provisions of Section 10 of the Rivers and Harbors Act (33 USC 403), and Section 404 of the Clean Water Act (33 USC 1344).

3.11. Should construction activities fail to commence within two (2) years after the effective date of this permission, this permission shall be immediately revoked.

3.12. Except as to fuels, lubricants and products associated with motorized vehicles, equipment, gardening or maintenance-related substances, or all of the above, PERMITTEE shall not cause or allow the presence, use, storage, or disposal of any hazardous substances on or about the FACILITY without the prior written consent of DISTRICT which consent shall not be unreasonably denied. In the event of spillage, leakage or

escape of any hazardous substance onto the FACILITY, PERMITTEE shall immediately notify DISTRICT by calling (800) 675-4357. If the spillage, leakage or escape was caused by PERMITTEE, PERMITTEE shall promptly remove any such substance from the PREMISES to DISTRICT's satisfaction. In addition to removing any of PERMITTEE's hazardous substances, PERMITTEE shall be liable for and reimburse DISTRICT for any and all cost and expenses that DISTRICT may incur or suffer as a result thereof. Such responsibility shall include cost or expenses as DISTRICT may incur by reason of Federal, State, local or other authoritative agency's laws and regulations. Notwithstanding the foregoing, PERMITTEE shall have no responsibility regarding any spill, leak or escape to the extent caused by any of DISTRICT's tenants, licensees or easement holders.

3.13. PERMITTEE and DISTRICT shall have no financial obligation to each other under this Agreement, except as herein expressly provided.

3.14. Any notice to be given or document to be delivered by DISTRICT or PERMITTEE to the other party may be delivered in person to either party or by private courier or may be deposited in the United States mail, with postage prepaid and addressed to the party for whom intended as follows:

To DISTRICT:
Los Angeles County Flood Control District
Attention: Land Development Division - Permits
P.O. Box 1460
900 South Fremont Avenue, Alhambra, CA 91802-1460
tel.: (626) 458-3129
for Emergencies, contact (626) 458-HELP (4357)

To PERMITTEE:
Ilan Israely
5300 Beethoven Street
Los Angeles, CA 90066
tel.: (310) 306-5556

3.15. Permittee represents and warrants that it has the authority to enter into this Agreement on behalf of itself and its successors and assigns, and this Agreement shall be binding upon Permittee's successors and assignees, as well as Permittee.

SECTION 4. Special Conditions

4.1. Geotechnical inspection and testing services shall be provided during pile installation and a report of those services shall be prepared by the engineer after construction is completed and submitted to the USACE.

Nothing in this Permission shall be construed as abrogating or otherwise diminishing the responsibility of the Requester to hold and save the Government free from all damages arising from construction, operation, maintenance, repair, rehabilitation, or replacement of the Federal Project and any alterations or modifications, including any alteration or modification approved herein, except to the extent caused by the fault or negligence of the United States or its contractors.

The parties hereto have caused this Agreement to be executed by and through their respective and duly authorized representatives on the day and year indicated below.

PERMITTEE: Ilan Israely

By: _____ Date: 1-5-2018

LOS ANGELES COUNTY FLOOD CONTROL DISTRICT, a body corporate and politic

By: _____ Date: 1/23/18