CORNERSTONE EARTH GROUP

Type of Services	**Soil and Soil Vapor Quality Evaluation And Soil Removal Work Plan**
Location	**1433 – 1493 El Camino Real Santa Clara, California**
Client	**Bayview Development Group, Inc.**
Client Address	**60 South Market Street, Suite 450 San Jose, California 95113**
Project Number	**958-1-5**
Date	**April 26, 2018**

Prepared by

Sarah D. Kuehn
Senior Staff Engineer

Peter Langtry
Senior Principal Geologist

PROFESSIONAL GEOLOGIST
PETER M. LANGTRY
PG-5920
EXP 1-31-2020
STATE OF CALIFORNIA

TABLE OF CONTENTS

FIGURES

DATA TABLES

APPENDICES

Type of Services	**Soil and Soil Vapor Quality Evaluation And soil Removal Work Plan**
Location	**1433 – 1493 El Camino Real Santa Clara, California**

SECTION 1: INTRODUCTION

This report presents the results of the Soil and Soil Vapor Evaluation performed at 1433-1493 El Camino Real in Santa Clara, California (Site) as shown on Figures 1 and 2. A work plan for removal of soil with residual petroleum hydrocarbons also is presented. This work was performed for Bayview Development Group, Inc. (1483 El Camino Properties LLC) in accordance with our July 18, 2017 Agreement (Agreement).

1.1 SITE DESCRIPTION

The approximately 1.7-acre site is located near the intersection of El Camino Real and Monroe Street in Santa Clara, California. The Site is currently developed with two auto repair shops, former market, former car wash, and a single-family residence. The rest of the Site is developed with appurtenant paved parking lot and landscape areas. The Site vicinity is primarily commercial land buildings and high density residential. We understand that 1483 El Camino Properties LLC owns the property and is planning a mixed-use development

1.2 PURPOSE

Based on the July 12, 2017 meeting with Santa Clara County Department of Environmental Health (County Health) staff, the purpose of this work was to perform additional soil sampling in the former underground storage tank (UST) area (described below) to determine the lateral and vertical extent of soil with petroleum hydrocarbons exceeding residential screening levels. The additional purpose was to evaluate soil vapor quality in the auto service areas and carwash areas. The results were used to prepare this soil removal work plan for submittal to County Health.

1.3 SCOPE OF WORK

The scope of work performed for this evaluation included the following:

- Drilling and logging 10 exploratory borings to depths of up to approximately 30 feet within and near the perimeter of the former UST excavation;
- Collection of 30 soil samples from the exploratory borings for laboratory analyses;

- Collection of 4 soil vapor samples from 4 temporary soil vapor probes for laboratory analyses;
- Preparation of this report, figures, and data tables, and Soil Removal Work Plan.

The limitations for this investigation are presented in Section 6.

SECTION 2: BACKGROUND

2.1 HISTORICAL SITE USAGE

Based on Cornerstone's May 2017 Phase I ESA, the Site was developed in the late 1800s with an apparent residence and associated out buildings as shown on the Sanborn map from 1891. By 1915, the structures had been removed and by 1939 the residence that exists today on the property was constructed. During the 1950s a reported "Fruit Drying" business was present on the southeastern portion of the Site. During the 1960s the car wash at 1483 El Camino Real and the structure at 1433 to 1463 El Camino Real were built. From 1966 until the present the majority of use for this building was primarily used auto-sales, auto upholstery, or automobile repair.

2.2 FORMER USTS

In 1995, three USTs and associated fuel pumps and piping were removed from the Site under county oversight. Two 10,000-gallon gasoline USTs were removed from the drive area west of the car wash building. A 300-gallon gasoline UST was removed from near the southwest corner of the car was building (Figure 3).

Laboratory analysis of one soil sample collected from the base of the 300-gallon UST pit and samples collected beneath the fuel dispensers reportedly did not detect petroleum hydrocarbons. Laboratory analyses of verification soil samples collected from beneath the two 10,000 gallon USTs, at depths of approximately 12 to 15 feet, detected up to 15 milligrams per kilogram (mg/kg) benzene, 340 mg/kg toluene, 290 mg/kg ethylbenzene, 1,500 mg/kg xylenes and 26,000 mg/kg total petroleum hydrocarbons as gasoline (TPHg). The current shallow soil direct exposure residential environmental screening levels (ESLs[1]) are 0.23 mg/kg for benzene, 970 mg/kg for toluene, 5.1 mg/kg for ethylbenzene, 560 mg/kg for xylenes, and 740 mg/kg for TPHg.

One ground water monitoring well, GX-64A, reportedly was installed in 1986 adjacent to the north of the two 10,000-gallon USTs (Figure 3). Five soil samples were collected from the GX-64A boring. Laboratory analyses reportedly detected up to 254 mg/kg TPHg. Laboratory analyses of ground water from GX-64A reportedly detected 3,000 micrograms per liter (µg/L) TPHg; concentrations of other gasoline constituents were not reported. Well GX-64A reportedly was sampled in September 1995, May 1997, December 1997, February 1999 and December 1999. TPHg, benzene, toluene ethylbenzene and xylene (BTEX) reportedly were not detected except in February 1999, when 2.1 µg/L benzene, 7.2 µg/L toluene, 1.6 µg/L ethylbenzene and 7.8 µg/L xylenes were detected.

[1] Environmental Screening Level (ESL), San Francisco Bay, Regional Water Quality Control Board, February 2016

In June 2000, two borings (SB-1 and SB-2) were advanced adjacent to the east of the former USTs (Figure 3). Soil samples and ground water grab samples were collected from the two borings, and laboratory analysis of soil samples did not detect TPHg, BTEX or Methyl tert-butyl ether (MTBE). Laboratory analysis of the ground water samples detected 1.9 µg/L of toluene; no other petroleum hydrocarbons were detected.

The Santa Clara Valley Water District (SCVWD) determined that the residual contamination detected beneath the Site did not pose a significant risk to human health or ground water and issued a case closure letter for the Site in 2000. The case closure letter is presented in Appendix A.

2.3 2017 PHASE II INVESTIGATION

In April 2017, Cornerstone staff conducted a Phase II Investigation of the Site including the collection of soil, soil vapor, and ground water samples (Cornerstone Earth Group, 2017). One exploratory boring, EB-1, was advanced through the former UST tank pit to evaluate the quality of the tank pit backfill, underlying native soil quality and ground water quality. Borings EB-2 and EB-3 were advanced to collect ground water grab samples up-gradient and down-gradient of the former on-site auto shop areas. Soil vapor probes were installed to a depth of approximately 5 feet at the locations of EB-1, EB-2 and EB-3. In addition, three shallow exploratory borings (SS-1, SS-2 and SS-3; Figure 3) were advanced within the vacant, unpaved area on the northern approximately half of the Site.

Elevated concentrations of TPHg and BTEX were detected in a native soil sample collected from beneath the UST excavation backfill (EB-1). Elevated concentrations of TPHd, TPHg, and BTEX also were detected in the ground water collected from the former UST location. Soil vapor at this location did not appear significantly impacted.

To evaluate the lateral extent of petroleum hydrocarbons detected in the EB-1 ground water grab sample (discussed below), ten additional borings (EB-4, EB-5, EB-6, EB-7, EB-8, EB-9, EB-10, EB-11, EB-12, and EB-13) were advanced to an approximate depth of 20 to 25 feet for the collection of ground water grab samples.

Detected metal concentrations across the site appeared consisted with published background concentrations. No organochlorine pesticides, including DDT compounds, were detected exceeding residential screening levels in near-surface soil, with the exception of dieldrin. Dieldrin was detected above the Tier 1 ESL (0.00017 mg/kg) at a concentration of 0.00368 mg/kg, but was below the direct exposure ESL of 0.038 mg/kg.

Based on laboratory analysis of ground water grab samples collected from the presumed down-gradient direction from the former USTs, the impacted ground water appears limited to the general area of the former USTs. No chlorinated volatile organic compounds (VOCs) were detected in the ground water grab samples except 1,2-dichloroethane (DCA) detected in 2 of 10 samples (maximum of 0.75 µg/L; ESL = 0.5 µg/L), 1,1-dichloropropene in 1 of 10 samples (no screening level established), and 1,2-dichorobenzene, 1,3-dichlorobenzene and 1,4-dichlorobenzene (maximum 0.26 µg/L) detected in 1 of 10 samples (Tier 1 ESLs of 5 µg/L to 14 µg/L).

Data tables from the April 2017 investigation are presented in Appendix B of this report.

2.4 SUBSURFACE MATERIALS AND GROUND WATER

Subsurface materials consisting of alternating layers of clayey sand and sandy clays were observed to a depth of 20 feet. Fill material within the tank backfill area extended up to 14 feet. A cross section of the fill material within the tank backfill area is depicted on Figure 4 of this report. Our lithologic observations are summarized in boring logs presented in Appendix C.

Ground water was generally encountered at a depth of approximately 12 to 15 feet below the ground surface. Based on information obtained from the Geotracker database for former fuel leak cases in the Site vicinity, ground water flow direction in the Site vicinity has been reported to the north to northeast.

SECTION 3: SUBSURFACE INVESTIGATION

3.1 EXPLORATORY BORINGS

On April 4, 2018, our field engineer, under oversight of a California Professional Geologist, directed a subsurface investigation and continuously logged 10 exploratory borings in general accordance with the Unified Soil Classification System (ASTM D-2487). The 10 exploratory borings (EB-14 through EB-23, Figure 2) were advanced to depths ranging from approximately 20 to 30 feet. The borings were advanced using a direct push drilling rig operated by Penecore Drilling, a C-57-licensed driller.

The direct push drilling rig was equipped with a Dual Wall Sampling System that is used to help reduce cross contamination between sampling intervals. The Dual Wall Sampler was comprised of two main components: an exterior steel casing and an inner sample barrel (Single Wall Sampler). The outer casing had a 2-inch outer diameter (OD) and a 1.5-inch inner diameter (ID). The sample barrel (Single Wall Sampler) was 5 feet in length with a 1.375-inch outside diameter (OD) and a 1-inch inner diameter (ID). The Dual Wall sample barrel was loaded with a 5-foot acetate liner and installed inside the outer casing. The outer drive casing and inner sample barrel were then hydraulically pushed to a depth of approximately 5 feet. As these tools were advanced, the inner sampling barrel collected the soil core sample. This sampler was then retrieved while the outer casing remained in place, protecting the integrity of the hole. A new sampler was lowered into place and advanced another 5 feet to collect the next soil sample. This process continued until a desired depth was reached. Boring EB-14 was advanced to 30 feet, borings EB-15 through EB-23 were advanced to 20 feet.

After sample collection, the borings were tremie grouted from the base of the boring through the casing as it is raised to the surface; no boring was left open overnight.

3.1.1 Organic Vapor Readings

Soil samples retrieved from the monitoring well borings were monitored with a MiniRAE 3000 Organic Vapor Meter (OVM) to record volatile organic compound (VOC) vapors. High OVM readings up to 1,439 part per million vapor [ppm_v] were recorded in soil samples collected from lower 10 feet (20 feet to 30 feet) in boring EB-14 and up to 840 ppm_v from 10 to 20 feet in borings EB-15 and EB-22. Low OVM readings (up to 12 ppm_v) were recorded in the upper 10 feet of soil in all 10 borings. OVM readings are listed on the boring logs presented in Appendix C.

3.2 SOIL SAMPLE COLLECTION AND LABORATORY ANALYSES

Three samples per boring were collected per the generalized sampling plan outlined in our proposal and based on field observations. A fourth sample was collected from each boring to be placed on hold at the laboratory; additional laboratory analysis was requested as needed based on analytical data received. The soil samples were collected in acetate liners from borings EB-14 through EB-23 for laboratory analyses. Ends of soil samples were covered in a Teflon film, fitted with plastic end caps, taped, and labeled with a unique sample identification number. Core-N-One® capsules (in triplicate) were used to sample and transport approximately 5 grams of undisturbed soil per capsule for VOC analysis. Samples for laboratory analyses were placed in an ice-chilled cooler and transported to a state-certified laboratory with chain of custody documentation.

The soil samples were analyzed for TPHd (EPA Test Method 8015B) and TPHg and volatile organic compounds (VOCs, EPA Test Method 8260) by a state certified analytical laboratory.

3.3 SOIL VAPOR SAMPLING AND LABORATORY ANALYSES

3.3.1 Soil Vapor Probe Installation

Cornerstone installed four soil vapor probes (SV-1 through SV-4) adjacent to (within 5 feet) apparent floor drains or clarifiers associated with the auto service areas and car wash. The temporary soil vapor probes were installed to depths of approximately 5 feet. The probes consisted of a porous stainless-steel expendable vapor tip and screen which was affixed to pre-cleaned stainless steel tubing. The probes were constructed by first placing approximately 3 to 6 inches of coarse (Monterey #3) sand into the bottom of the borehole. The stainless-steel tip and tubing was then lowered into the borehole via a tremie pipe. Additional sand was then placed in the borehole via tremie to create an approximately ¾ to 1-foot sand pack interval around the vapor tip. Approximately ½ foot of dry granular bentonite (Cetco #8) was placed on top of the sand pack. Hydrated granular bentonite (approximate mix of 50% water to bentonite) was then placed down-hole in less than ½ foot lifts to approximately just below the ground surface. The stainless-steel tubing was labeled designating depth of placement and capped utilizing a vapor tight Swagelok fitting or tube cap. Soil vapor probe construction details are presented in Appendix D.

3.3.2 Soil Vapor Sampling

At least 2 hours after probe installation, soil vapor purging and sampling activities were performed generally following the protocols presented in the July 2015 document entitled, *Advisory – Active Soil Gas Investigations*, prepared by the Department of Toxic Substances Control (DTSC) and the California Regional Water Quality Control Board, for the Los Angeles and San Francisco Region. The tubing emanating from the vapor points was affixed to a sample shut off valve in the “off” position and was allowed to equilibrate for a minimum of one day before purging and soil vapor sampling. A 167 milliliters-per-minute flow regulator with attached particulate filter was fitted to the shut off valve and the other end to a “T” fitting. One end of the “T” was connected to the sampling summa canister. The other end of the “T” was affixed to a digital vacuum gauge and a 6-liter summa canister utilized for purging.

A minimum 10-minute vacuum tightness test was performed on the manifold and connections by opening and closing the 6-liter purge summa canister valve and applying and monitoring a vacuum on the vacuum gauge. The sample shut-off valve on the downhole side of the sampling

manifold remained in the “off” position. When gauge vacuum was maintained for at least 10 minutes without any noticeable decrease (less than approximately 0.1 inches of mercury [Hg] for properly connected fittings), purging began. The downhole shut off valve was opened and at least three pore volumes were removed utilizing the purging SUMMA canister. The volume of vapor removed was verified by the calculated pressure drop in the SUMMA canister. The purge volume was calculated based on the length and inner diameter of the sampling probe, the connected sampling tubing and equipment, dry bentonite seal, and the borehole sand pack.

Isopropyl alcohol was utilized as a leak detection compound during sampling by applying 11 to 16 drops to cotton gauze and placing the moistened gauze near the borehole. Sampling began by opening the SUMMA canister valve. Immediately upon opening the sampling valve, a shroud was placed over and enclosed the atmosphere of the borehole and entire sampling train including all connections.

Sampling continued until the vacuum gauge indicated approximately 5 inches of Hg remaining. A data logging photoionization detector (PID) was utilized during sampling to monitor the atmosphere inside the shroud through a bulkhead fitting. The logged data (at minimum thirty [30] second intervals) was corrected to parts per million by volume isopropyl alcohol concentrations and utilized to evaluate the integrity of the sampling train.

To confirm the isopropyl alcohol atmosphere, one confirmation sample was collected from the shroud atmosphere, at probe location SV-3 through the sampling port of the PID. The confirmation sample was collected using a SUMMA connected to a flow controller within the shroud during sample collection and was analyzed for 2-proponal. All field data, including equilibrium time, purge volume calculations and leak check measurements were recorded.

The four soil vapor and one shroud atmosphere verification samples were submitted under standard chain of custody documentation to Torrent Laboratory Inc., an accredited laboratory in Milpitas, California for analysis of VOCs and TPHg by EPA Method TO-15. One air sample from the shroud atmosphere was also collected and analyzed for 2-proponal by EPA Method TO-15.

SECTION 4: SUMMARY OF ANALYTICAL DATA

4.1 ENVIRONMENTAL SCREENING CRITERIA

The soil analytical results were compared to residential direct exposure and Tier 1 ESLs. Soil vapor results were compared to the Tier 1 ESLs, which are based on the indoor air ESLs using an attenuation factor of 0.002 (1/500).

4.2 SUMMARY OF SOIL ANALYTICAL DATA

The soil analytical data are summarized in Table 1. The laboratory analytical reports are included in Appendix E. A summary of the results is presented below:

- Benzene was detected in 1 of the 33 samples analyzed [EB-14 (29.5-30)] at a concentration of 1.49 mg/kg, which is above both the direct exposure (0.23 mg/kg) and Tier 1 ESLs (0.044 mg/kg)

- Toluene was detected in 2 of the 33 samples analyzed [both from EB-22; EB-22 (16-16.5) and EB-22 (19.5-20)], at concentrations of 16.9 mg/kg and 0.0262 mg/kg, respectively. One sample exceeded the Tier 1 ESL (2.9 mg/kg) but was below the direct exposure (970 mg/kg).

- Ethylbenzene was detected in 4 of the 33 samples analyzed at concentrations ranging from 2.25 mg/kg to 14.8 mg/kg. Two detections exceeded both the direct exposure (5.1 mg/kg) and the Tier 1 ESLs (1.4 mg/kg).

- Tert-butyl alcohol (TBA) was detected in 19 of the 33 soil samples analyzed at concentrations ranging from 0.0535 mg/kg to 53 mg/kg. Sixteen of the samples contained concentrations above the Tier 1 ESL (0.075 mg/kg).

- 1,2,4-Trimethylbenzene was detected in 9 of the 33 soil samples analyzed at concentrations ranging from 0.033 mg/kg to 718 mg/kg. Screening criteria for 1,2,4-Trimethylbenzene is not established.

- 1,3,5-Trimethylbenzene was detected in 9 of the 33 samples analyzed at concentrations ranging from 1.82 mg/kg to 48.8 mg/kg. Screening criteria for 1,3,5-Trimethylbenzene is not established.

- 2-Butanone was detected in 2 of the 33 samples analyzed at concentrations of 27.5 mg/kg and 13 mg/kg, which are below the direct exposure ESL (31,000 mg/kg) but exceed the Tier 1 ESL (5.1 mg/kg).

- Isopropylbenzene was detected in 4 of the 33 samples analyzed at concentrations ranging from 0.0196 mg/kg to 1.82 mg/kg. Screening criteria for isopropylbenzene is not established.

- Naphthalene was detected in 4 of the 33 samples analyzed at concentrations ranging from 0.037 mg/kg to 3.05 mg/kg, which are below the direct exposure ESL (3.3 mg/kg) but exceed the Tier 1 ESL (0.033 mg/kg).

- n-butylbenzene was detected in 2 of the 33 samples analyzed at concentrations if 0.0154 mg/kg and 1.91 mg/kg. Screening criteria for n-butylbenzene is not established.

- n-propylbenzene was detected in 6 of the 33 samples analyzed at concentrations ranging from 0.124 mg/kg to 149 mg/kg. Screening criteria for n-propylbenzene is not established.

- m,p-xylene was detected in 7 of the 33 samples analyzed at concentrations ranging from 0.0963 mg/kg to 343 mg/kg. Four samples had concentrations detected above the Tier 1 ESL (2.3 mg/kg) but were below the direct exposure ESL (560 mg/kg).

- o-xylene was detected in 6 of the 33 samples analyzed at concentrations ranging from 0.0379 mg/kg to 136 mg/kg. Four of the detected concentrations were above the Tier 1 ESL (2.3 mg/kg) but were below the direct exposure ESL (560 mg/kg).

- TPHg was detected in 12 of the 33 samples analyzed at concentrations ranging from 0.896 mg/kg to 13,000 mg/kg. Six samples had detected concentrations above the Tier 1 ESL (100 mg/kg) and four exceeded the direct exposure ESL (740 mg/kg). Higher

concentrations were detected in samples collected nearest to the former UST excavation area, below fill material.

- TPHd was detected in 26 of the 31 samples analyzed at concentrations ranging from 2.0 mg/kg to 55.9 mg/kg. All detections were below the Tier 1 ESL (230 mg/kg).

4.3 SUMMARY OF SOIL VAPOR ANALYTICAL DATA

The soil vapor analytical data are summarized in Table 2, and the laboratory analytical reports are included in Appendix E. A summary of the results is presented below:

- Several VOCs were detected in the four soil vapor samples analyzed. However, no VOC concentrations were detected above their calculated residential screening criteria. Soil vapor results are discussed further in Section 5.3.

- TPHg was detected in the four samples analyzed, but at concentrations below the soil vapor ESL of 50,000 µg/m^3.

4.4 SOIL VAPOR SAMPLE INTEGRITY EVALUATION

Isopropyl alcohol (2-propanol, 91 percent) was utilized as a leak detection compound during sampling by applying approximately 11 to 16 drops to cotton gauze and placing the moistened gauze near the borehole beneath the shroud.

A PID was utilized during sampling to monitor the atmosphere inside the shroud through a bulk-head fitting. The data was recorded in field notes at approximate 1-minute intervals. The data was then averaged and converted to parts per million by volume isopropyl alcohol concentration and utilized to evaluate the integrity of the sampling train. Analyses of the 4 soil vapor samples collected from SV-1 detected 2-propoanol at a concentration of 17 µg/m^3; SV-2 through SV-4 did not detect 2-propanol above its laboratory reporting limit of 12 µg/m^3. This data indicates that the sample trains were sufficiently tight, and no significant leakage occurred.

To help confirm the sampling trains were sufficiently tight and the soil vapor data is representative of subsurface conditions, confirmation sample SV-3 (IPA) of the shroud atmosphere was collected from the exhaust port of the PID and into a 1-liter SUMMA canister during the collection of the soil vapor sample at probe location SV-3. Laboratory analyses of the shroud atmosphere sample detected 2-propanol at 100,000 µg/m^3 in SV-3 (IPA). Soil vapor soil vapor sampling field notes and soil vapor sample train leak test calculations are presented in Appendix D.

SECTION 5: NATURE AND EXTENT OF CONTAMINATION

5.1 GROUND WATER

Based on laboratory analyses of 13 ground water grab samples collected in April 2017, sampling of a ground water monitoring well located adjacent to the north of the former USTs from 1986 to 1999, and ground water grab sampling performed in 2000, petroleum impacted shallow ground water appears limited to the location of the former UST pit. The primary constituents of potential concern (COPC) detected in shallow ground water in the former UST pit are TPHg, TPHd and BTEX.

No chlorinated VOCs were detected in shallow ground water outside the former UST pit except 1,2-DCA detected in 2 of 10 samples (maximum of 0.75 µg/L; ESL = 0.5 µg/L), 1,1-dichloropropene in 1 of 10 samples (no screening level established), and 1,2-dichorobenzene, 1,3-dichlorobenzene and 1,4-dichlorobenzene (maximum 0.26 µg/L) detected in 1 of 10 samples (Tier 1 ESLs of 5 µg/L to 14 µg/L).

5.2 SOIL QUALITY

Based on laboratory analyses of soil samples collected in April 2017, soil does not appear significantly affected by former agricultural use.

The SCVWD issued a case closure letter for the Site in 2000 for the former USTs, noting the presence of soil with residual petroleum hydrocarbons but concluding that the soil does not present a significant risk to human health or ground water quality. Based on laboratory analyses of soil samples collected during this investigation, TPHg and BTEX were detected at concentrations exceeding both their respective Tier 1 ESLs and Residential Direct Exposure RSLs in the native material up to 15 feet below the excavation backfill and laterally up to approximately 5 to 10 feet surrounding the former UST area. Selected soil quality data is presented on the cross section on Figure 4. The primary COPC detected in soil from the former UST area are TPHg and BTEX.

Removal of soil that exceeds the residential ESLs above the shallow ground water is described in the Soil Removal Workplan (Section 6). Residual petroleum hydrocarbons detected in soil below the top of shallow ground water do not appear to be significantly impacting shallow ground water quality outside of the tank pit location and are expected to decrease over time due to natural degradation processes.

5.3 SOIL VAPOR QUALITY

Based on the analytical results, soil vapor at a depth of approximately 5 feet does not appear significantly impacted by the residual petroleum hydrocarbons detected in soil and ground water in the former UST area. The detected soil vapor concentrations were below their respective residential environmental screening criteria. The reported concentrations of compounds detected do not appear to pose a significant human health risk concern for future mixed-use redevelopment. Removal of soil above the shallow ground water, as discussed below, is expected to further reduce risk of vapor intrusion. Soil vapor sampling after completion of soil removal activities is recommended to determine whether vapor intrusion mitigation measures are appropriate in the former UST area.

With respect to soil vapor quality in the area of the former auto shops and car wash, the concentrations of PCE detected are significantly below the current residential ESL, but PCE detected in two of the samples slightly exceeded the anticipated upcoming revised Water Board ESL based on a 1/30 attenuation factor. The 1/30 attenuation factor is based on studies of existing buildings and is considered overly conservative for new construction. No PCE was detected in shallow ground water, so the PCE detected does not appear to be indicative of a significant release and may be associated with typical use of automotive maintenance products. No vapor mitigation measures appear to be required associated with the concentrations of PCE detected.

SECTION 6: SOIL REMOVAL WORKPLAN

6.1 SUMMARY OF APPROACH

For geotechnical purposes, the backfill of the former UST pit will require over-excavation and replacement with engineered fill. Based on laboratory analyses of soil samples collected from the former UST area, soil with residual petroleum hydrocarbons are expected to be encountered during these over-excavation activities.

The upper approximately 10 feet of the existing UST excavation backfill is anticipated to be acceptable for on-Site re-use. The excavation, stockpiling and sampling/analyses of this material is summarized below. Shallow ground water was encountered at a depth of approximately 12 to 15 feet below the ground surface. The former UST pit appears to be approximately 15 feet deep. As a conservative measure, and to remove additional contaminant mass, soil will be excavated into the top of the shallow ground water, up to a depth of approximately 20 feet. Ground water will be pumped from the open excavation for off-Site disposal.

The sidewalls will be sloped at approximately 1:1, which is expected to remove the soil with petroleum hydrocarbons detected in borings near the perimeter of the former excavation. The approximate location of the initial excavation area is shown on Figure 3.

6.2 RISK MANAGEMENT DURINGFORMER UST PIT OVER-EXCAVATION

This section presents the protocol to be followed during over-excavation of the former UST pit backfill, including worker training, construction impact mitigation measures, excavation de-watering (if needed), and soil management protocol.

6.2.1 Pre-Construction Planning and Notification

Prior to the start of any construction activity that involves below ground work, information regarding site risk management procedures (e.g. a copy of this workplan) will be provided to the contractors for their review and each contractor shall provide such information to its subcontractors.

6.2.2 Site-Specific Health and Safety Worker Requirements

A Health and Safety Plan (HSP) will be prepared by the Environmental Professional (EP) prior to implementation of this workplan that will provide general health and safety guidance during Site work. The HSP will intended for use by the EP personnel while on-Site. The HSP will not be intended for use by other on-Site contractors.

On-Site contractors performing subsurface activities that may encounter COPC will be required to develop their own Site specific HSP. Each contractor will be responsible for the health and safety of their own workers, including but not limited to preparation of their own injury and illness prevention plan (IIPP). The purpose of the HSP and IIPP is to provide general guidance regarding the work hazards that may be encountered during each phase of Site construction activities.

Contractors are also required to determine the requirements for worker training, based on the level of expected contact to soil and ground water associated with the contractor's activities and

locations. The HSP will contain provisions for limiting and monitoring chemical exposure to construction workers, chemical and non-chemical hazards, emergency procedures, and standard safety protocols. Depending upon known conditions, employees conducting earthwork activities at the Site may be required to complete a 40-hour HAZWOPER training course (29 CFR 1910.120 (e)), including respirator and personal protective equipment training.

6.2.3 Construction Impact Mitigation Measures

During construction, measures will be taken by contractors to minimize dust generation, storm water runoff and tracking of soil off-site. The construction impact mitigation measures are described below.

6.2.3.1 Property Control

Property control procedures will be implemented by the Contractor to control the flow of personnel, vehicles and materials in and out of the Site while working in contaminated materials. In addition, Site control measures will help control the spread of COPC from the Site.

The Site perimeter will be fenced by the Contractor. Access and egress will be controlled at selected locations. Signs will be posted by the Contractor instructing visitors to sign in at the project support areas located at all controlled Site entrances.

6.2.3.2 Equipment Decontamination

Soil will be removed from equipment and vehicles before leaving the site. Cleaning methods used may include dry methods, such as brushing, scraping, or vacuuming. If dry methods are not effective, wet methods, such as steam cleaning or pressure-washing, should be used. The contractor, however, will be required to contain, manage, and collect samples of the rinse water for analytical testing by a state certified laboratory prior to appropriate disposal.

Decontamination procedures will be developed and implemented by the construction contractor to minimize the possibility that equipment releases contaminated soil onto public roadways or to on-site areas containing “clean” cover materials or new paving.

6.2.3.3 Personal Protective Equipment

Personal Protective Equipment (PPE) and clothing are used to isolate workers from COPC and physical hazardous. The minimum level of protection for workers coming into direct contact with contaminated materials is Level D:

1) Coveralls or similar clothing.
2) Reflective safety vests
3) Work gloves, as necessary
4) Steel-toed boots
5) Safety glasses, as necessary
6) Hard hat
7) Hearing protection, as necessary
8) Respirator during excavation and loading of NOA-containing soil.

6.2.3.4 Track-out Prevention

Any track-out on a paved public road at any location where vehicles exit the work Site will be cleaned by using wet sweeping or a HEPA filter equipped vacuum device by the end of each work day. Dry sweeping of paved roadways will be prohibited.

The following track-out prevention measure will be utilized at the Site entrance/exit by on-Site contractors:

- A gravel pad near the Site exit for vehicle decontamination.

The following additional track-out measures may be implemented at the Site by the on-Site contractors:

- A tire shaker; and
- A wheel wash system.

6.2.3.5 Storm Water Pollution Controls

A storm water pollution prevention plan (SWPPP) will be prepared by the Civil Engineer of Record. Storm water pollution controls will be based on best management practices (BMPs), such as those described in “Information on Erosion and Sediment Control for Construction Projects: A Guidebook” (Water Board 1998) and “Erosion and Sediment Control Field Manual”, Third Edition (Water Board 1999). Sediment and erosion control procedures may include, but are not limited to the following:

- Constructing temporary berms or erecting silt fences around exposed soil;
- Placing straw bale barriers or sediment traps around catch basins or other entrances to storm drains;
- Covering soil stockpiles with plastic sheeting or tarps during rainfall events; and
- Implementing other appropriate BMPs.

6.2.3.6 Observation of Excavation Activities

The environmental professional (EP) will observe the on-Site excavation activities on a full- to part-time basis during over-excavation of the former UST pit backfill. In the event that unexpected suspect soil conditions are identified through visual or olfactory observations or if field screening using an organic vapor meter (OVM) identifies potentially contaminated soils that are not anticipated, work will be halted in the area of suspect materials. If an unexpected area of suspected impact is observed, the area will be cordoned off using delineators and caution tape, or similar materials. If additional soil management protocols are recommended to be implemented by the EP and/or required by County Health, these measures will be conducted in accordance with the procedures identified in Section 6.3.

6.2.3.7 Odor Controls

If nuisance odors are present during excavation activities that are associated with the soil, measures will be implemented to reduce the odors. These include limiting the amount of soil

disturbance, to the amount practical, and applying water or non-toxic odor/vapor suppressant to the soil during excavation activities. In addition, soil that is causing a nuisance odor will be covered with a layer of clean soil or plastic sheeting at the end of the work day.

6.3 SOIL MANAGEMENT PROTOCOLS

6.3.1 Management of Excavated Soils

Soil excavated during the UST over-excavation activities will be evaluated for potential on-Site reuse and off-Site disposal alternatives. Stockpiling and sampling protocols are presented below.

6.3.2 Soil Stockpiling Procedures

Stockpiled soil that is presumed “clean” and/or suspected to be contaminated shall be placed on-Site on top of and covered by an “impermeable” liner (6 mil) to reduce infiltration by rainwater and contamination of underlying soil. “Clean” soil shall be stockpiled separately from suspect soil. If the stockpile is located on pavement or concrete, then a liner is not required beneath the pile. If a stockpile shall remain on-Site greater than 48 hours, sandbags shall be placed around the stockpile to secure the plastic sheeting. While remaining on-Site, stockpiles shall be checked daily to verify that they are adequately covered.

6.3.3 Verification Sampling

Verification sampling will be performed at the UST over-excavation sidewalls to document that that soil exceeding residential direct exposure ESLs has been removed. Verification samples will be collected at a frequency of one sidewall sample per approximately 50 linear feet of excavation sidewall near the top of the shallow ground water. No samples will be collected from the excavation base. . These samples will be analyzed for VOCs and TPHg (EPA Test Method 8260B). The detected concentrations will be compared to the residential screening criteria (direct exposure ESLs). If any constituents are detected at concentrations above their respective residential screening criteria, the excavation will be expanded, and new verification samples will be collected.

6.3.4 Stockpile Sampling

Samples will be collected from stockpiled soil to determine off-Site reuse or disposal alternatives. For soil that appears acceptable for on-Site re-use (e.g. soil from the upper 10 feet of the UST excavation backfill), one discrete soil sample will be collected for each approximately 100 cubic yards of stockpiled soil. These samples will be submitted to a state certified laboratory and analyzed for TPHd (EPA Test Method 8015M with silica gel cleanup), TPHg and VOCs (EPA Test Method 8260). If laboratory analytical results are below Tier 1 ESLs, the soil may be re-used on-Site as engineered fill. Otherwise, the soil will be removed for appropriate off-Site disposal.

Soil that does not appear acceptable for on-Site re-use, based on odors, discoloration and/or OVM readings, will be sampled to determine off-Site disposal alternatives. One 4-point composite sample will be collected for each approximately 500 cubic yards of soil and submitted to a state certified laboratory and analyzed for CAM 17 Metals (EPA Test Method 6000/7000), TPHd and TPHo (EPA Test Method 8015M with silica gel cleanup), TPHg and VOCs (EPA Test Method 8260), PAHs (EPA Test Method 8270 SIM), and PCBs (EPA Test Method 8082). If

metal concentrations are detected at concentrations exceeding 10 times the soluble threshold limit concentration (STLC), then those samples will be analyzed for soluble analysis using STLC extraction techniques to determine if the soil is a hazardous waste with respect to California regulations (California Code of Regulations (CCR) Title 22 Section 66261.24).

The contractor will be responsible for transmitting the data to the selected receiving facility and will prepare any required manifests prior to disposal. Any on-Site reuse of excavated soil will be approved by County Health prior to use.

6.3.5 Soil Sampling Protocols

Soil samples will be collected in pre-cleaned new stainless steel liners. The ends of liners will be covered with Teflon film, fitted with plastic end caps, taped, and labeled with a unique identification number. Samples collected for volatile organic compound (VOC) analysis will be collected in three 5-gram Core-N-One capsules. The samples then will be placed in an ice-chilled cooler and transported to a state-certified analytical laboratory with chain of custody documentation. Sampling equipment will be cleaned with laboratory grade detergent and rinsed or steam cleaned between sample points.

6.3.6 Field Documentation

The EP's field geologist or engineer will be present part to full time during excavation activities. For each day that the EP's field geologist or engineer is observing Site activities, a field report will be prepared summarizing activities, results of dust monitoring and our observations.

Chain-of-custody records are used to document sample collection and shipment to the laboratory for analysis. All sample shipments for analyses will be accompanied by a chain-of-custody record. Form(s) will be completed and sent with the samples for each laboratory and each shipment. If multiple coolers are sent to a single laboratory on a single day, chain-of-custody form(s) will be completed and sent with the samples for each cooler. The chain-of-custody record will identify the contents of each shipment and maintain the custodial integrity of the samples. Generally, a sample is considered to be in someone's custody if it is either in someone's physical possession, in someone's view, locked up, or kept in a secured area that is restricted to authorized personnel. Until receipt by the laboratory, the custody of the samples will be the responsibility of the sample collector.

Photographs will be periodically taken by the EP's field geologist or engineer to help document information entered in the daily field report, and to document the soil verification sampling locations. When a photograph is taken, the following information will be written in the daily field report:

- Time, date, location, and, if appropriate, weather conditions
- Description of the subject photographed
- Name of person taking the photograph

6.3.7 Excavation De-Watering

Prior to backfilling the excavation, ponded water will be pumped from the excavation into portable holding tanks. Up to 60,000 gallons of water will be pumped from the excavation. The water will be transported off-Site for appropriate disposal or recycling using tanker trucks. For disposal/recycling acceptance, one sample of water will be collected from the ponded water and

analyzed for TPHd and TPHo (EPA Test Method 8015M with silica gel cleanup), TPHg and VOCs (EPA Test Method 8260).

6.3.8 Excavation Backfilling

The base of the excavation is expected to extend into the top of the shallow ground water. Crushed rock or drain rock will be placed at the base of the excavation and covered with a geotextile. On-Site soil that has been approved for on-Site re-use and/or imported soil that meets residential use criteria will be used to backfill the excavation. Soil will be placed and compacted in accordance with the project geotechnical engineer's recommendations.

If imported soil is required for Site grading, the import source will be required to provide documentation regarding the source and quality of imported soil. The DTSC's October 2001 Clean Fill Advisory provides useful guidance on evaluating imported fill.

6.4 WASTE MANIFEST AND DISPOSAL DOCUMENTATION

The contractor will be responsible for transmitting the analytical data and soil profile information to the selected disposal facility. The contractor will prepare the appropriate manifests and/or other paperwork prior to disposal. Disposal documentation will be maintained by the contractor and will be transmitted to the EP for inclusion in the Completion Report discussed in Section 6.

6.5 CONTINGENCY PROCEDURES

Unexpected potentially hazardous materials may be encountered during excavation activities. These materials include, but are not limited to, undocumented subsurface structures, piping, sumps, septic tanks, and isolated areas of suspected soil contamination. If unexpected subsurface conditions are encountered, the following procedures shall be implemented:

- The work shall stop, and the area shall be secured to prevent unauthorized entry and to prevent the spread of contamination. If the situation appears to be immediately dangerous to life or health (e.g., ruptured gas line), all work shall stop on-Site, the Site shall be evacuated, and the appropriate notifications shall be made in accordance with the Contractor's procedures.

- The Site supervisor, EP, and property owner shall be notified. The unexpected subsurface condition will be inspected by the appropriate personnel.

- County Health will be notified of the unexpected condition encountered.

If an unexpected UST and/or associated piping is encountered, County Health and the San Jose Fire Department will be notified, and the appropriate permit will be obtained prior to removal.

6.6 DUST CONTROL AND MONITORING

Construction operations will be conducted to minimize the creation and dispersion of dust including the following measures:

- Limit on-Site vehicle speed to approximately 15 miles per hour or less as needed to minimize visible dust generation;

- Apply water to the areas to be excavated and/or graded, and continue watering throughout the grading and/or excavation activities to minimize visible dust generation;
- Perimeter fencing will be installed with windscreens;
- Suspend excavation/grading activities when wind speeds are high enough to result in visible dust emissions (e.g., two gusts of greater than 25 miles per hour within 30 minutes);
- Keep soil stockpiles adequately wetted or covered when not in use and at the end of each work day;
- Minimizing the amount of excavated material or waste materials stored at the Site;
- When loading trucks for removal of excavated material, the material shall not extend above the walls or back of the truck bed. The load must be tightly covered with a tarp or other effective cover for all trucks hauling soil, sand, and other loose materials before the trucks leave the loading area. If needed, the materials will be wetted prior to covering.

Additional dust control measures may be identified and implemented by contractors, as necessary, especially if dry and windy conditions persist during periods of earthwork.

During excavation activities the EP will set up a minimum of three dust monitors to document airborne concentrations at upwind and downwind Site boundaries. The monitoring will be performed using DataRAM PDR-1000 particulate monitors or their equivalent. The locations of the meters will be determined by the field geologist or engineer in the field. The wind direction and time of observation will be recorded in the field and the sampling location will be modified during the day if significant changes in wind direction are readily observed. The particulate meters will be monitored by the field geologist or engineer to evaluate if excessive dust is migrating off-Site. Each time the meters are checked, the differences between the average upwind dust concentration and the average downwind concentrations will be compared to the ambient air quality standard of 150 micrograms per cubic meter over an averaging time of 8-hours for respirable dust. If this standard is exceeded, increased dust control measures will be implemented. Results of the air monitoring will be summarized in a completion report.

6.7 SOIL REMOVAL COMPLETION REPORT

We will prepare a report summarizing the soil removal activities, presenting analytical results of verification sampling and soil disposal documentation.

SECTION 7: LIMITATIONS

Cornerstone performed this investigation to support Bayview Development Group, Inc.in evaluation of soil, soil vapor, and ground water quality beneath the Site. Bayview Development Group, Inc. understands that the extent of soil, soil vapor and ground water data obtained is based on the reasonable limits of time and budgetary constraints. In addition, the chemical information presented in this report can change over time and is only valid at the time of this investigation and for the locations sampled.

This report, an instrument of professional service, was prepared for the sole use of Bayview Development Group, Inc. and may not be reproduced or distributed without written authorization from Cornerstone.

Cornerstone makes no warranty, expressed or implied, except that our services have been performed in accordance with the environmental principles generally accepted at this time and location.

SECTION 8: REFERENCES

CalEPA/DTSC. July 2015. *Advisory Active Soil Gas Investigations*

Cornerstone Earth Group. May 8, 2017. Phase I Environmental Site Assessment and Preliminary Soil, Soil Vapor and Ground Water Quality Evaluation, 1433-1493 El Camino Real, Santa Clara, California.

DTSC. October 2011. *Final Guidance for the Evaluation and Mitigation of Subsurface Vapor Intrusion to Indoor Air (Vapor Intrusion Guidance), Department of Toxic Substances Control and California Environmental Protection Agency.*

DTSC, Office of Human and Ecological Risk (HERO). August 2017. *HERO HHRA Note Number 3*

San Francisco Bay, Regional Water Quality Control Board. Revised February 2016. Environmental Screening Levels.

State Water Resource Control Board. September 2017. *Maximum Contaminant Levels (MCLs).*

U.S. EPA. Revised June 2017. *Regional Screening Level (RSL) Summary Table.*

CORNERSTONE EARTH GROUP

FIGURES

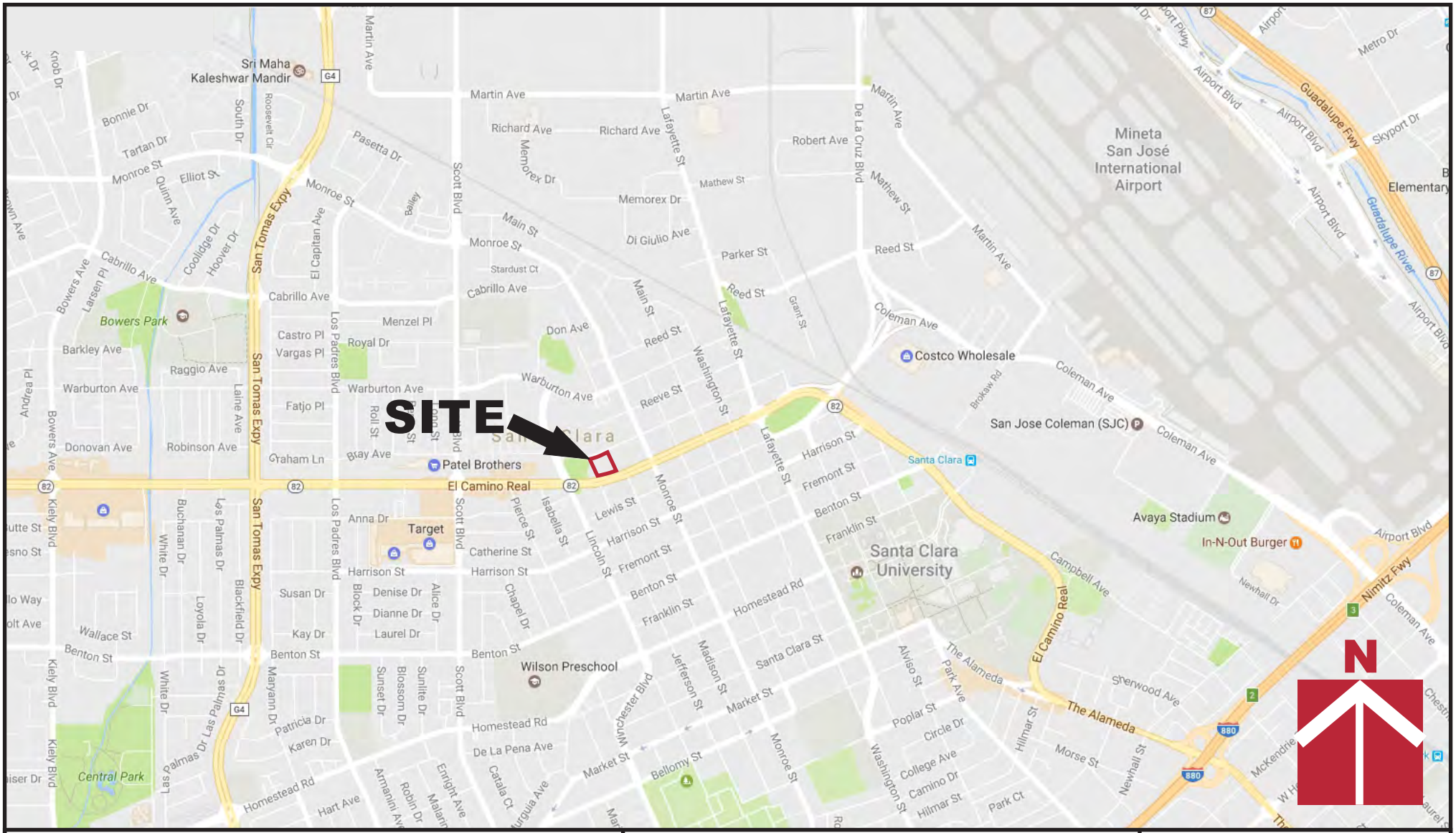

CORNERSTONE EARTH GROUP

Vicinity Map

1433 to 1493 El Camino Real
Santa Clara, CA

Project Number	958-1-5
Figure Number	Figure 1
Date	April 2018
Drawn By	RRN

Base by Google Earth, dated 4/15/2017

Project Number	958-1-5
Figure Number	Figure 2
Date	April 2018
Drawn By	RRN

Site Plan

1433 to 1493 El Camino Real
Santa Clara, CA

CORNERSTONE EARTH GROUP

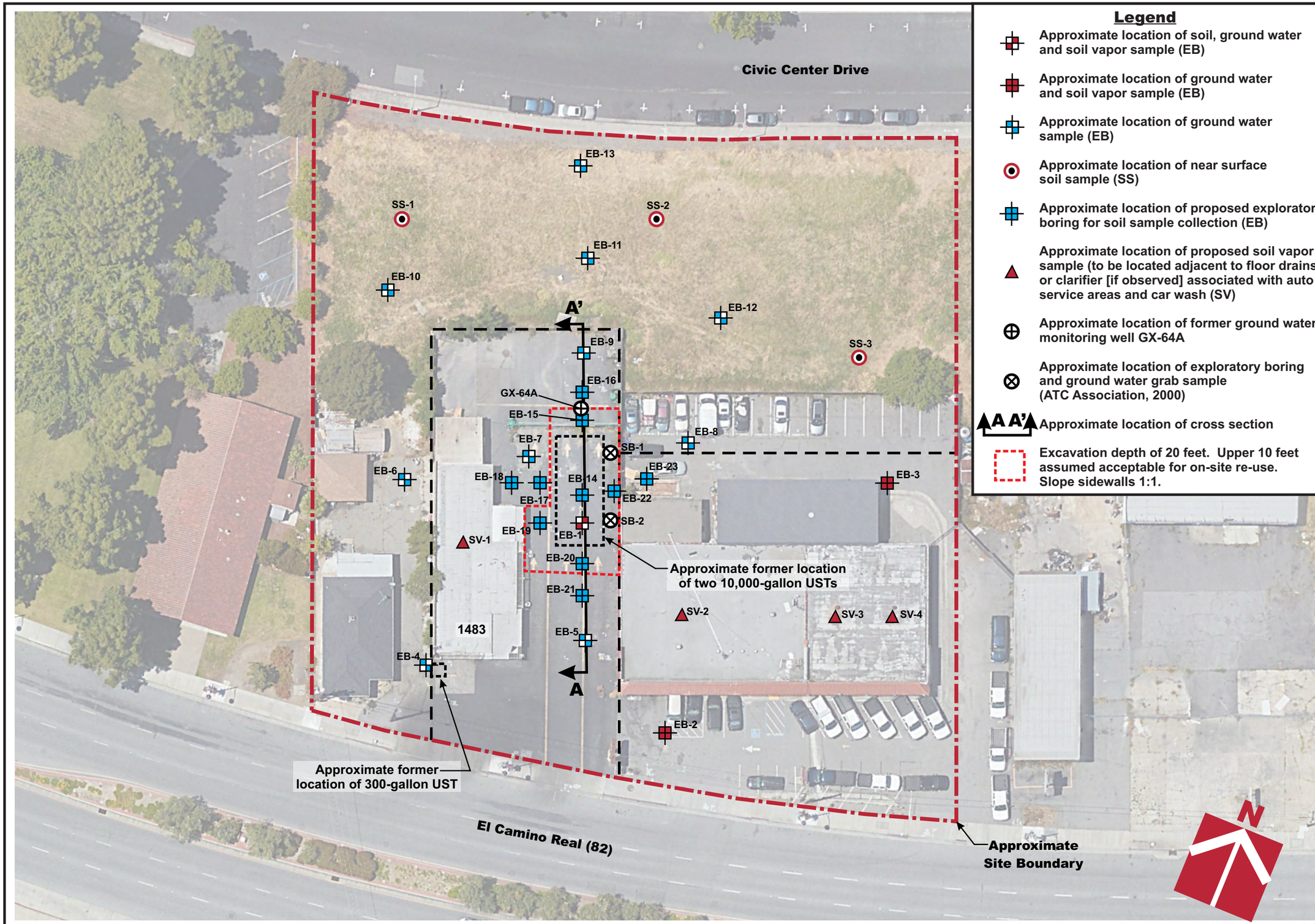

Base by Google Earth, dated 4/15/2017

Legend

- Approximate location of soil, ground water and soil vapor sample (EB)
- Approximate location of ground water and soil vapor sample (EB)
- Approximate location of ground water sample (EB)
- Approximate location of near surface soil sample (SS)
- Approximate location of proposed exploratory boring for soil sample collection (EB)
- Approximate location of proposed soil vapor sample (to be located adjacent to floor drains or clarifier [if observed] associated with auto service areas and car wash (SV)
- Approximate location of former ground water monitoring well GX-64A
- Approximate location of exploratory boring and ground water grab sample (ATC Association, 2000)
- A A' Approximate location of cross section
- Excavation depth of 20 feet. Upper 10 feet assumed acceptable for on-site re-use. Slope sidewalls 1:1.

Project Number	958-1-5
Figure Number	Figure 3
Date	April 2018
Drawn By	RRN

Boring Location Plan

1433 to 1493 El Camino Real
Santa Clara, CA

CORNERSTONE EARTH GROUP

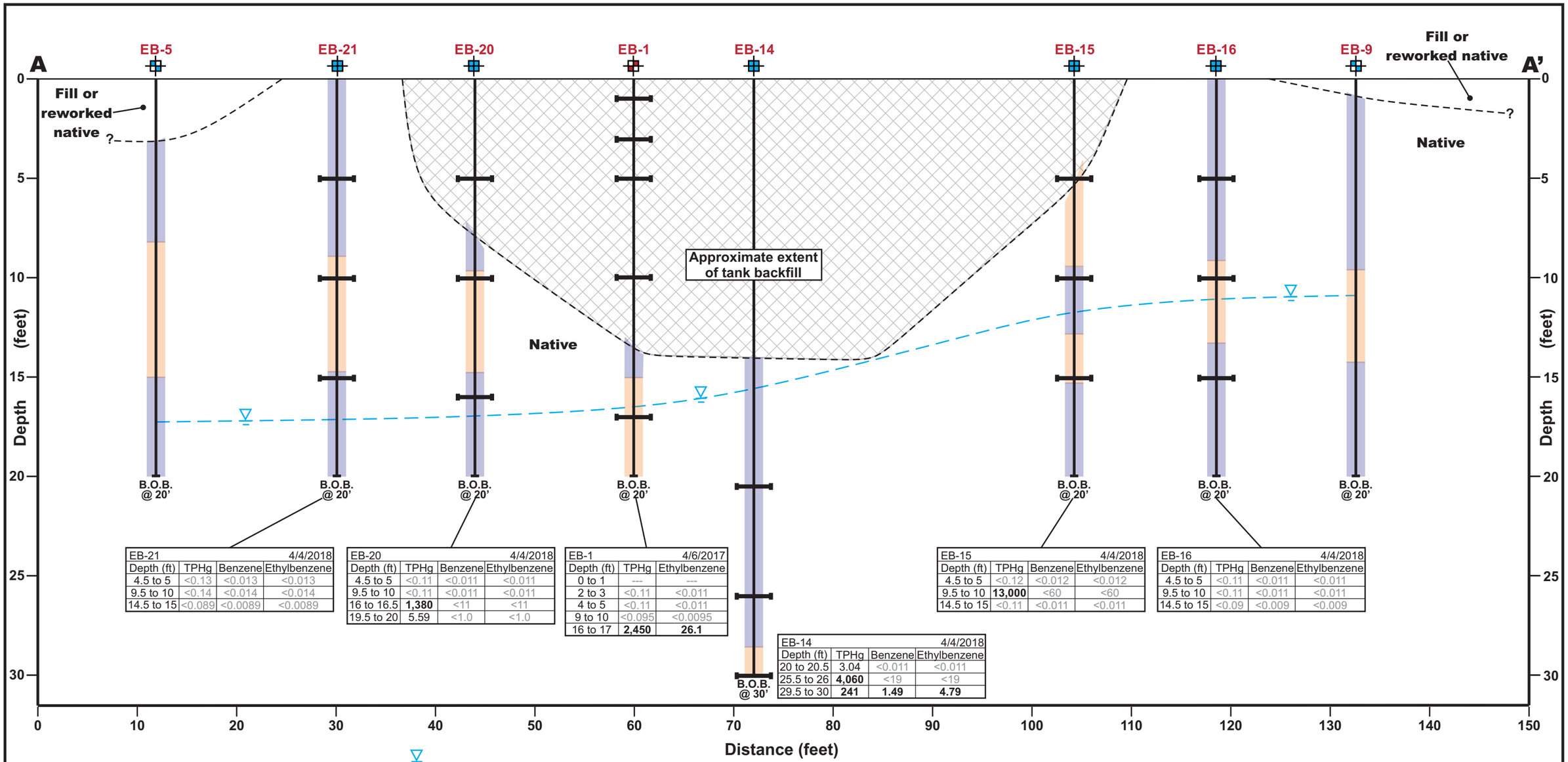

EB-21			4/4/2018
Depth (ft)	TPHg	Benzene	Ethylbenzene
4.5 to 5	<0.13	<0.013	<0.013
9.5 to 10	<0.14	<0.014	<0.014
14.5 to 15	<0.089	<0.0089	<0.0089

EB-20			4/4/2018
Depth (ft)	TPHg	Benzene	Ethylbenzene
4.5 to 5	<0.11	<0.011	<0.011
9.5 to 10	<0.11	<0.011	<0.011
16 to 16.5	**1,380**	<11	<11
19.5 to 20	5.59	<1.0	<1.0

EB-1		4/6/2017
Depth (ft)	TPHg	Ethylbenzene
0 to 1	---	---
2 to 3	<0.11	<0.011
4 to 5	<0.11	<0.011
9 to 10	<0.095	<0.0095
16 to 17	**2,450**	**26.1**

EB-14			4/4/2018
Depth (ft)	TPHg	Benzene	Ethylbenzene
20 to 20.5	3.04	<0.011	<0.011
25.5 to 26	**4,060**	<19	<19
29.5 to 30	**241**	**1.49**	**4.79**

EB-15			4/4/2018
Depth (ft)	TPHg	Benzene	Ethylbenzene
4.5 to 5	<0.12	<0.012	<0.012
9.5 to 10	**13,000**	<60	<60
14.5 to 15	<0.11	<0.011	<0.011

EB-16			4/4/2018
Depth (ft)	TPHg	Benzene	Ethylbenzene
4.5 to 5	<0.11	<0.011	<0.011
9.5 to 10	<0.11	<0.011	<0.011
14.5 to 15	<0.09	<0.009	<0.009

Symbols

- Approximate location of soil, ground water and soil vapor sample (EB)
- Approximate location of ground water sample (EB)
- Approximate location of proposed exploratory boring for soil sample collection (EB)
- Approximate ground water elevation
- Approximate location of sample interval
- Predominantly clayey layers
- Predominantly sandy layers

Section A-A'

(View Looking Southwest)
1"=10' Horizontal
1"=5' Vertical

Screening Levels

	ESL [1] - Tier
TPHg (gasoline)	**100**
Benzene	**0.044**
Ethylbenzene	**1.4**

Concentrations measured in mg/kg

[1] Environmental Screening Level (ESL), RWQCB, San Francisco Bay Region - February 2016

< Not detected at or above laboratory reporting limit

--- Not Analyzed

BOLD Concentration exceeds selected environmental screening criteria

Notes:
1) Surficial fills associated with existing pavements, landscaping or utilities are not shown.
2) The subsurface profile is conceptual and is based on limited subsurface data obtained from widely spaced borings. Actual subsurface conditions may vary significantly between borings.
3) See Figure 3 for location of cross section.

CORNERSTONE EARTH GROUP

Geologic Cross Section A-A'

1433 to 1493 El Camino Real
Santa Clara, CA

Project Number: 958-1-5

Figure Number: Figure 4

Date: April 2018

Drawn By: RRN

CORNERSTONE EARTH GROUP

DATA SUMMARY TABLES

CORNERSTONE EARTH GROUP

Table 1. Analytical Results of Selected Soil Samples
(Concentrations in mg/kg)

Boring ID	Sample ID	Date	Depth (feet)	Benzene	Toluene	Ethylbenzene	TBA	1,2,4-Trimethylbenzene	1,3,5-Trimethylbenzene	2-Butanone (MEK)	Isopropylbenzene	Naphthalene	n-Butylbenzene	n-Propylbenzene	m,p-xylene	o-xylene	TPHg	TPHd
EB-14	EB-14 (20-20.5)	4/4/2018	20-20½	<0.011	<0.011	<0.011	<0.057	<0.011	<0.011	<0.011	0.0327	0.037	0.0154	0.124	<0.011	<0.011	3.04	7.02
	EB-14 (25.5-26)	4/4/2018	25½-26	<19	<19	<19	<97	158	48.8	<19	<19	<19	<19	38	221	<19	**4,060**	18.6
	EB-14 (29.5-30)	4/4/2018	29½-30	**1.49**	<0.96	4.79	**5.35**	11	3.03	<0.96	<0.96	2.62	<0.96	2.23	17.2	5.4	241	15.9
EB-15	EB-15 (4.5-5)	4/4/2018	4½-5	<0.012	<0.012	<0.012	**0.406**	<0.012	<0.012	<0.012	<0.012	<0.012	<0.012	<0.012	<0.012	<0.012	<0.12	2.84
	EB-15 (9.5-10)	4/4/2018	9½-10	<60	<60	<60	<300	718	204	<60	<60	<60	<60	149	343	136	**13,000**	27
	EB-15 (14.5-15)	4/4/2018	14½-15	<0.011	<0.011	<0.011	**0.244**	<0.011	<0.011	<0.011	<0.011	<0.011	<0.011	<0.011	<0.011	<0.011	<0.11	3.07
EB-16	EB-16 (4.5-5)	4/4/2018	4½-5	<0.011	<0.011	<0.011	**0.206**	<0.011	<0.011	<0.011	<0.011	<0.011	<0.011	<0.011	<0.011	<0.011	<0.11	4.61
	EB-16 (9.5-10)	4/4/2018	9½-10	<0.011	<0.011	<0.011	**0.215**	<0.011	<0.011	<0.011	<0.011	<0.011	<0.011	<0.011	<0.011	<0.011	<0.11	<2.0
	EB-16 (14.5-15)	4/4/2018	14½-15	<0.009	<0.009	<0.009	<0.045	<0.009	<0.009	<0.009	<0.009	<0.009	<0.009	<0.009	<0.009	<0.009	<0.09	13.8
EB-17	EB-17 (4.5-5)	4/4/2018	4½-5	<0.01	<0.01	<0.01	**0.498**	<0.01	<0.01	<0.01	<0.01	<0.01	<0.01	<0.01	<0.010	<0.01	<0.1	2.33
	EB-17 (9.5-10)	4/4/2018	9½-10	<0.012	<0.012	<0.012	**0.174**	<0.012	<0.012	<0.012	<0.012	<0.012	<0.012	<0.012	<0.012	<0.012	<0.12	2.21
	EB-17 (14.5-15)	4/4/2018	14½-15	<0.011	<0.011	<0.011	0.0535	<0.011	<0.011	<0.011	<0.011	<0.011	<0.011	<0.011	<0.011	<0.011	0.947	35.1
EB-18	EB-18 (4.5-5)	4/4/2018	4½-5	<0.0092	<0.0092	<0.0092	0.0573	<0.0092	<0.0092	<0.0092	<0.0092	<0.0092	<0.0092	<0.0092	<0.0092	<0.0092	<0.092	2
	EB-18 (9.5-10)	4/4/2018	9½-10	<0.0091	<0.0091	<0.0091	0.0675	<0.0091	<0.0091	<0.0091	<0.0091	<0.0091	<0.0091	<0.0091	<0.0091	<0.0091	<0.091	<2.0
	EB-18 (14.5-15)	4/4/2018	14½-15	<0.0099	<0.0099	<0.0099	<0.05	<0.0099	<0.0099	<0.0099	<0.0099	<0.0099	<0.0099	<0.0099	<0.0099	<0.0099	<0.099	3.05
EB-19	EB-19 (4.5-5)	4/4/2018	4½-5	<0.011	<0.011	<0.011	**0.332**	<0.011	<0.011	<0.011	<0.011	<0.011	<0.011	<0.011	<0.011	<0.011	<0.11	<2.0
	EB-19 (9.5-10)	4/4/2018	9½-10	<0.013	<0.013	<0.013	**0.122**	<0.013	<0.013	<0.013	<0.013	<0.013	<0.013	<0.013	<0.013	<0.013	<0.11	<2.0
	EB-19 (16.5-17)	4/4/2018	16½-17	<0.95	<0.95	**6.05**	<4.8	15.5	4.39	<0.95	1.03	2.71	<0.95	3.21	14.3	6.12	316	42.5
	EB-19 (19.5-20)	4/4/2018	19½-20	<1.3	<1.3	2.25	<6.5	1.91	1.82	<1.3	<1.3	<1.3	<1.3	<1.3	8.67	3.79	20.2	---
EB-20	EB-20 (4.5-5)	4/4/2018	4½-5	<0.011	<0.011	<0.011	**0.344**	<0.011	<0.011	<0.011	<0.011	<0.011	<0.011	<0.011	<0.011	<0.011	<0.11	<2.0
	EB-20 (9.5-10)	4/4/2018	9½-10	<0.011	<0.011	<0.011	**0.31**	<0.011	<0.011	<0.011	<0.011	<0.011	<0.011	<0.011	<0.011	<0.011	<0.11	2.31
	EB-20 (16-16.5)	4/4/2018	16-16½	<11	<11	<11	**53**	49.3	15.2	27.5	<11	<11	<11	<11	<11	<11	**1,380**	9.81
	EB-20 (19.5-20)	4/4/2018	19½-20	<1	<1	<1	<5	<1	<1	<1	<1	<1	<1	<1	<1	<1	5.59	2
EB-21	EB-21 (4.5-5)	4/4/2018	4½-5	<0.013	<0.013	<0.013	<0.063	<0.013	<0.013	<0.013	<0.013	<0.013	<0.013	<0.013	<0.013	<0.013	<0.13	4.38
	EB-21 (9.5-10)	4/4/2018	9½-10	<0.014	<0.014	<0.014	<0.068	<0.014	<0.014	<0.014	<0.014	<0.014	<0.014	<0.014	<0.014	<0.014	<0.14	2.15
	EB-21 (14.5-15)	4/4/2018	14½-15	<0.0089	<0.0089	<0.0089	<0.044	<0.0089	<0.0089	<0.0089	<0.0089	<0.0089	<0.0089	<0.0089	<0.0089	<0.0089	<0.089	5.98
EB-22	EB-22 (4.5-5)	4/4/2018	4½-5	<0.015	<0.015	<0.015	**0.422**	<0.015	<0.015	<0.015	<0.015	<0.015	<0.015	<0.015	<0.015	<0.015	<0.15	2.97
	EB-22 (9.5-10)	4/4/2018	9½-10	<1	<1	<1	<5	3.13	<1	<1	<1	<1	<1	<1	<1	<1	47.5	30.5
	EB-22 (16-16.5)	4/4/2018	16-16½	<1.1	16.8	**14.8**	<5.4	28.7	7.88	13	1.82	3.05	1.91	5.98	48.5	22.3	**943**	55.9
	EB-22 (19.5-20)	4/4/2018	19½-20	<0.012	0.0262	<0.012	<0.060	0.033	<0.012	<0.012	0.0196	<0.012	<0.012	<0.029	0.0963	0.0379	0.896	---
EB-23	EB-23 (4.5-5)	4/4/2018	4½-5	<0.011	<0.011	<0.011	**0.0878**	<0.011	<0.011	<0.011	<0.011	<0.011	<0.011	<0.011	<0.011	<0.011	<0.11	2.38
	EB-23 (9.5-10)	4/4/2018	9½-10	<0.011	<0.011	<0.011	**0.136**	<0.011	<0.011	<0.011	<0.011	<0.011	<0.011	<0.011	<0.011	<0.011	<0.11	2.88
	EB-23 (14.5-15)	4/4/2018	14½-15	<0.009	<0.009	<0.009	**0.09**	<0.009	<0.009	<0.009	<0.009	<0.009	<0.009	<0.009	<0.009	<0.009	<0.09	2.46
Residential Direct Exposure[1]				0.23	970	5.1	NE	NE	NE	31,000	NE	3.3	NE	NE	560	560	740	230
Tier 1 ESL[2]				0.044	2.9	1.4	0.075	NE	NE	5.1	NE	0.033	NE	NE	2.3	2.3	100	230

1 Residential Direct Exposure Environmental Screening Level (ESL), RWQCB, San Francisco Bay Region - February 2016
2 Residential Tier 1 ESL, RWQCB, San Francisco Bay Region - February 2016.
< Not detected at or above laboratory reporting limit
NE Not Established
BOLD Concentration exceeds both the Tier 1 ESL and direct exposure ESL

CORNERSTONE EARTH GROUP

Table 2. Analytical Results of Selected Soil Vapor Samples
(Concentrations in µg/m³)

Sample ID	Date	Depth (feet)	Toluene	1,1,1-TCA	2-Butanone (MEK)	Dichlorodifluoromethane	Isopropanol	PCE	TPHg
SV-1	4/6/2018	5	3.8	<2.7	1.8	2.5	17	7.5	851
SV-2	4/6/2018	5	<1.9	28	<1.5	<2.5	<12	16	283
SV-3	4/6/2018	5	<1.9	17	1.5	<2.5	<12	18	829
SV-4	4/6/2018	5	<1.9	4.7	1.6	<2.5	<12	6	264
Environmental Screening Criteria[1]		Value	310,000	1,000,000	5,200,000	100,000	NE	240	50,000
		Basis	Tier 1 ESL[1]	Tier 1 ESL[1]	Tier 1 ESL[1]	Tier 1 ESL[1]	Tier 1 ESL[1]	Tier 1 ESL[1]	Tier 1 ESL[1]

1 Environmental Screening Level (ESL), RWQCB, San Francisco Bay Region - February 2016
< Not detected at or above laboratory reporting limit
NE Not Established
--- Not Analyzed
BOLD Concentration exceeds selected environmental screening criteria

APPENDIX A – 2000 CASE CLOSURE LETTER AND SUMMARY

September 11, 2000

Mr. Vincent C. Sevely
Ms. Helen Sevely et al
230 California Avenue, Suite 100
Palo Alto, CA 94306

Mr. Jerald Gurley
Lazano Westgate, Inc.
661 Grape Avenue
Sunnyvale, CA 94087

Dear Mr. Sevely, Ms. Sevely, and Mr. Gurley:

Subject: Fuel Leak Site Case Closure—Santa Clara Car Wash, 1483 El Camino Real, Santa Clara, CA 95050; Case No. 14-311

This letter transmits the enclosed underground storage tank (UST) case closure letter in accordance with Chapter 6.75 (Article 4, Section 25299.37[h]). The State Water Resources Control Board adopted this letter on February 20, 1997. As of March 1, 1997, the Santa Clara Valley Water District is required to use this case closure letter for all UST leak sites. We are also transmitting to you the enclosed case closure summary. These documents confirm the completion of the investigation and cleanup of the reported release at the subject site. The subject fuel leak case is closed.

If you have any questions, please call Rita S. Chan at (408) 265-2607, extension 2643. Thank you.

Sincerely,

ORIGINAL SIGNED BY

James S. Crowley, P.E.
Engineering Unit Manager
Leaking Underground Storage Tank Oversight Program

Enclosures:
1. Case Closure Letter
2. Case Closure Summary

cc: Mr. Chuck Headlee (w/enc)
Regional Water Quality Control Board
San Francisco Bay Region
1515 Clay Street, Suite 1400
Oakland, CA 94612

Mr. Larry Monette, Ph.D.
Santa Clara Fire Department
777 Benton Street
Santa Clara, CA 95050

Ms. Carla Lawson
Division of Clean Water Programs
Underground Storage Tank Cleanup Fund
State Water Resources Control Board
P.O. Box 944212
Sacramento, CA 94244-2120

R. Chan(w/orig enc), Database (w/enc)

RC:jcw:FL9482hhu

September 11, 2000

Mr. Vincent C. Sevely
Ms. Helen Sevely et al
230 California Avenue, Suite 100
Palo Alto, CA 94306

Mr. Jerald Gurley
Lazano Westgate, Inc.
661 Grape Avenue
Sunnyvale, CA 94087

Dear Mr. Sevely, Ms. Sevely, and Mr. Gurley:

Subject: Fuel Leak Site Case Closure—Santa Clara Car Wash, 1483 El Camino Real, Santa Clara, CA 95050; Case No. 14-311

This letter confirms the completion of a site investigation and remedial action for the underground storage tank(s) formerly located at the above-described location. Thank you for your cooperation throughout this investigation. Your willingness and promptness in responding to our inquiries concerning the former underground storage tank(s) are greatly appreciated.

Based on information in the above-referenced file and with the provision that the information provided to this agency was accurate and representative of site conditions, this agency finds that the site investigation and corrective action carried out at your underground storage tank(s) site is in compliance with the requirements of subdivisions (a) and (b) of Section 25299.37 of the Health and Safety Code and with corrective action regulations adopted pursuant to Section 25299.77 of the Health and Safety Code and that no further action related to the petroleum release(s) at the site is required.

This notice is issued pursuant to subdivision (h) of Section 25299.37 of the Health and Safety Code.

Please contact our office if you have any questions regarding this matter.

Sincerely,

ORIGINAL SIGNED BY

James S. Crowley, P.E.
Engineering Unit Manager
Leaking Underground Storage Tank Oversight Program

FL9482hhu

Santa Clara Valley Water District

CASE CLOSURE SUMMARY
LEAKING UNDERGROUND FUEL STORAGE TANK PROGRAM

I. AGENCY INFORMATION

Date: August 22, 2000

Agency Name: Santa Clara Valley Water District	Address: 5750 Almaden Expressway
City/State/Zip: San Jose, CA 95118	Phone: (408) 265-2600
Responsible Staff Person: Rita S. Chan, P.E.	Title: Assistant Civil Engineer

II. CASE INFORMATION

Site Facility Name: Santa Clara Car Wash		
Site Facility Address: 1483 El Camino Real, Santa Clara, CA 95050		
RB LUSTIS Case No.: ---	Local Case No.: 07S1W03H03f	LOP Case No.: 14-311
URF Filing Date: 10/06/88	SWEEPS No.: —	APN: 224-48-005

Responsible Parties	Addresses	Phone Number
Mr. Vincent C. Sevely Ms. Helen Sevely et al	230 California Avenue, Suite 100, Palo Alto, CA 94306	(650) 326-5025
Mr. Jerald Gurley Lazano Westgate, Inc.	661 Grape Avenue, Sunnyvale, CA 94087	(408) 749-9755

Tank I.D. No	Size in Gallons	Contents	Closed In Place/Removed?	Date
—	10,000	Gasoline	Removed	8/11/95
—	10,000	Gasoline	Removed	8/11/95
—	300	Gasoline	Removed	8/11/95
Piping			—	—

III. RELEASE AND SITE CHARACTERIZATION INFORMATION

Cause and Type of Release: Unknown; one 0.5-inch-diameter hole was found on the bottom of one of the 10,000gallon tanks during tank removal.		
Site characterization complete? Yes	Date Approved By Oversight Agency: —	
Monitoring wells installed? Yes	Number: 2*	Proper screened interval? Yes**
Highest GW Depth Below Ground Surface: 10.73'	Lowest Depth: 32'	Flow Direction: Northeast***
Most Sensitive Current Use: Potential Drinking Water		

* One groundwater monitoring well (GX-64A) was installed in 1986; in addition, one vapor monitoring well (GX-64B) was installed at the same time.
** GX64A was properly screened at the time of installation. However, the well screen has been submerged.
*** Based on a nearby fuel leak site located approximately 450 feet southwest of the subject site.

Summary of Production Wells in Vicinity: A well search indicates that there is one active and two properly destroyed water production wells within ¼-mile radius of the site. The active well (07S01W03H002) is located approximately 1033 ft NNW from the site. Based on the levels of residual contamination at the site and the vicinity of these wells to the site, they are not likely to be affected by the reported release.	
Are drinking water wells affected? No	Aquifer Name: Santa Clara Valley Groundwater Basin
Is surface water affected? No	Nearest SW Name: San Tomas Aquino Creek, 4,460 feet west of the site
Off-Site Beneficial Use Impacts (Addresses/Locations): None reported	
Reports on file? Yes	Where are reports filed? Santa Clara Valley Water District

TREATMENT AND DISPOSAL OF AFFECTED MATERIAL

Material	Amount (Include Units)	Action (Treatment or Disposal w/Destination)	Date
Tank	Two at 10,000 gallons One at 300 gallons	Disposed at Levin Metal Corporation, Richmond	8/11/95
Piping	—	—	—
Free Product	—	—	—
Soil	250 cubic yards	Unknown	8/11/95
Groundwater	—	—	—
Barrels	—	—	—

MAXIMUM DOCUMENTED CONTAMINANT CONCENTRATIONS

Contaminant	Soil (ppm)		Water (ppb)		Contaminant	Soil (ppm)		Water (ppb)	
	Before[1]	After[2]	Before	After		Before[1]	After[2]	Before	After
TPH (Gas)	26,000	ND	3,000[3]	ND	Xylene	1,500	ND	9.6[4]	ND
TPH (Diesel)	—	—	—	—	Ethylbenzene	290	ND	2.9[4]	ND
Benzene	19	ND	9.7[4]	ND	Oil & Grease	—	—	—	—
Toluene	340	ND	1.5[4]	1.6[5]	Heavy Metals (Lead)	16	—	—	—
Other	—	—	—	ND*	MTBE	—	—	—	<5

Description of Interim Remediation Activities: Tank removal in 1995

[1] Analytical results for soil samples collected under the former underground storage tanks (UST) and dispenser area during tanks removal, August 1995.

[2] Analytical results for soil samples collected from borings SB-1 and SB-2 during most recent soil and groundwater investigation, June 2000.

[3] Analytical results for a groundwater sample collected from monitoring well GX-64A in June 1986.

[4] Analytical results for a groundwater sample collected from monitoring well GX-64A in September 1995.

[5] Analytical results for a grab groundwater sample collected from boring SB-1 in June 2000.

* Fuel oxygenates analysis was performed for groundwater samples collected at GX-64A in December 1998 and grab groundwater samples collected at SB-1 and SB-2 in June 2000. Analytical results did not indicate the presence of Methyl tert-Butyl Ether, Ethyl tert-Butyl Ether, tert-Amyl Methyl Ether, Di-Isopropyl Ether, tert-Butanol, 1,2-Dichloroethane, and Ethylene Dibromide above detection limits.

IV. CLOSURE

Does completed corrective action protect existing beneficial uses per the Regional Board Basin Plan? Yes		
Does completed corrective action protect potential beneficial uses per the Regional Board Basin Plan? Yes		
Does corrective action protect public health for current land use? Santa Clara Valley Water District staff does not make specific determinations concerning public health risk. However, it does not appear that the release would present a risk to human health.		
Site Management Requirements: None		
Should corrective action be reviewed if land use changes? No		
Monitoring Wells Decommissioned: No	Number Decommissioned: 0	Number Retained: 2
List Enforcement Actions Taken: None		
List Enforcement Actions Rescinded: None		

V. ADDITIONAL COMMENTS, DATA, ETC.

Site History:

June 1986: One groundwater monitoring well (GX-64A) and one vapor monitoring well (GX-64B) were installed. Five soil samples were collected from GX-64A. Analytical results for soil samples indicated the presence of up to 254 parts per million (ppm) Total Petroleum Hydrocarbons as gasoline (TPHG). Analytical results for a groundwater sample collected from the well indicated 3,000 parts per billion (ppb) TPHG.

August 1995: Three USTs were removed from the site. Eight samples were collected from the excavation that formerly contained the two 10,000 gallon USTs at approximately 12 to 15 feet below ground surface (bgs). One sample was collected from beneath the center of each dispenser island and one sample was collected from the bottom of the excavation which formerly contained the 300 gallon UST. Analytical results for the soil samples collected beneath the two 10,000-gallon USTs indicated the presence of up to 19 ppm Benzene, 340 ppm Toluene, 290 ppm Ethylbenzene, 1,500ppm Xylenes, and 26,000 ppm TPHG. No detectable concentrations of TPHG or Benzene, Toluene, Ethylbenzene, Xylenes (BTEX) were detected in the soil samples collected from below the dispenser islands and the 300-gallon UST. Approximately 250 cubic yards of excavated soil was stockpiled at the site. However, no information is available regarding the disposal location of the soil. Analytical results for the stockpile samples indicated up to 320 ppm TPHG, 0.16 ppm Toluene, 0.21 ppm Ethylbenzene, and 2.2 ppm Xylenes.

Between September 1995 and December 1999: Groundwater sampling was performed at GX-64A.

June 2000: Two direct push borings (SB-1 and SB-2) were drilled approximately downgradient of the former UST area. Soil samples were collected from a depth of approximately 11 feet bgs. Grab groundwater samples were also collected. Analytical results for soil samples did not indicate BTEX, TPHG or MTBE. Analytical results for groundwater samples indicated the presence of 1.6 ppb Toluene; no Benzene, Ethylbenzene, Xylenes, TPHG or MTBE were detected.

Conclusion:

Although residual contamination exists at the site, it does not appear that the residual contamination would pose a significant risk to human health, safety, and the environment. Based on the most recent soil and groundwater investigation results, the Santa Clara Valley Water District staff does not believe that a continuing threat to soil and groundwater exists at the site; therefore, no further corrective action is necessary at this time.

VI. LOCAL AGENCY REPRESENTATIVE DATA

Prepared by: Rita S. Chan, P.E.	Title: Assistant Civil Engineer
Signature:	Date: 8/28/00
Approved by: James S. Crowley, P.E.	Title: Engineering Unit Manager
Signature:	Date: 09/05/00

This closure approval is based upon the available information and with the provision that the information provided to this agency was accurate and representative of site conditions.

VII. REGIONAL BOARD NOTIFICATION

Regional Board Staff Name: Chuck Headlee	Title: Engineering Geologist
RB Response: Concur, based solely upon information contained in this case closure summary.	Date Submitted to RB:
Signature: Please see the attached sheet for signature.	Date: 9/6/00

Attachments:

1. Site Plan
2. Monitoring Well locations and analytical results for soil and groundwater samples collected in June 1986
3. Sampling locations and analytical results for soil samples collected during tank removal in August 1995
4. Cumulative groundwater analytical results collected from September 1995 to December 1999
5. Boring locations and analytical results for soil and groundwater samples collected in June 2000
6. Fuel oxygenates analysis, December 1998 and June 2000

This document and the related CASE CLOSURE LETTER, shall be retained by the lead agency as part of the official site file.

VI. LOCAL AGENCY REPRESENTATIVE DATA

Prepared by: Rita S. Chan, P.E.	Title: Assistant Civil Engineer
Signature:	Date: 8/28/00
Approved by: James S. Crowley, P.E.	Title: Engineering Unit Manager
Signature:	Date: 09/05/00

This closure approval is based upon the available information and with the provision that the information provided to this agency was accurate and representative of site conditions.

VII. REGIONAL BOARD NOTIFICATION

Regional Board Staff Name: Chuck Headlee	Title: Engineering Geologist
RB Response: Concur, based solely upon information contained in this case closure summary.	Date Submitted to RB: 9/5/00
Signature: Chuck Headlee	Date: 9/6/00

Attachments:
1. Site Plan
2. Monitoring Well locations and analytical results for soil and groundwater samples collected in June 1986
3. Sampling locations and analytical results for soil samples collected during tank removal in August 1995
4. Cumulative groundwater analytical results collected from September 1995 to December 1999
5. Boring locations and analytical results for soil and groundwater samples collected in June 2000
6. Fuel oxygenates analysis, December 1998 and June 2000

This document and the related CASE CLOSURE LETTER, shall be retained by the lead agency as part of the official site file.

Post-it® Fax Note 7671	Date	# of pages ▶
To Rita Chan	From Chuck Headlee	
Co./Dept.	Co.	
Phone #	Phone #	
Fax #	Fax #	

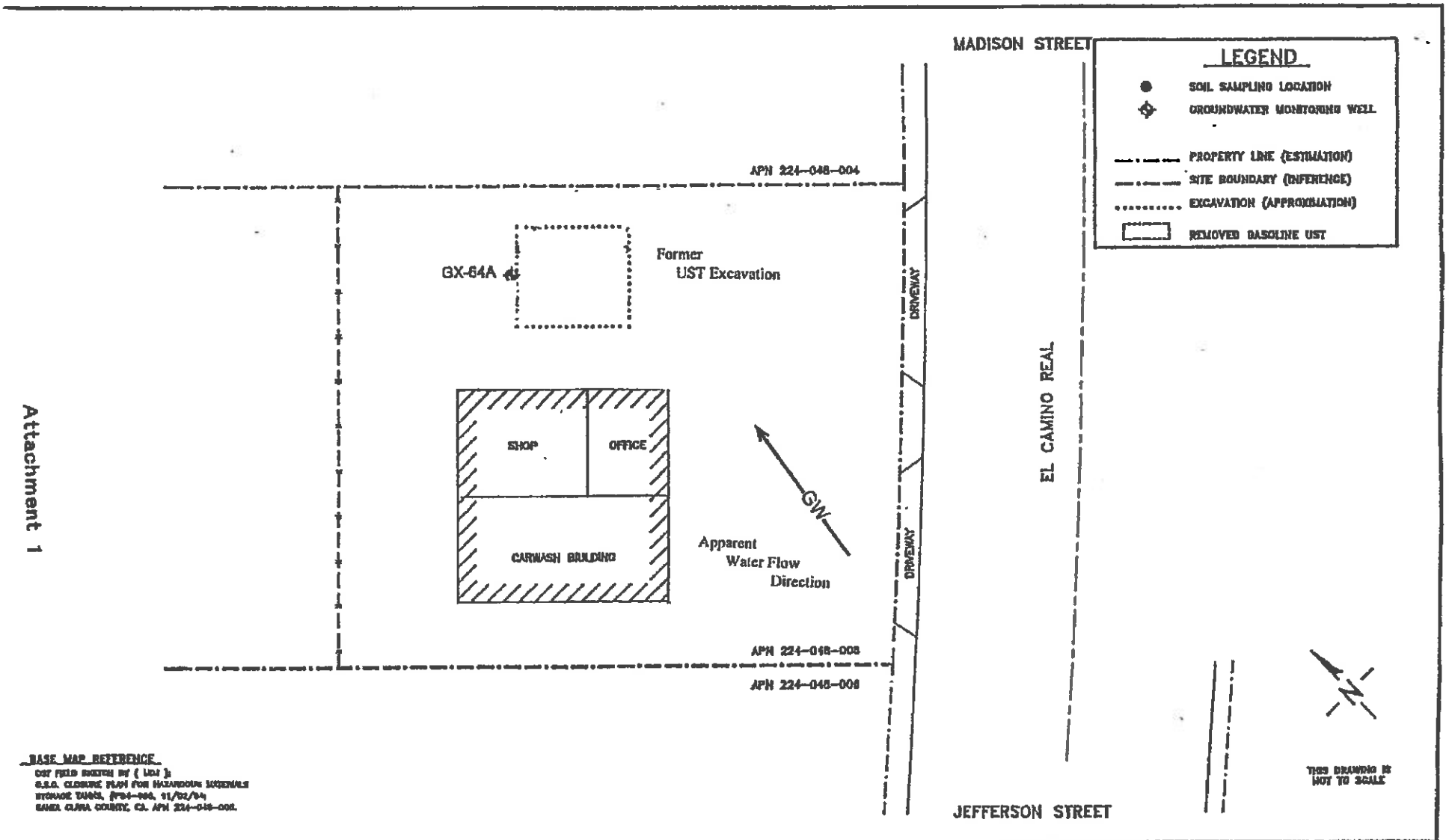

Attachment 1

ITC ASSOCIATES INC. Environmental, Geotechnical and Materials Professionals	REVISED	REVIEWED BY	SITE MAP GROUNDWATER MONITORING REPORT 1483 EL CAMINO REAL SANTA CLARA, CALIFORNIA	FIGURE 1
	11 x 17 / 7501-GMR	REVIEW DATE		PROJECT 17598.750

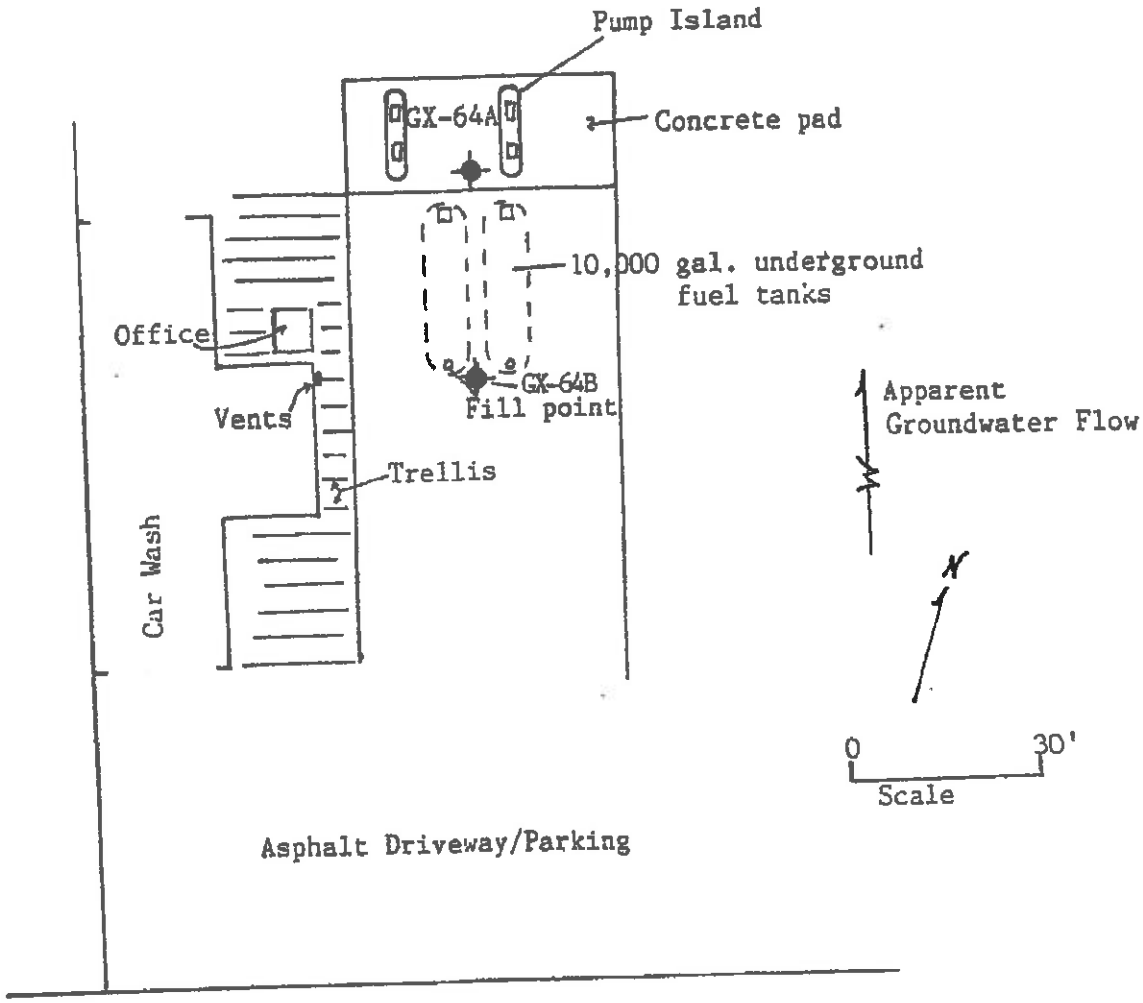

Figure 1. Site Map
Santa Clara Full Service Car Wash
1483 El Camino Real
Santa Clara, CA

Suite 212
100 West Rincon Avenue
Campbell, CA 95008

Geonomics Inc.
ENVIRONMENTAL SERVICES DIVISION

(408) 374-9116

RECEIVED
JUL 3 1986
S. C. F. D.

July 1, 1986

Mr. Larry Monette
Santa Clara Fire Department
777 Benton Street
Santa Clara, CA 95050

Dear Mr. Monette:

The attached monitoring well installation and laboratory report summarizes the installation and laboratory testing of groundwater monitoring well GX-64A and vapor monitoring well GX-64B at:

Santa Clara Full Service Car Wash

to monitor its underground tank storage facility at:

1483 El Camino Real, Santa Clara, CA

During installation of GX-64A five soils samples were taken for laboratory analyses and one water sample was taken after the well was developed. Test results of the soils samples ranged from 12.07 UG/GM (PPM) to 254.17 UG/GM (PPM) total hydrocarbons (gasoline) as follows:

Sample #	Depth	Test Result
GX64A-1	12 ft	23.48 UG/GM (PPM)
GX64A-2	17 ft	254.17 UG/GM (PPM)
GX64A-3	22 ft	18.09 UG/GM (PPM)
GX64A-4	27 ft	12.07 UG/GM (PPM)
GX64A-5	32 ft	40.21 UG/GM (PPM)

Groundwater was first encountered at a depth of approximately 35 ft. After the well was developed, the water level stabilized at approximately 32 ft. The water sample GX64-AW, taken after the well was purged, tested 3.00 MG/LT (PPM). The sample of the native soil immediately below the tank backfill in well GX-64B (sample # GX64B) tested 67.61 UG/GM (PPM). The bottom of the tank backfill was approximately 11.5 ft.

Gasoline odors were generally evident in drill cuttings during drilling and installation of the wells. A reported surface discharge (overfill) in the past, (4-5 years ago), might explain the hydrocarbon concentrations that were detected.

Enclosed are copies of the drilling logs and the laboratory reports. If you have any questions regarding the installation please contact us or Mr. Gurley at Santa Clara Full Service Carwash.

Sincerely,

Frank W. Smith
Geologist

Enclosure

cc: Mr. Gerald N. Gurley, Santa Clara Full Service Car Wash

FIREMAN'S FUND
INSURANCE COMPANIES
Environmental Laboratory
3700 Lakeville Highway
Petaluma, CA 94952
(707) 778-4160

ENVIRONMENTAL LABORATORY

Frank Smith
Geonomics, Inc.
100 West Rincon Avenue, Ste. 212
Campbell, CA 95008

L A B O R A T O R Y R E S U L T S

Supply/Order No.:
Client's Survey No.: 184-GX64W
Contract/PO No.: NO CONTRACT NUMBER
Release No.:

Laboratory Job No.: 861918
Date Received: 06/10/86
Date Reported: 06/30/86
Client Code: GEON3

ASSAY:SOLVENTS (NIOSH 127)
MATRIX:WASTE WATER FROM SANTA CLARA FULL SERVICE CAR WASH 1483 EL CAMINO REAL, SANTA CLARA, CA.

ABNO	SMPLNO-ID	AIR(LT)	FRONT(MG)	BACK(MG)	TOTAL(MG)	MG/M3	PPM
11803	4AW						
TOTAL HYDROCARBONS				3.00 MG/LT			

ANALYST:JEAN M.BONITE

APPROVED BY
JERRY TUMA, PH.D., CIH
DIRECTOR, ENVIRONMENTAL LABORATORY

Attachment 2C

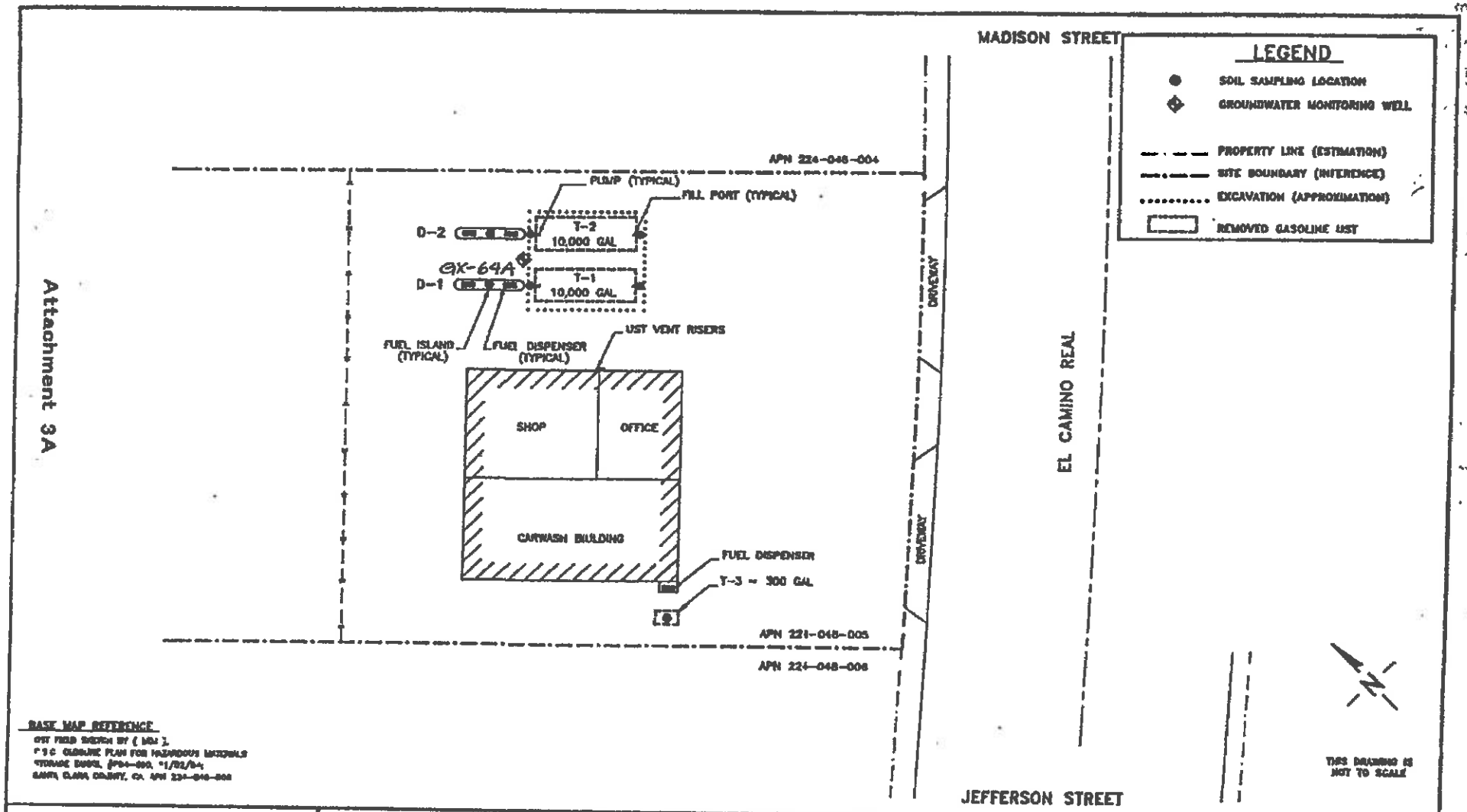

Attachment 3A

ON-SITE TECHNOLOGIES	REVISED JDA 09/13/95	REVIEWED BY	SITE MAP SOIL SAMPLING REPORT--UNDERGROUND STORAGE TANK REMOVAL 1483 EL CAMINO REAL SANTA CLARA, CALIFORNIA	FIGURE 1
		REVIEW DATE		PROJECT 407-1.1

OST	TABLE 2 - SOIL ANALYTICAL RESULTS (Tank Excavation Pits) Santa Clara Car Wash, 1483 El Camino Real, Santa Clara, California							
Sample No.	Sample Date	Sample Depth (feet-below ground surface)	Benzene (mg/kg)	Toluene (mg/kg)	Ethylbenzene (mg/kg)	Xylenes (mg/kg)	TPHg (mg/kg)	Total Lead
T-1-1	08/11/95	12	0.045	ND	0.410	5.700	94	7.3
T-1-2	08/11/95	12	1.300	17.000	10.000	66.000	880	10
D-1-1	08/11/95	3.5	ND	ND	ND	ND	ND	ND
T-3-1	08/11/95	12	ND	ND	ND	ND	ND	ND
T-2-1	08/11/95	12	0.270	3.100	2.400	19.000	260	7.3
T-2-2	08/11/95	12	0.810	19.000	14.000	78.000	1,500	16
D-2-2	08/11/95	3.5	ND	ND	ND	ND	ND	10
T1-3	08/14/95	15.5	15.000	340.000	290.000	1,500.000	26,000	NA
T2-3	08/14/95	15.5	4.300	38.000	12.000	79.000	940	NA
T1-4	08/14/95	15.5	3.700	19.000	5.500	29.000	440	NA
T2-4	08/14/95	15.5	19.000	180.000	74.000	370.000	6,900	NA
Detection Limits			0.005	0.005	0.005	0.005	1.0	1.0

Notes:
ND = Not detected above the laboratory detection limit
NA = Not Analyzed
mg/kg = milligrams per kilogram
TPHg = Total Petroleum Hydrocarbons as gasoline

Attachment 3B

407-1.1tpl

ATC

TABLE 3 - GROUNDWATER ANALYTICAL RESULTS AND FIELD MEASUREMENTS

1483 El Camino Real, Santa Clara, California

Well No.	Sample Date	Benzene (ug/L)	Toluene (ug/L)	Ethyl benzene (ug/L)	Total Xylenes (ug/L)	TPH as Gasoline (ug/L)	MTBE (ug/L)	pH (Units)	Conductivity (uS)	Turbidity (NTU)	Temp
GX-64A	09/08/95	9.7	1.5	2.9	9.6	140	NA	7.6	1,300	NM	20
	05/13/97	< 0.5	< 0.5	< 0.5	< 0.5	< 50.0	< 5.0	7.1	920	1.1	20
	12/10/97	< 0.5	< 0.5	< 0.5	< 0.5	< 50.0	< 5.0	6.9	1,020	1.9	18
	02/17/99	2.1	7.2	1.6	7.8	<50.0	<5.0	7.5	1,000	0.7	19
	12/09/99	< 0.5	< 0.5	< 0.5	< 0.5	< 50.0	< 5.0	7.4	1,120	2.5	19

Notes:
- MTBE = Methyl Tertiary Butyl Ether
- TPH = Total Petroleum Hydrocarbons
- NM = Not Measured
- NTU = Nephelometric Turbidity Units
- mV = millivolts
- ug/L = Micrograms per liter (ppb) - parts per billion
- uS = Micromhos per centimeter
- <x = Laboratory reporting limit is less than x

ATC Proj No. 17598 7501

Attachment 4

Attachment 5A

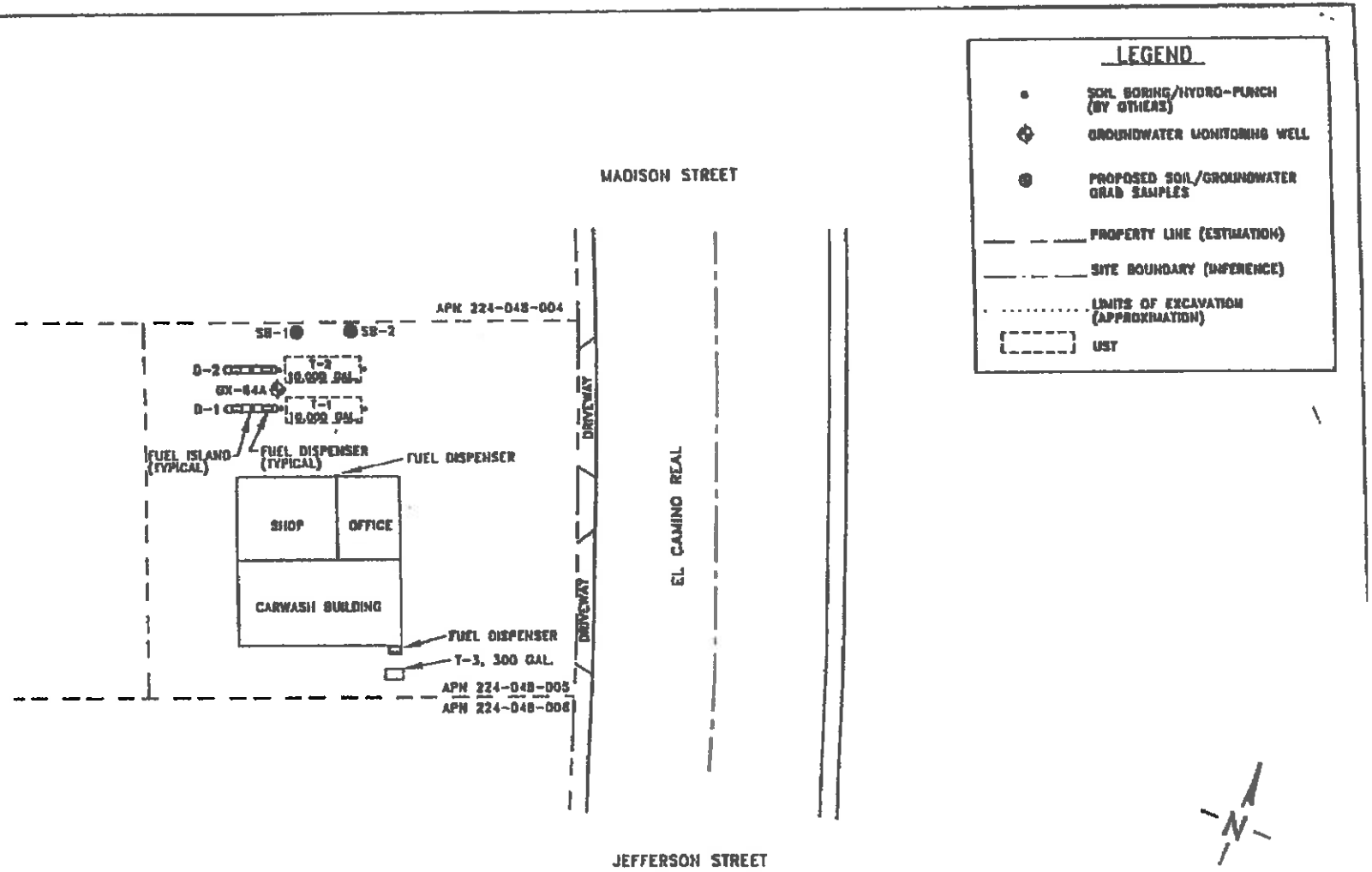

THIS DRAWING IS NOT TO SCALE

ATC ASSOCIATES INC. Environmental, Geotechnical and Materials Professionals	REVISED JS 5/16/00	REVIEWED BY	SITE MAP WORK PLAN FOR SOIL & GROUNDWATER INVESTIGATION 1483 EL CAMINO REAL SANTA CLARA, CALIFORNIA	FIGURE 1
	11 x 17 7501-S	REVIEW DATE		PROJECT 17598.7501

Entech Analytical Labs, Inc.

CA ELAP# 2346

525 Del Rey Avenue, Suite E • Sunnyvale, CA 94086 • (408) 735-1550 • Fax (408) 735-1554

ATC Associates, Inc.
6602 Owens Drive, Suite 100
Pleasanton, CA 94588
Attn: Ron Michelson

Date: 6/21/00
Date Received: 6/12/00
Project Name:
Project Number: 75.17598.7503
P.O. Number:
Sampled By: Client

Certified Analytical Report

Order ID: 20895 **Lab Sample ID:** 20895-001 **Client Sample ID:** SB-1-12

Sample Time: 11:28 AM Sample Date: 6/12/00 Matrix: Solid

Parameter	Result	Flag	DF	PQL	DLR	Units	Extraction Date	Analysis Date	QC Batch ID	Method
Benzene	ND		1	0.005	0.005	mg/Kg	N/A	6/13/00	SGC1000613	EPA 8020
Toluene	ND		1	0.005	0.005	mg/Kg	N/A	6/13/00	SGC1000613	EPA 8020
Ethyl Benzene	ND		1	0.005	0.005	mg/Kg	N/A	6/13/00	SGC1000613	EPA 8020
Xylenes, Total	ND		1	0.005	0.005	mg/Kg	N/A	6/13/00	SGC1000613	EPA 8020

Surrogate	Surrogate Recovery	Control Limits (%)
aaa-Trifluorotoluene	106	65 - 135

Parameter	Result	Flag	DF	PQL	DLR	Units	Extraction Date	Analysis Date	QC Batch ID	Method
TPH as Gasoline	ND		1	1	1	mg/Kg	N/A	6/13/00	SGC1000613	EPA 8015 MOD. (Purgeable)

Surrogate	Surrogate Recovery	Control Limits (%)
aaa-Trifluorotoluene	114	65 - 135

DF = Dilution Factor ND = Not Detected DLR = Detection Limit Reported PQL = Practical Quantitation Limit

Analysis performed by Entech Analytical Labs, Inc. (CA ELAP #2346)

Michelle L. Anderson, Laboratory Director

Environmental Analysis Since 1983

Attachment 5B

Entech Analytical Labs, Inc.

CA ELAP# 2346

525 Del Rey Avenue, Suite E • Sunnyvale, CA 94086 • (408) 735-1550 • Fax (408) 735-1554

ATC Associates, Inc.
6602 Owens Drive, Suite 100
Pleasanton, CA 94588
Attn: Ron Michelson

Date: 6/21/00
Date Received: 6/12/00
Project Name:
Project Number: 75.17598.7503
P.O. Number:
Sampled By: Client

Certified Analytical Report

Order ID: 20895 Lab Sample ID: 20895-002 Client Sample ID: SB-2

Sample Time: 12:41 PM Sample Date: 6/12/00 Matrix: Solid

Parameter	Result	Flag	DF	PQL	DLR	Units	Extraction Date	Analysis Date	QC Batch ID	Method
Benzene	ND		1	0.005	0.005	mg/Kg	N/A	6/13/00	SGC1000613	EPA 8020
Toluene	ND		1	0.005	0.005	mg/Kg	N/A	6/13/00	SGC1000613	EPA 8020
Ethyl Benzene	ND		1	0.005	0.005	mg/Kg	N/A	6/13/00	SGC1000613	EPA 8020
Xylenes, Total	ND		1	0.005	0.005	mg/Kg	N/A	6/13/00	SGC1000613	EPA 8020

Surrogate	Surrogate Recovery	Control Limits (%)
aaa-Trifluorotoluene	103	65 - 135

Parameter	Result	Flag	DF	PQL	DLR	Units	Extraction Date	Analysis Date	QC Batch ID	Method
[illegible] as Gasoline	ND		1	1	1	mg/Kg	N/A	6/13/00	SGC1000613	EPA 8015 MOD. (Purgeable)

Surrogate	Surrogate Recovery	Control Limits (%)
aaa-Trifluorotoluene	112	65 - 135

DF = Dilution Factor ND = Not Detected DLR = Detection Limit Reported PQL = Practical Quantitation Limit

Analysis performed by Entech Analytical Labs, Inc. (CA ELAP #2346)

Michelle L. Anderson, Laboratory Director

Environmental Analysis Since 1983

Attachment 5C

Entech Analytical Labs, Inc.

CA ELAP# 2346

525 Del Rey Avenue, Suite E • Sunnyvale, CA 94086 • (408) 735-1550 • Fax (408) 735-1554

ATC Associates, Inc.
6602 Owens Drive, Suite 100
Pleasanton, CA 94588
Attn: Ron Michelson

Date: 6/21/00
Date Received: 6/12/00
Project Name:
Project Number: 75.17598.7503
P.O. Number:
Sampled By: Client

Certified Analytical Report

Order ID: 20895 **Lab Sample ID:** 20895-003 **Client Sample ID:** SB1W

Sample Time: 11:58 AM Sample Date: 6/12/00 Matrix: Liquid

Parameter	Result	Flag	DF	PQL	DLR	Units	Extraction Date	Analysis Date	QC Batch ID	Method
Benzene	ND		1	0.5	0.5	µg/L	N/A	6/14/00	WGC4000614	EPA 8020
Toluene	1.6		1	0.5	0.5	µg/L	N/A	6/14/00	WGC4000614	EPA 8020
Ethyl Benzene	ND		1	0.5	0.5	µg/L	N/A	6/14/00	WGC4000614	EPA 8020
Xylenes, Total	ND		1	0.5	0.5	µg/L	N/A	6/14/00	WGC4000614	EPA 8020

Surrogate	Surrogate Recovery	Control Limits (%)
aaa-Trifluorotoluene	90	65 - 135

Parameter	Result	Flag	DF	PQL	DLR	Units	Extraction Date	Analysis Date	QC Batch ID	Method
[illegible] as Gasoline	ND		1	50	50	µg/L	N/A	6/14/00	WGC4000614	EPA 8015 MOD (Purgeable)

Surrogate	Surrogate Recovery	Control Limits (%)
aaa-Trifluorotoluene	103	65 - 135

DF = Dilution Factor ND = Not Detected DLR = Detection Limit Reported PQL = Practical Quantitation Limit

Analysis performed by Entech Analytical Labs, Inc. (CA ELAP #2346)

Michelle L. Anderson, Laboratory Director

Environmental Analysis Since 1983

Attachment 5D

Entech Analytical Labs, Inc.

CA ELAP# 2346

525 Del Rey Avenue, Suite E • Sunnyvale, CA 94086 • (408) 735-1550 • Fax (408) 735-1554

ATC Associates, Inc.
6602 Owens Drive, Suite 100
Pleasanton, CA 94588
Attn: Ron Michelson

Date: 6/21/00
Date Received: 6/12/00
Project Name:
Project Number: 75.17598.7503
P.O. Number:
Sampled By: Client

Certified Analytical Report

Order ID: 20895 Lab Sample ID: 20895-004 Client Sample ID: SB2W

Sample Time: 12:55 PM Sample Date: 6/12/00 Matrix: Liquid

Parameter	Result	Flag	DF	PQL	DLR	Units	Extraction Date	Analysis Date	QC Batch ID	Method
Benzene	ND		1	0.5	0.5	µg/L	N/A	6/13/00	WGC4000612	EPA 8020
Toluene	ND		1	0.5	0.5	µg/L	N/A	6/13/00	WGC4000612	EPA 8020
Ethyl Benzene	ND		1	0.5	0.5	µg/L	N/A	6/13/00	WGC4000612	EPA 8020
Xylenes, Total	ND		1	0.5	0.5	µg/L	N/A	6/13/00	WGC4000612	EPA 8020

Surrogate	Surrogate Recovery	Control Limits (%)
aaa-Trifluorotoluene	97	65 - 135

Parameter	Result	Flag	DF	PQL	DLR	Units	Extraction Date	Analysis Date	QC Batch ID	Method
TPH as Gasoline	ND		1	50	50	µg/L	N/A	6/13/00	WGC4000612	EPA 8015 MOD. (Purgeable)

Surrogate	Surrogate Recovery	Control Limits (%)
aaa-Trifluorotoluene	108	65 - 135

DF = Dilution Factor ND = Not Detected DLR = Detection Limit Reported PQL = Practical Quantitation Limit

Analysis performed by Entech Analytical Labs, Inc. (CA ELAP #2346)

Michelle R. Anderson, Laboratory Director

Environmental Analysis Since 1983

Attachment 5E

ATC

TABLE 4 - GROUNDWATER ANALYSIS FOR OXYGENATES AND CHLORINATED COMPOUNDS

1483 El Camino Real, Santa Clara, California

Sample I.D	GX-164A	RESULTS (ug/l)	EPA METHOD
Date Sampled	12/17/98		
ANALYTE			
tert Butanol	TBA	ND<20	8240
Methyl tertiary butyl ether	MTBE	ND<5.0	8240
Diisopropyl Ether	DIPE	ND<5.0	8240
Ethyl-tert-butyl-ether	ETBE	ND<5.0	8240
tert-Amylmethyl ether	TAME	ND<5.0	8240
1,2 Dicloroethane	1,2 DCA	ND<0.5	8010
Ethylene Dibromide	EDB	ND<0.5	8010

Advanced Technology Laboratories

Print Date: 6/26/00

CLIENT: Entech Analytical Labs, Inc.
Lab Order: 044937
Project: 20895
Lab ID: 044937-001A

Client Sample ID: 20895-003/SB1W
Collection Date: 6/12/00
Matrix: LIQUID

Analyses	Result	Limit	Qual	Units	DF	Date Analyzed
VOLATILE ORGANIC COMPOUNDS BY GC/MS			EPA 8260B			
	QC Batch Number:		Q00VOCW119			Analyst: DJK
1,2-Dibromoethane	ND	5.0		µg/L	1	6/26/00
1,2-Dichloroethane	ND	5.0		µg/L	1	6/26/00
Di-isopropyl ether	ND	5.0		µg/L	1	6/26/00
Ethyl tert-butyl ether	ND	5.0		µg/L	1	6/26/00
MTBE	ND	5.0		µg/L	1	6/26/00
Tert-amyl methyl ether	ND	5.0		µg/L	1	6/26/00
Tert-Butanol	ND	200		µg/L	1	6/26/00

Qualifiers:
ND - Not Detected at the Reporting Limit
J - Analyte detected below quantitation limits
B - Analyte detected in the associated Method Blank
S - Spike Recovery outside accepted recovery limits
R - RPD outside accepted recovery limits
E - Value above quantitation range

Initials: RA

Advanced Technology Laboratories 1510 E. 33rd Street Signal Hill, CA 90807 Tel: 562 989-4045 Fax: 562 989-4040

Attachment 6B

Advanced Technology Laboratories

Print Date: 6/26/00

CLIENT: Entech Analytical Labs, Inc.
Lab Order: 044937
Project: 20895
Lab ID: 044937-002A

Client Sample ID: 20895-004/SB2W
Collection Date: 6/12/00
Matrix: LIQUID

Analyses	Result	Limit	Qual	Units	DF	Date Analyzed
VOLATILE ORGANIC COMPOUNDS BY GC/MS			**EPA 8260B**			
	QC Batch Number:		Q00VOCW119			Analyst: DJK
1,2-Dibromoethane	ND	5.0		µg/L	1	6/26/00
1,2-Dichloroethane	ND	5.0		µg/L	1	6/26/00
Di-isopropyl ether	ND	5.0		µg/L	1	6/26/00
Ethyl tert-butyl ether	ND	5.0		µg/L	1	6/26/00
MTBE	ND	5.0		µg/L	1	6/26/00
Tert-amyl methyl ether	ND	5.0		µg/L	1	6/26/00
Tert-Butanol	ND	200		µg/L	1	6/26/00

Qualifiers:
ND - Not Detected at the Reporting Limit
J - Analyte detected below quantitation limits
B - Analyte detected in the associated Method Blank
S - Spike Recovery outside accepted recovery limits
R - RPD outside accepted recovery limits
E - Value above quantitation range

Initials: RA

Advanced Technology Laboratories 1510 E. 33rd Street Signal Hill, CA 90807 Tel: 562 989-4045 Fax: 562 989-4040

Attachment 6C

APPENDIX B – 2017 PHASE II INVESTIGATION DATA TABLES

CORNERSTONE EARTH GROUP

Table A. Analytical Results of Selected Soil Samples - Metals
(Concentrations in mg/kg)

Sample ID	Date	Depth (feet)	Arsenic	Barium	Chromium	Cobalt	Copper	Lead	Nickel	Vanadium	Zinc
EB-1 (0-1')	4/6/2017	0-1	<3.00	59.8	148	37.7	94.3	<1.30	63.4	149	62.7
EB-1 (2-3')	4/6/2017	2-3	<3.00	33.6	135	32.9	88.1	<1.30	54.7	129	54.1
EB-1 (9-10')	4/6/2017	9-10	<3.00	44.7	130	33.2	82.9	<1.30	57	127	54.5
SS-1 (0-1/2')	4/6/2017	0-½	6.16	---	---	---	---	44.6	---	---	---
SS-2 (0-1/2')	4/6/2017	0-½	3.85	---	---	---	---	76.3	---	---	---
SS-3 (0-1/2')	4/6/2017	0-½	4.37	---	---	---	---	46.2	---	---	---
ESL[1] - Tier 1			11 [2]	3,000	NE	23	3,100	80	86	390	23,000

1 Environmental Screening Level (ESL), RWQCB, San Francisco Bay Region - February 2016.
2 Duverge, 2011. Establishing Backround Arsenic in Soil of the Urbanized San Francisco Bay Region.
< Not detected at or above laboratory reporting limit
NE Not Established
--- Not Analyzed

CORNERSTONE EARTH GROUP

Table B. Analytical Results of Selected Soil Samples - Petroleum Hydrocarbns, Volitile Organic Compounds, Polyaromatic Hydrocarbons, PCBS

(Concentrations in mg/kg)

			TPH			VOCs							PAHs			
Sample ID	**Date**	**Depth (feet)**	**TPHo**	**TPHd**	**TPHg**	**Toluene**	**Ethylbenzene**	**m,p-Xylene**	**o-xylene**	**n-Propylbenzene**	**1,3,5-Trimethylbenzene**	**1,2,4-Trimethylbenzene**	**2-Methylnaphthalene**	**1-Methylnapthalene**	**Naphthalene**	**PCBs**
EB-1 (0.1')	4/6/2017	0-1	14.2	<2.0	---	---	---	---	---	---	---	---	0.019	0.0087	---	ND
EB-1 (2-3')	4/6/2017	2-3	---	---	<0.11	<0.011	<0.011	<0.011	<0.011	<0.011	<0.011	<0.011	---	---	<0.011	---
EB-1 (4-5')	4/6/2017	4-5	26.8	2.76	<0.11	<0.011	<0.011	<0.011	<0.011	<0.011	<0.011	<0.011	---	---	<0.011	---
EB-1 (9-10')	4/6/2017	9-10	<10	3.16	<0.095	<0.0095	<0.0095	<0.0095	<0.0095	<0.0095	<0.0095	<0.0095	---	---	<0.0095	---
EB-1 (16-17')	4/6/2017	16-17	<10	20.1	**2,450**	**61.7**	**26.1**	**96.9**	**38.3**	9.67	15.7	57.9	---	---	<8.9	---
ESL[1] - Tier 1			5,100	230	100	2.9	1.4	2.3	2.3	NE	NE	NE	0.25	NE	0.033	Various

1 Environmental Screening Level (ESL), RWQCB, San Francisco Bay Region - February

< Not detected at or above laboratory reporting limit

NE Not Established

--- Not Analyzed

BOLD Concentration exceeds selected environmental screening criteria

CORNERSTONE EARTH GROUP

Table C. Analytical Results of Selected Soil Samples - Organochloride Pesticides
(Concentrations in mg/kg)

Sample ID	Date	Depth (feet)	4,4´-DDD	4,4´-DDE	4,4´-DDT	DDT Total	alpha-Chlordane	gamma-Chlordane	Chlordane	Dieldrin	Endrin Aldehyde
EB-1 (0-1')	4/6/2017	0-1	<0.002	<0.002	<0.002	<0.002	<0.002	<0.02	<0.02	<0.002	<0.002
SS-1 (0-1/2')	4/6/2017	0-½	<0.0057	0.0729	0.0237	0.0966	0.0159	0.0156	0.247	<0.0015	<0.0015
SS-2 (0-1/2')	4/6/2017	0-½	<0.0057	0.0223	0.0078	0.0301	0.00251	0.0341	0.0485	<0.0015	0.00174
SS-3 (0-1/2')	4/6/2017	0-½	<0.0057	0.0277	0.0185	0.0462	0.00355	0.00428	0.0691	**0.00368**	<0.0015
ESL[1] - Tier 1			2.7	1.9	1.9	1.0 [2]	NE	NE	0.48	0.00017	NE

1 Environmental Screening Level (ESL), RWQCB, San Francisco Bay Region - February 2016.
2 Total Threshold Limit Concentration (TTLC) - California Code of Regulations, Title 22.
< Not detected at or above laboratory reporting limit
NE Not Established
--- Not Analyzed
BOLD Concentration exceeds selected environmental screening criteria

CORNERSTONE EARTH GROUP

Table D. Analytical Results of Selected Ground Water Samples
(Concentrations in µg/L)

Sample ID	Date	TPHd	TPHg	TPHo	Benzene	Toluene	Ethylbenzene	m,p-Xylene	o-xylene	1,2-DCA	1,1-Dichloropropene	1,2-Dichlorobenzene	1,3-Dichlorobenzene	1,4-Dichlorobenzene	1,2,4-Trimethylbenzene	1,3,5-Trimethylbenzene	Isopropylbenzene	n-Propylbenzene
EB-1 (W)	4/6/2017	**86,500**	**136,000**	<11,000	**3,000**	**8,900**	**5,200**	**17,000**	**8,200**	<92	<160	<130	<140	<150	4,900	2,300	2,300	730
EB-2 (W)	4/6/2017	<100	<41	<0.11	<0.22	<0.20	<0.27	<1.4	<0.22	<0.15	<0.26	<0.22	<0.23	<0.25	<0.32	<0.34	<0.30	<0.41
EB-3 (W)	4/6/2017	<100	<41	<0.11	<0.22	<0.20	<0.27	<1.4	<0.22	<0.15	<0.26	<0.22	<0.23	<0.25	<0.32	<0.34	<0.30	<0.41
EB-4	4/27/2017	<100	<50	<0.11	<0.50	<0.50	<0.50	<0.39	<0.50	<0.50	<0.50	<0.50	<0.50	<0.50	<0.50	<0.50	<0.50	<0.50
EB-5	4/27/2017	<100	<62	<0.11	<0.19	<0.18	<0.24	<0.49	<0.19	<0.14	<0.23	<0.20	<0.21	<0.22	<0.29	<0.30	<0.27	<0.37
EB-6	4/27/2017	**141**	<50	<0.11	<0.50	<0.50	<0.50	<0.39	<0.50	<0.50	<0.50	<0.50	<0.50	<0.50	<0.50	<0.50	<0.50	<0.50
EB-7	4/27/2017	**238**	<50	<0.11	<0.50	<0.50	<0.50	<0.39	<0.50	**0.75**	<0.50	<0.50	<0.50	<0.50	<0.50	<0.50	<0.50	<0.50
EB-8	4/27/2017	**161**	<50	<0.11	<0.50	<0.50	<0.50	<0.39	<0.50	<0.50	<0.50	<0.50	<0.50	<0.50	<0.50	<0.50	<0.50	<0.50
EB-9	4/27/2017	<100	79.9	<0.11	<0.33	<0.30	<0.41	<0.83	<0.32	<0.23	<0.39	<0.34	<0.35	<0.37	<0.49	<0.51	<0.46	<0.62
EB-10	4/27/2017	<100	<39	<0.11	<0.21	<0.19	<0.26	<0.53	<0.21	<0.15	<0.25	0.26	0.27	0.26	<0.31	<0.33	<0.29	<0.40
EB-11	4/27/2017	<100	<36	<0.11	<0.19	<0.18	<0.24	<0.48	<0.19	<0.13	<0.23	<0.20	<0.21	<0.22	<0.28	<0.30	<0.27	<0.36
EB-12	4/27/2017	<100	<33	<0.11	<0.18	<0.16	<0.22	1.1	<0.18	0.13	0.4	<0.18	<0.19	<0.20	<0.26	<0.28	<0.25	<0.34
EB-13	4/27/2017	<100	<50	<0.11	<0.50	<0.50	<0.50	<0.39	<0.50	<0.50	<0.50	<0.50	<0.50	<0.50	<0.50	<0.50	<0.50	<0.50
ESL[1] - Tier 1		100	100	100	1.0	40	13	20	20	0.5	NE	14	65	5.0	NE	NE	NE	NE

1 Environmental Screening Level (ESL), RWQCB, San Francisco Bay Region - February 2016.
< Not detected at or above laboratory reporting limit
NE Not Established
--- Not Analyzed
BOLD Concentration exceeds selected environmental screening criteria

CORNERSTONE EARTH GROUP

Table E. Analytical Results of Selected Soil Vapor Samples
(Concentrations in µg/m³)

Sample ID	Date	Depth (feet)	TPHg	Benzene	Toluene	Ethylbenzene	m,p-Xylene	o-Xylene	4-Ethyltoluene	1,3,5-Trimethylbenzene	1,2,4-Trimethylbenzene	Carbon Disulfide	Chloroform	Cyclohexane	Hexane	2,2,4-Trimethylpentane	Tetrahydrofuran
EB-1	4/12/2017	5	2,500	14	21	14	72	33	24	8.4	28	16	7.5	98	48	15	5.7
EB-2	4/12/2015	5	<540	10	9.2	<5.7	20	7.5	<6.5	<6.5	<39	20	<6.4	<4.5	<4.6	<6.2	<3.9
EB-3	4/12/2015	5	1,500	21	22	9.6	38	13	10	<6.2	7.4	82	7.8	<4.3	<4.4	<5.9	<3.7
ESL[1] - Tier 1			50,000	48	160,000	560	52000	52,000	NE	NE	7,300	NE	61	NE	NE	NE	NE

1 Environmental Screening Level (ESL), RWQCB, San Francisco Bay Region - February 2016.
< Not detected at or above laboratory reporting limit
NE Not Established
--- Not Analyzed

APPENDIX C – SOIL BORING LOGS

BORING NUMBER EB-1

CORNERSTONE EARTH GROUP

PROJECT NAME 1433-1493 El Camino Real
PROJECT NUMBER 958-1-2
PROJECT LOCATION Santa Clara, CA

DATE STARTED 4/6/17 **DATE COMPLETED** 4/6/17
GROUND ELEVATION **BORING DEPTH** 20 ft.
DRILLING CONTRACTOR Penecore
LATITUDE **LONGITUDE**
DRILLING METHOD Geoprobe 7822DT
GROUND WATER LEVELS:
LOGGED BY BMJ
AT TIME OF DRILLING Not Encountered
NOTES
AT END OF DRILLING Not Encountered

This log is a part of a report by Cornerstone Earth Group, and should not be used as a stand-alone document. This description applies only to the location of the exploration at the time of drilling. Subsurface conditions may differ at other locations and may change at this location with time. The description presented is a simplification of actual conditions encountered. Transitions between soil types may be gradual.

ELEVATION (ft)	DEPTH (ft)	SYMBOL	DESCRIPTION	N-Value (uncorrected) blows per foot	Sample Type and Interval	Sample Submitted for Laboratory Analysis	Percent Recovery (%)	OVM Reading (ppm)	Odors or Discoloration	Notes
	0		4 inches asphalt concrete over 6 inches aggregate base							
			Sandy Lean Clay (CL) [Fill] moist, bluish gray to brown, fine to coarse sand					0.1		
							80		None	
								0.1		
	5									
								0.1		
								0.1		
							80		None	
								0.2		
								0.2		
	10									
								4.0		
								7.0		
							60			
			Lean Clay (CL) medium stiff, moist, brown, fine sand					16.4		
								154.6	strong hydrocarbon odor	
	15		**Clayey Sand (SC)** wet, dark gray to gray, fine sand					339.1		
								540.6	very strong odor	
							65			
								43.6		
								7.4		
	20		Bottom of Boring at 20.0 feet.							

BORING NUMBER EB-2

CORNERSTONE EARTH GROUP

PROJECT NAME 1433-1493 El Camino Real
PROJECT NUMBER 958-1-2
PROJECT LOCATION Santa Clara, CA

DATE STARTED 4/6/17 **DATE COMPLETED** 4/6/17
GROUND ELEVATION **BORING DEPTH** 20 ft.
DRILLING CONTRACTOR Penecore
LATITUDE **LONGITUDE**
DRILLING METHOD Geoprobe 7822DT
GROUND WATER LEVELS:
LOGGED BY BMJ
AT TIME OF DRILLING Not Encountered
NOTES
AT END OF DRILLING Not Encountered

This log is a part of a report by Cornerstone Earth Group, and should not be used as a stand-alone document. This description applies only to the location of the exploration at the time of drilling. Subsurface conditions may differ at other locations and may change at this location with time. The description presented is a simplification of actual conditions encountered. Transitions between soil types may be gradual.

ELEVATION (ft)	DEPTH (ft)	SYMBOL	DESCRIPTION	N-Value (uncorrected) blows per foot	Sample Type and Interval	Sample Submitted for Laboratory Analysis	Percent Recovery (%)	OVM Reading (ppm)	Odors or Discoloration	Notes
	0		4 inches asphalt concrete over 6 inches aggregate base							
			Fat Clay with Sand (CH) moist, dark brown, fine sand					0.3		
			Sandy Lean Clay (CL) moist, tan, fine sand				95	0.2	None	
								0.1		
	5							0.2		
								0.1		
							90		None	
								0		
			Clayey Sand (SC) moist, tan, fine sand					0		
	10							0		
								0		
			Clay with Sand (CL) wet, brown, fine sand, high plasticity				60		None	
								0		
			Poorly Graded Sand (SP) wet, brown to reddish brown, fine sand					0.1		
	15		**Clay (CL)** soft, wet, brown to blue-gray, trace sand					0		
			Silty Sand (SM) loose, wet, dark gray, liquifiable				60	0	None	
			Sandy Lean Clay (CL) very soft to stiff, moist, dark gray, fine sand					0		
	20		Bottom of Boring at 20.0 feet.							

BORING NUMBER EB-3

CORNERSTONE EARTH GROUP

PROJECT NAME 1433-1493 El Camino Real
PROJECT NUMBER 958-1-2
PROJECT LOCATION Santa Clara, CA

DATE STARTED 4/6/17 **DATE COMPLETED** 4/6/17
GROUND ELEVATION **BORING DEPTH** 20 ft.
DRILLING CONTRACTOR Penecore
LATITUDE **LONGITUDE**
DRILLING METHOD Geoprobe 7822DT
GROUND WATER LEVELS:
LOGGED BY BMJ
AT TIME OF DRILLING Not Encountered
NOTES
AT END OF DRILLING Not Encountered

This log is a part of a report by Cornerstone Earth Group, and should not be used as a stand-alone document. This description applies only to the location of the exploration at the time of drilling. Subsurface conditions may differ at other locations and may change at this location with time. The description presented is a simplification of actual conditions encountered. Transitions between soil types may be gradual.

ELEVATION (ft)	DEPTH (ft)	SYMBOL	DESCRIPTION	N-Value (uncorrected) blows per foot	Sample Type and Interval	Sample Submitted for Laboratory Analysis	Percent Recovery (%)	OVM Reading (ppm)	Odors or Discoloration	Notes
	0		4 inches asphalt concrete over 6 inches aggregate base (possible Serpentinite)							
			Fat Clay (CH) moist, dark brown					0		
							80	0	None	
			Sandy Lean Clay (CL) moist, light brown, fine sand					0		
	5									
			Lean Clay (CL) moist, gray-brown mottled					0		
							60		None	
								0		
			Poorly Graded Sand (SP) moist, gray, medium sand, fine gravel							
	10							0		
								0		
			Sandy Lean Clay (CL) soft, moist, brown, fine sand				50		None	
								0		
			Lean Clay (CL) soft, moist, brown					0		
	15							0		
							50	0	None	
			dark gray							
			gray and light gray mottled					0		
	20		Bottom of Boring at 20.0 feet.							

Soil Vapor Well SV-1

CORNERSTONE EARTH GROUP

PROJECT NAME 1433-1493 El Camino Real
PROJECT NUMBER 958-1-2
PROJECT LOCATION Santa Clara, CA

DATE STARTED 4/6/17 **DATE COMPLETED** 4/6/17
GROUND ELEVATION _____ **BORING DEPTH** 5.25 ft.
DRILLING CONTRACTOR Penecore
BORING DIAMETER ft
DRILLING METHOD Geoprobe 7822DT
GROUND WATER LEVELS:
LOGGED BY BMJ
AT TIME OF DRILLING Not Encountered
PERMIT NUMBER _____ **INSPECTOR** _____
AT END OF DRILLING Not Encountered

This log is a part of a report by Cornerstone Earth Group, and should not be used as a stand-alone document. This description applies only to the location of the exploration at the time of drilling. Subsurface conditions may differ at other locations and may change at this location with time. The description presented is a simplification of actual conditions encountered. Transitions between soil types may be gradual.

ELEVATION (ft)	DEPTH (ft)	SYMBOL	DESCRIPTION	Sample Type	Percent Recovery (%)	OVM Reading (ppm)	Odors or Discoloration	Well Details
	0		4 inches asphalt concrete over 6 inches aggregate base					¼" dia. Hi Purity Stainless Steel Tubing with Swagelok Tube Cap
			Sandy Lean Clay (CL) moist, blue-gray to brown, fine to coarse sand, trace fine gravel		85	1.4 4.3 0.1	None	Hydrated Bentonite slurry seal 0-4.75' 2.25 inch diameter borehole to 5.25' Monterey #3 Sand 4.75-5.25' with Porous Stainless Steel Tip @ 5'
	5		Bottom of Boring at 5.3 feet.					
	10							
	15							
	20							

Soil Vapor Well SV-2

CORNERSTONE EARTH GROUP

PROJECT NAME 1433-1493 El Camino Real
PROJECT NUMBER 958-1-2
PROJECT LOCATION Santa Clara, CA

DATE STARTED 4/6/17 **DATE COMPLETED** 4/6/17
GROUND ELEVATION _____ **BORING DEPTH** 5.25 ft.
DRILLING CONTRACTOR Penecore
BORING DIAMETER ft
DRILLING METHOD Geoprobe 7822DT
GROUND WATER LEVELS:
LOGGED BY BMJ
AT TIME OF DRILLING Not Encountered
PERMIT NUMBER _____ **INSPECTOR** _____
AT END OF DRILLING Not Encountered

This log is a part of a report by Cornerstone Earth Group, and should not be used as a stand-alone document. This description applies only to the location of the exploration at the time of drilling. Subsurface conditions may differ at other locations and may change at this location with time. The description presented is a simplification of actual conditions encountered. Transitions between soil types may be gradual.

ELEVATION (ft)	DEPTH (ft)	SYMBOL	DESCRIPTION	Sample Type	Percent Recovery (%)	OVM Reading (ppm)	Odors or Discoloration	Well Details
	0		4 inches asphalt concrete over 6 inches aggregate base					¼" dia. Hi Purity Stainless Steel Tubing with Swagelok Tube Cap
			Fat Clay with Sand (CH) moist, dark gray, fine sand			0		
			Clayey Sand (SC) dry, light brown, fine sand		90	0	None	Hydrated Bentonite slurry seal 0-4.75'; 2.25 inch diameter borehole to 5.25'
			Sandy Lean Clay (CL) moist, orange-brown, fine sand			0		Monterey #3 Sand 4.75-5.25' with Porous Stainless Steel Tip @ 5'
	5		Bottom of Boring at 5.3 feet.					
	10							
	15							
	20							

Soil Vapor Well SV-3

CORNERSTONE EARTH GROUP

PROJECT NAME 1433-1493 El Camino Real
PROJECT NUMBER 958-1-2
PROJECT LOCATION Santa Clara, CA

DATE STARTED 4/6/17 **DATE COMPLETED** 4/6/17
GROUND ELEVATION _____ **BORING DEPTH** 5.25 ft.
DRILLING CONTRACTOR Penecore
BORING DIAMETER ft
DRILLING METHOD Geoprobe 7822DT
GROUND WATER LEVELS:
LOGGED BY BMJ
AT TIME OF DRILLING Not Encountered
PERMIT NUMBER _____ **INSPECTOR** _____
AT END OF DRILLING Not Encountered

This log is a part of a report by Cornerstone Earth Group, and should not be used as a stand-alone document. This description applies only to the location of the exploration at the time of drilling. Subsurface conditions may differ at other locations and may change at this location with time. The description presented is a simplification of actual conditions encountered. Transitions between soil types may be gradual.

ELEVATION (ft)	DEPTH (ft)	SYMBOL	DESCRIPTION	Sample Type	Percent Recovery (%)	OVM Reading (ppm)	Odors or Discoloration	Well Details
	0		4 inches asphalt concrete over 6 inches aggregate base					¼" dia. Hi Purity Stainless Steel Tubing with Swagelok Tube Cap
			Sandy Lean Clay (CL) moist, dark brown, fine sand		80	0	None	Hydrated Bentonite slurry seal 0-4.75'
			light brown			0		2.25 inch diameter borehole to 5.25'
	5					0		Monterey #3 Sand 4.75-5.25' with Porous Stainless Steel Tip @ 5'
			Bottom of Boring at 5.3 feet.					
	10							
	15							
	20							

BORING NUMBER EB-14

CORNERSTONE EARTH GROUP

PROJECT NAME 1433-1493 El Camino Real Additional Investigation
PROJECT NUMBER 958-1-5
PROJECT LOCATION Santa Clara, CA

DATE STARTED 4/4/18 **DATE COMPLETED** 4/4/18
GROUND ELEVATION **BORING DEPTH** 30 ft.
DRILLING CONTRACTOR Penecore
LATITUDE **LONGITUDE**
DRILLING METHOD Direct Push
GROUND WATER LEVELS:
LOGGED BY SDK
AT TIME OF DRILLING Not Encountered
NOTES
AT END OF DRILLING Not Encountered

This log is a part of a report by Cornerstone Earth Group, and should not be used as a stand-alone document. This description applies only to the location of the exploration at the time of drilling. Subsurface conditions may differ at other locations and may change at this location with time. The description presented is a simplification of actual conditions encountered. Transitions between soil types may be gradual.

ELEVATION (ft)	DEPTH (ft)	SYMBOL	DESCRIPTION	N-Value (uncorrected) blows per foot	Sample Type and Interval	Sample Submitted for Laboratory Analysis	Percent Recovery (%)	OVM Reading (ppm)	Odors or Discoloration	Notes
	0		3 inches asphalt concrete over 3 inches aggregate base					0.5		
			Sandy Lean Clay with Gravel (CL) [Fill] stiff, moist, brown, fine to coarse subangular gravel					0.3		
							75	0	None	
								0		
								0		
	5							0		
			Sandy Lean Clay with Gravel (CL) [Fill] stiff, moist, gray-green, fine to coarse subangular gravel					0		
							100	1.8	None	
								5.2		
								4.3		
	10							1.6		
								2.8		
							80	1.8	None	
								2.6		
			Lean Clay (CL) medium stiff, moist, dark brown, some fine sand					3.3		
	15							244		
								870		
							70	68	diesel odor	
			Fat Clay (CH) stiff, moist, dark brown, moderate plasticity					23		
								12.3		
	20					x		10.2		
								5.1		
							100	3.5	diesel odor	
			Sandy Lean Clay (CL) medium stiff to soft, moist, gray to brown, fine sand					4.9		
								14		
	25					x		1439		
								742		
			Clayey Sand (SC) loose, moist, brown, fine to medium rounded sand				100	1258	diesel odor	
								365		
	30					x		55		
			Bottom of Boring at 30.0 feet.							

BORING NUMBER EB-15

CORNERSTONE EARTH GROUP

PROJECT NAME 1433-1493 El Camino Real Additional Investigation
PROJECT NUMBER 958-1-5
PROJECT LOCATION Santa Clara, CA

DATE STARTED 4/4/18 **DATE COMPLETED** 4/4/18
GROUND ELEVATION **BORING DEPTH** 20 ft.
DRILLING CONTRACTOR Penecore
LATITUDE **LONGITUDE**
DRILLING METHOD Direct Push
GROUND WATER LEVELS:
LOGGED BY SDK
AT TIME OF DRILLING Not Encountered
NOTES
AT END OF DRILLING Not Encountered

This log is a part of a report by Cornerstone Earth Group, and should not be used as a stand-alone document. This description applies only to the location of the exploration at the time of drilling. Subsurface conditions may differ at other locations and may change at this location with time. The description presented is a simplification of actual conditions encountered. Transitions between soil types may be gradual.

ELEVATION (ft)	DEPTH (ft)	SYMBOL	DESCRIPTION	N-Value (uncorrected) blows per foot	Sample Type and Interval	Sample Submitted for Laboratory Analysis	Percent Recovery (%)	OVM Reading (ppm)	Odors or Discoloration	Notes
	0		3 inches asphalt concrete over 3 inches aggregate base					0.7		
			Sandy Lean Clay (CL) [reworked native?] hard, moist, dark to light brown				50	12.2	None	
								0.2		
						x		0.6		
	5		**Clayey Sand (SC)** loose, moist, gray to brown, fine to medium rounded sand					2.4		
							50	7.8	diesel odor	
								9.6		
	10		**Sandy Lean Clay (CL)** stiff, moist, light brown, fine sand			x		146		
								2.4		
							50	5.6	diesel odor	
			Clayey Sand (SC) loose, moist, light brown, fine to medium sand becomes dense					0.5		
	15					x		1.9		
								521		
			Lean Clay (CL) soft to very soft, moist, dark gray				50	843	diesel odor	
								52.8		
	20		Bottom of Boring at 20.0 feet.			x		26.3		
	25									
	30									

BORING NUMBER EB-16

CORNERSTONE EARTH GROUP

PROJECT NAME 1433-1493 El Camino Real Additional Investigation
PROJECT NUMBER 958-1-5
PROJECT LOCATION Santa Clara, CA

DATE STARTED 4/4/18 **DATE COMPLETED** 4/4/18
GROUND ELEVATION **BORING DEPTH** 20 ft.
DRILLING CONTRACTOR Penecore
LATITUDE **LONGITUDE**
DRILLING METHOD Direct Push
GROUND WATER LEVELS:
LOGGED BY SDK
AT TIME OF DRILLING Not Encountered
NOTES
AT END OF DRILLING Not Encountered

This log is a part of a report by Cornerstone Earth Group, and should not be used as a stand-alone document. This description applies only to the location of the exploration at the time of drilling. Subsurface conditions may differ at other locations and may change at this location with time. The description presented is a simplification of actual conditions encountered. Transitions between soil types may be gradual.

ELEVATION (ft)	DEPTH (ft)	SYMBOL	DESCRIPTION	N-Value (uncorrected) blows per foot	Sample Type and Interval	Sample Submitted for Laboratory Analysis	Percent Recovery (%)	OVM Reading (ppm)	Odors or Discoloration	Notes
	0		3 inches asphalt concrete over 3 inches aggregate base					0		
			Lean Clay with Sand (CL) stiff, moist, brown to light brown, fine to medium sand					0		
							60	0	None	
								0		
						x		0.2		
	5									
			becomes soft				60	0	None	
	10		**Clayey Sand with Gravel (SC)** dense, moist, gray, brown, and orange, fine to coarse sand, fine subangular to subrounded gravel			x				
			Well-Graded Sand with Gravel (SW) loose, moist, dark brown, fine to coarse rounded sand, fine subrounded gravel				60	0	None	
			Clayey Sand (SC) medium dense, moist, brown, fine to medium sand			x				
	15		**Lean Clay with Sand (CL)** stiff, moist, dark brown							
			becomes soft				60	0	None	
	20		Bottom of Boring at 20.0 feet.			x				
	25									
	30									

BORING NUMBER EB-17

CORNERSTONE EARTH GROUP

PROJECT NAME 1433-1493 El Camino Real Additional Investigation
PROJECT NUMBER 958-1-5
PROJECT LOCATION Santa Clara, CA

DATE STARTED 4/4/18 **DATE COMPLETED** 4/4/18
GROUND ELEVATION **BORING DEPTH** 20 ft.
DRILLING CONTRACTOR Penecore
LATITUDE **LONGITUDE**
DRILLING METHOD Direct Push
GROUND WATER LEVELS:
LOGGED BY SDK
AT TIME OF DRILLING Not Encountered
NOTES
AT END OF DRILLING Not Encountered

This log is a part of a report by Cornerstone Earth Group, and should not be used as a stand-alone document. This description applies only to the location of the exploration at the time of drilling. Subsurface conditions may differ at other locations and may change at this location with time. The description presented is a simplification of actual conditions encountered. Transitions between soil types may be gradual.

ELEVATION (ft)	DEPTH (ft)	SYMBOL	DESCRIPTION	N-Value (uncorrected) blows per foot	Sample Type and Interval	Sample Submitted for Laboratory Analysis	Percent Recovery (%)	OVM Reading (ppm)	Odors or Discoloration	Notes
	0		3 inches asphalt concrete over 3 inches aggregate base							
			Sandy Lean Clay with Gravel (CL) [Fill] stiff, moist, brown, fine to medium sand, fine subangular gravel				60	0	None	
	5					x				
							60	0	None	
	10					x				
			becomes softer					1.2		
								1.7		
								2.5		
			Sandy Lean Clay (CL) stiff, moist, dark brown, fine to medium sand					240	diesel stain	
	15					x				
								321		
			Lean Clay with Sand (CL) soft, moist, dark brown, low to moderate plasticity					384	diesel odor	
								49.5		
			Fat Clay (CH) stiff, moist, dark brown, high plasticity					17		
	20					x				
			Bottom of Boring at 20.0 feet.							
	25									
	30									

BORING NUMBER EB-18

CORNERSTONE EARTH GROUP

PROJECT NAME 1433-1493 El Camino Real Additional Investigation
PROJECT NUMBER 958-1-5
PROJECT LOCATION Santa Clara, CA

DATE STARTED 4/4/18 **DATE COMPLETED** 4/4/18
GROUND ELEVATION **BORING DEPTH** 20 ft.
DRILLING CONTRACTOR Penecore
LATITUDE **LONGITUDE**
DRILLING METHOD Direct Push
GROUND WATER LEVELS:
LOGGED BY SDK
AT TIME OF DRILLING Not Encountered
NOTES
AT END OF DRILLING Not Encountered

This log is a part of a report by Cornerstone Earth Group, and should not be used as a stand-alone document. This description applies only to the location of the exploration at the time of drilling. Subsurface conditions may differ at other locations and may change at this location with time. The description presented is a simplification of actual conditions encountered. Transitions between soil types may be gradual.

ELEVATION (ft)	DEPTH (ft)	SYMBOL	DESCRIPTION	N-Value (uncorrected) blows per foot	Sample Type and Interval	Sample Submitted for Laboratory Analysis	Percent Recovery (%)	OVM Reading (ppm)	Odors or Discoloration	Notes
	0		3 inches asphalt concrete over 3 inches aggregrate base							
			Poorly Gradd Sand with Gravel (SP) [Fill] loose, dry, white and light gray, fine sand, fine subangular gravel				30	0	None	
			Lean Clay with Sand (CL) stiff, moist, brown, fine sand							
	5					x				
							60	0	None	
	10					x				
			Sandy Lean Clay (CL) stiff, moist, brown, fine to coarse sand, trace fine subrounded gravel				30	0	None	
	15					x				
			Lean Clay (CL) medium stiff, moist, brown, trace fine sand				60	0	None	
			Fat Clay (CH) hard, moist, dark brown, high plasticity			x				
	20		Bottom of Boring at 20.0 feet.							
	25									
	30									

BORING NUMBER EB-19

CORNERSTONE EARTH GROUP

PROJECT NAME 1433-1493 El Camino Real Additional Investigation
PROJECT NUMBER 958-1-5
PROJECT LOCATION Santa Clara, CA

DATE STARTED 4/4/18 **DATE COMPLETED** 4/4/18
GROUND ELEVATION **BORING DEPTH** 20 ft.
DRILLING CONTRACTOR Penecore
LATITUDE **LONGITUDE**
DRILLING METHOD Direct Push
GROUND WATER LEVELS:
LOGGED BY SDK
AT TIME OF DRILLING Not Encountered
NOTES
AT END OF DRILLING Not Encountered

This log is a part of a report by Cornerstone Earth Group, and should not be used as a stand-alone document. This description applies only to the location of the exploration at the time of drilling. Subsurface conditions may differ at other locations and may change at this location with time. The description presented is a simplification of actual conditions encountered. Transitions between soil types may be gradual.

ELEVATION (ft)	DEPTH (ft)	SYMBOL	DESCRIPTION	N-Value (uncorrected) blows per foot	Sample Type and Interval	Sample Submitted for Laboratory Analysis	Percent Recovery (%)	OVM Reading (ppm)	Odors or Discoloration	Notes
	0		3 inches asphalt concrete over 3 inches aggregate base					0		
			Sandy Lean Clay with Gravel (CL) [Fill] stiff, moist, brown, fine to coarse sand, fine subangular gravel				70	1	None	
								0.8		
	5					x		0.2		
							60	0	None	
	10					x				
			Sandy Lean Clay (CL) soft to medium stiff, moist, brown, fine to medium sand				60	0	None	
	15		**Clayey Sand (SC)** loose, moist, brown, fine to coarse sand					15		
			Lean Clay (CL) stiff, moist, dark brown, trace fine sand, low plasticity			x	50	448	diesel odor	
								130		
	20		**Fat Clay (CH)** hard, moist, dark brown, high plasticity			x		55		
			Bottom of Boring at 20.0 feet.							
	25									
	30									

BORING NUMBER EB-20

CORNERSTONE EARTH GROUP

PROJECT NAME 1433-1493 El Camino Real Additional Investigation
PROJECT NUMBER 958-1-5
PROJECT LOCATION Santa Clara, CA

DATE STARTED 4/4/18 **DATE COMPLETED** 4/4/18
GROUND ELEVATION **BORING DEPTH** 20 ft.
DRILLING CONTRACTOR Penecore
LATITUDE **LONGITUDE**
DRILLING METHOD Direct Push
GROUND WATER LEVELS:
LOGGED BY SDK
AT TIME OF DRILLING Not Encountered
NOTES
AT END OF DRILLING Not Encountered

This log is a part of a report by Cornerstone Earth Group, and should not be used as a stand-alone document. This description applies only to the location of the exploration at the time of drilling. Subsurface conditions may differ at other locations and may change at this location with time. The description presented is a simplification of actual conditions encountered. Transitions between soil types may be gradual.

ELEVATION (ft)	DEPTH (ft)	SYMBOL	DESCRIPTION	N-Value (uncorrected) blows per foot	Sample Type and Interval	Sample Submitted for Laboratory Analysis	Percent Recovery (%)	OVM Reading (ppm)	Odors or Discoloration	Notes
	0		3 inches asphalt concrete over 3 inches aggregate base							
			Sandy Lean Clay with Gravel (CL) [Fill] stiff, moist, light brown, fine to coarse sand, fine subangular gravel				100	0	None	
	5					x				
							40	0	None	
			Sandy Lean Clay (CL) medium stiff, moist, brown, fine sand							
	10		**Well-Graded Sand with Clay and Gravel (SW-SC)** medium dense, moist, brown, fine to coarse sand, fine subangular to subrounded gravel			x		0.6		
			Poorly Graded Sand with Clay (SP-SC) loose, moist, brown, medium sand				60	1.5 0.9	None	
			Clayey Sand (SC) dense, moist, brown, fine sand					0.1		
	15		**Lean Clay (CL)** medium stiff, moist, dark brown, trace fine sand			x		4.2 263		
							50	7.7	diesel odor	
								19.2		
			Fat Clay (CH) hard, moist, dark brown			x		2.3		
	20		Bottom of Boring at 20.0 feet.							
	25									
	30									

BORING NUMBER EB-21

CORNERSTONE EARTH GROUP

PROJECT NAME 1433-1493 El Camino Real Additional Investigation
PROJECT NUMBER 958-1-5
PROJECT LOCATION Santa Clara, CA

DATE STARTED 4/4/18 **DATE COMPLETED** 4/4/18
GROUND ELEVATION **BORING DEPTH** 20 ft.
DRILLING CONTRACTOR Penecore
LATITUDE **LONGITUDE**
DRILLING METHOD Direct Push
GROUND WATER LEVELS:
LOGGED BY SDK
AT TIME OF DRILLING Not Encountered
NOTES
AT END OF DRILLING Not Encountered

This log is a part of a report by Cornerstone Earth Group, and should not be used as a stand-alone document. This description applies only to the location of the exploration at the time of drilling. Subsurface conditions may differ at other locations and may change at this location with time. The description presented is a simplification of actual conditions encountered. Transitions between soil types may be gradual.

ELEVATION (ft)	DEPTH (ft)	SYMBOL	DESCRIPTION	N-Value (uncorrected) blows per foot	Sample Type and Interval	Sample Submitted for Laboratory Analysis	Percent Recovery (%)	OVM Reading (ppm)	Odors or Discoloration	Notes
	0		3 inches asphalt concrete over 3 inches aggregrate base							
			Lean Clay with Sand (CL) stiff, moist, dark brown, fine sand				80	0	None	
			Lean Clay with Sand (CL) stiff, moist, light brown, fine to medium sand, trace fine subangular to subrounded gravel			x				
	5						80	0	None	
	10		**Well-Graded Sand (SW)** medium dense, moist, fine to coarse rounded sand			x				
			Clayey Sand (SC) medium dense, moist, brown, fine to medium sand				60	0	None	
	15		**Sandy Lean Clay (CL)** medium stiff, moist, light brown			x				
			Clayey Sand (SC) dense, moist, reddish brown, fine sand							
			Lean Clay with Sand (CL) stiff, moist, brown				50	0	None	
	20		**Fat Clay (CH)** hard, moist, dark brown, high plasticity			x				
			Bottom of Boring at 20.0 feet.							
	25									
	30									

BORING NUMBER EB-22

CORNERSTONE EARTH GROUP

PROJECT NAME 1433-1493 El Camino Real Additional Investigation
PROJECT NUMBER 958-1-5
PROJECT LOCATION Santa Clara, CA

DATE STARTED 4/4/18 **DATE COMPLETED** 4/4/18
GROUND ELEVATION **BORING DEPTH** 20 ft.
DRILLING CONTRACTOR Penecore
LATITUDE **LONGITUDE**
DRILLING METHOD Direct Push
GROUND WATER LEVELS:
LOGGED BY SDK
AT TIME OF DRILLING Not Encountered
NOTES
AT END OF DRILLING Not Encountered

This log is a part of a report by Cornerstone Earth Group, and should not be used as a stand-alone document. This description applies only to the location of the exploration at the time of drilling. Subsurface conditions may differ at other locations and may change at this location with time. The description presented is a simplification of actual conditions encountered. Transitions between soil types may be gradual.

ELEVATION (ft)	DEPTH (ft)	SYMBOL	DESCRIPTION	N-Value (uncorrected) blows per foot	Sample Type and Interval	Sample Submitted for Laboratory Analysis	Percent Recovery (%)	OVM Reading (ppm)	Odors or Discoloration	Notes
	0		3 inches asphalt concrete over 3 inches aggregrate base							
			Clayey Sand with Gravel (SC) [Fill] medium dense, moist, brown to reddish brown, fine to coarse sand, fine subangular gravel				60	0	None	
			Sandy Lean Clay (CL) medium stiff to soft, moist, gray to brown			x				
	5							0		
								0		
							60	93	None	
								150		
			Sandy Lean Clay with Gravel (CL) hard, moist, brown, fine to coarse sand, fine subrounded gravel			x		7.5		
	10							3.8		
			Sandy Lean Clay with Gravel (CL) stiff, moist, dark to light brown, fine to medium sand, fine subrounded gravel					2.8		
							60		None	
								1.6		
								1.0		
	15		**Lean Clay with Sand (CL)** medium stiff, moist, dark gray, fine sand					164		
						x		796		
							50		None	
								98		
			Fat Clay (CH) stiff, moist, dark brown, high plasticity					23.5		
	20					x				
			Bottom of Boring at 20.0 feet.							
	25									
	30									

BORING NUMBER EB-23

CORNERSTONE EARTH GROUP

PROJECT NAME 1433-1493 El Camino Real Additional Investigation
PROJECT NUMBER 958-1-5
PROJECT LOCATION Santa Clara, CA

DATE STARTED 4/4/18 **DATE COMPLETED** 4/4/18
GROUND ELEVATION **BORING DEPTH** 20 ft.
DRILLING CONTRACTOR Penecore
LATITUDE **LONGITUDE**
DRILLING METHOD Direct Push
GROUND WATER LEVELS:
LOGGED BY SDK
AT TIME OF DRILLING Not Encountered
NOTES
AT END OF DRILLING Not Encountered

This log is a part of a report by Cornerstone Earth Group, and should not be used as a stand-alone document. This description applies only to the location of the exploration at the time of drilling. Subsurface conditions may differ at other locations and may change at this location with time. The description presented is a simplification of actual conditions encountered. Transitions between soil types may be gradual.

ELEVATION (ft)	DEPTH (ft)	SYMBOL	DESCRIPTION	N-Value (uncorrected) blows per foot	Sample Type and Interval	Sample Submitted for Laboratory Analysis	Percent Recovery (%)	OVM Reading (ppm)	Odors or Discoloration	Notes
	0		3 inches asphalt concrete over 3 inches aggregrate base							
			Lean Clay (CL) [Fill] stiff, moist, dark brown, trace sand				70	0	None	
			Lean Clay with Sand (CL) [Fill] stiff, moist, light brown, fine to medium sand, trace gravel			x				
	5		**Sandy Lean Clay (CL) [Fill]** medium stifff, moist, light brown and gray, fine to medium sand				60	0	None	
			Poorly Graded Sand with Clay and Gravel (SP-SC) [Fill] medium dense to loose, moist, brown, fine to medium sand, subangular to angular gravel			x				
	10		**Well-Graded Sand with Clay (SW-SC)** medium dense, moist, reddish brown, fine to coarse sand				30	0	None	
	15		**Lean Clay (CL)** medium stiff, moist, dark gray, trace sand			x	60	0	None	
			Fat Clay (CH) stiff, moist, dark brown, high plasticity			x				
	20		Bottom of Boring at 20.0 feet.							
	25									
	30									

APPENDIX D – SOIL VAPOR PROBE CONSTRUTION DETAILS, SOIL VAPOR SAMPLING FIELD NOTES, SOIL VAPOR SAMPLE TRAIN LEAK TEST CALCULATION

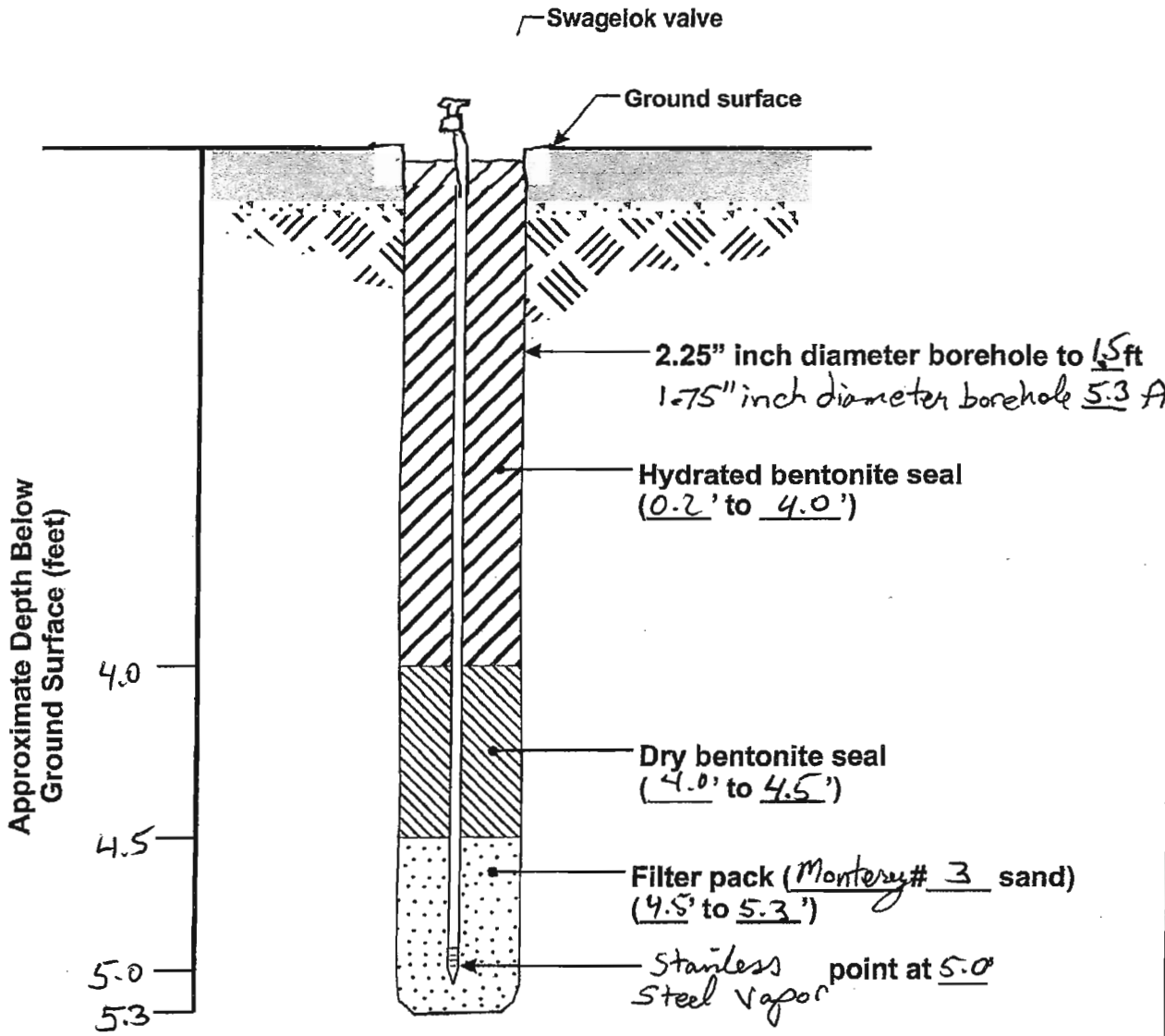

Soil Vapor Probe Construction Detail: Typical

Not to Scale

Near round vault (sewer?)

CORNERSTONE EARTH GROUP	Soil Vapor Probe Construction Detail	Project Number
	SV-1	Figure Number
		Date / Drawn By FLL

1433 ECR

2

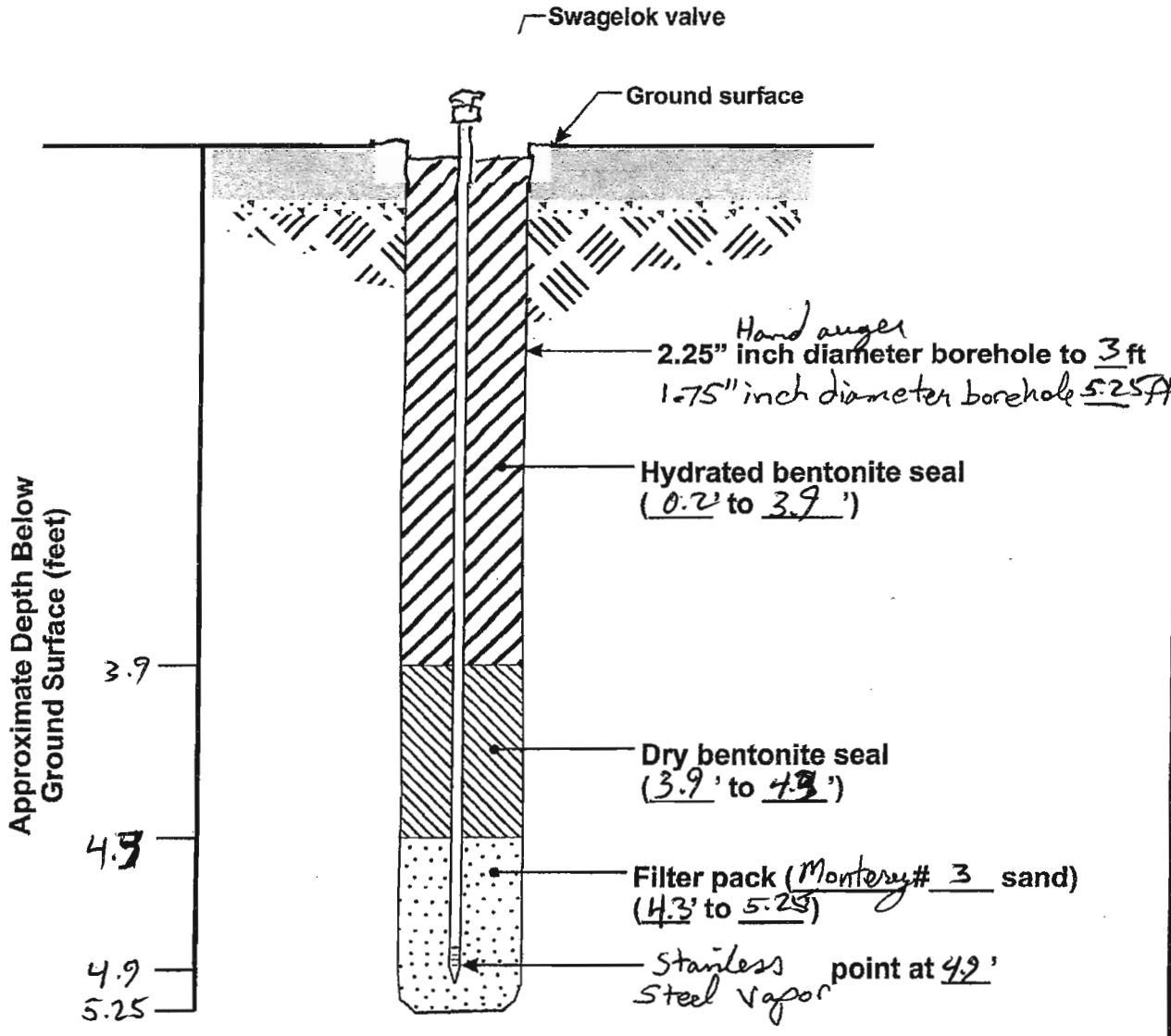

Soil Vapor Probe Construction Detail: Typical

Not to Scale

Near desks (lazy bay) & clarifiers beneath desks

CORNERSTONE EARTH GROUP	Soil Vapor Probe Construction Detail	Project Number
	SV-2	Figure Number
		Date / Drawn By FLL

1433 ECR

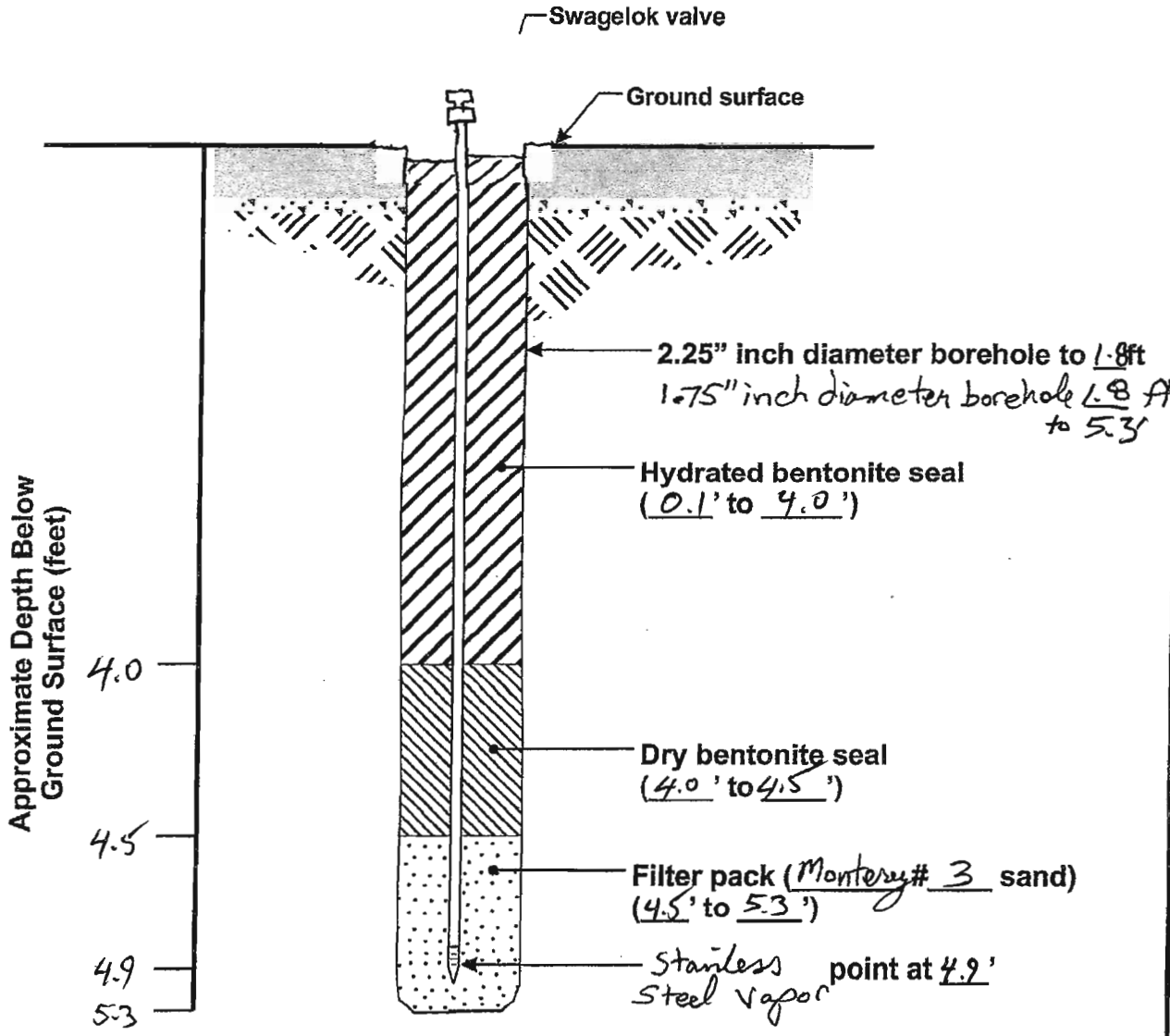

Soil Vapor Probe Construction Detail: Typical

Not to Scale

Near Dynamometer former location

CORNERSTONE EARTH GROUP	Soil Vapor Probe Construction Detail	Project Number
	SV-3	Figure Number
		Date / Drawn By FLL

1463 El Camino Real

3

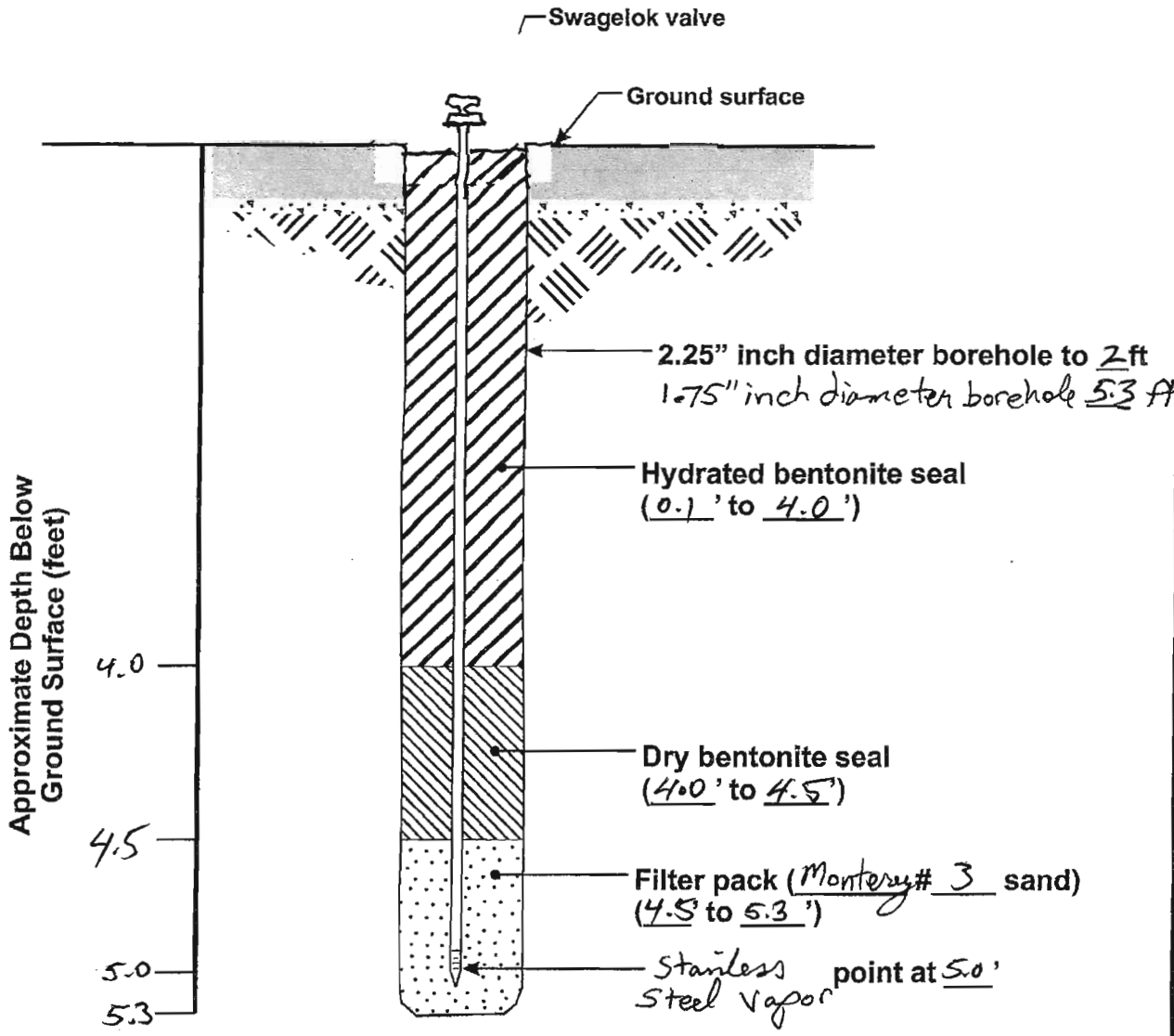

Soil Vapor Probe Construction Detail: Typical

Not to Scale

In former car wash

CORNERSTONE EARTH GROUP	Soil Vapor Probe Construction Detail	Project Number
	SV-4	Figure Number
		Date / Drawn By FLL

Soil Vapor/Sub-Slab Sampling Data Sheet

Project Number: CEG-146
Date: 4-6-18
Client:
Facility:
Sampler: Ross Tinline
Address: 1433-1493 El Camino Real
Weather: 0.53" of Rain has fallen but probed are all covered by roofs & concrete

Note: All vacuum (Vac) readings in "Hg

Location: SV-1 3 Purge vol calculation.

Purge Calculation & Target Volume: 2 rings sand = 308.8mL x 2 x 37% porosity = 228.5mL
1 ring dry bentonite = 308.8mL x 50% porosity = 154.4mL 8' 1/4" tubing = 6mL/ft x 8 = 48mL
= 1292.7mL or reduction of 6.5"Hg in 6L purge con. ~8.6mi

	Start Time	Initial Vac	End Time	Final Vac	Back Vac	Notes: (Passed / completed / purge volume removed)
Vac Test	11:56	25.23/25.8	:			Held tight (QC Fittings of manifold.
Purge	12:08	30	12:17	23.5	0.01	Completed.
Sampling	12:18	28.5	12:24	4.5	See below	

Measurements during sampling - Drops IPA in Shroud = 10

Time	1219	1220	1221	1222	1223	1224	END
Vac	24 22	20 18	16 14	12 9.8	8 6	4.5	
PID ppmv	0.9 5.4	7.3 7.6	8.2 4.4	14.3 8.4	7.8 12.5	13.5	
Back Vac	0.02	0.02	0.02	0.02	0.01	0.01	

Notes: or additional measurements

Location: SV-2

Purge Calculation & Target Volume: Purge as above or reduction of 1292.7mL or 6.5"Hg loss in 6L purge con

	Start Time	Initial Vac	End Time	Final Vac	Back Vac	Notes: (Passed / completed / purge volume removed)
Vac Test	12:40	25.27	12:50	25.29		Held tight.
Purge	12:50	23.5	12:58	17.0	0.03	Completed.
Sampling	13:00	28.5	13:06	3.0	See below	

Measurements during sampling - Drops IPA in Shroud = 9

Time		1301		1302		1303		1304		1305		1306	END
Vac	24	22	20	18	16	13.5	11.5	10	8	6.5	5.0	3.0	
PID ppmv	1.0	1.1	1.4	2.1	3.4	4.9	5.6	6	7.4	9.7	9.7	10.7	
Back Vac	0.03		0.03			0.03			0.03		0.03		

Notes: or additional measurements

Location: SV-4 in car wash.

Purge Calculation & Target Volume: Purge as above.

	Start Time	Initial Vac	End Time	Final Vac	Back Vac	Notes: (Passed / completed / purge volume removed)
Vac Test	13:13	23.91	1325	23.95		Held tight
Purge	1326	17	1336	10.5	0.05	completed purge
Sampling	13:37	29.8	13:44	4.0	See below	

Measurements during sampling - Drops IPA in Shroud = 14

Time	1338	1339	1340	1341	1342	1343	1344	END
Vac	25	20.5	17	13	9	6	4.0	
PID ppmv	0.2	0.5	1.2	1.6	1.9	2.6	4.1	
Back Vac		0.04			0.04		0.04	

Notes: or additional measurements

Soil Vapor/Sub-Slab Sampling Data Sheet

Project Number: CEG-146
Date: 4-6-18
Client:
Facility:
Sampler: Ross Tinline
Address: 1433-1493 El Camino Real Santa Clara
Weather: Overcast.

Location: SV-3

Note: All vacuum (Vac) readings in "Hg

Purge Calculation & Target Volume: Purge as previous of 1292.7 mL or reduction of 6.5" Hg in 6L purge can

	Start Time	Initial Vac	End Time	Final Vac	Back Vac	Notes: (Passed / completed / purge volume removed)
Vac Test	13:57	24.51	14:08	24.61		Held tight & increased vac due to T°Δ.
Purge	14:08	20	14:19	13.5	0.04	Completed.
Sampling	14:21	29.5	14:27	4.0	See below	

Measurements during sampling - Drops IPA in Shroud = 10

Time	1422		1423		1424		1425		1426		1427
Vac	24	22	19	17.5	15	13	11	9	7	5.5	4.0
PID ppmv	1.3	1.6	2.2	3.5	4.6	6.2	6.4	6.8	8.0	7.7	8.1
Back Vac			0.03		0.04			0.03			0.03

Notes: or additional measurements

Shroud sample

28.5 →

← 8" Hg.

Location:

Purge Calculation & Target Volume:

	Start Time	Initial Vac	End Time	Final Vac	Back Vac	Notes: (Passed / completed / purge volume removed)
Vac Test	:		:			
Purge	:		:			
Sampling	:		:		See below	

Measurements during sampling - Drops IPA in Shroud = ____

Time																		
Vac																		
PID ppmv																		
Back Vac																		

Notes: or additional measurements

Location:

Purge Calculation & Target Volume:

	Start Time	Initial Vac	End Time	Final Vac	Back Vac	Notes: (Passed / completed / purge volume removed)
Vac Test	:		:			
Purge	:		:			
Sampling	:		:		See below	

Measurements during sampling - Drops IPA in Shroud = ____

Time																		
Vac																		
PID ppmv																		
Back Vac																		

Notes: or additional measurements

APPENDIX E – LABORATORY ANALYTICAL REPORTS

Cornerstone Earth Group
1259 Oakmead Parkway
Sunnyvale, California 94035
Tel: (408) 245-4600
Fax: (408) 245-4620

RE: 1433-1493 El Camino Real

Work Order No.: 1804039 Rev: 2

Dear Peter Langtry:

Torrent Laboratory, Inc. received 20 sample(s) on April 04, 2018 for the analyses presented i the following Report.
As requested on the Chain of Custody, five samples were placed on hold.

All data for associated QC met EPA or laboratory specification(s) except where noted in the case narrative.

Torrent Laboratory, Inc. is certified by the State of California, ELAP #1991. If you have any questions regarding these test results, please feel free to contact the Project Management

Patti L Sandrock
QA Officer

April 09, 2018
Date

Date: 4/9/2018

Client: Cornerstone Earth Group

Project: 1433-1493 El Camino Real

Work Order: 1804039

CASE NARRATIVE

No issues encountered with the receiving, preparation, analysis or reporting of the results associated with this work order.

Unless otherwise indicated in the following narrative, no results have been method and/or field blank corrected.

Reported results relate only to the items/samples tested by the laboratory.

This report shall not be reproduced, except in full, without the written approval of Torrent Analytic Inc.

Note: for 8260B/GCMS-GRO: Final result & MDL/PQL (Detection Limit/Reporting limit) have been corrected for actual mass removed from the Encore container.

Analytical Comment for SW8260B, QC Preparation Batch ID 1104079, Note:The % recovery for the 4-Bromofluorobenzene surrogate is outside of laboratory control limits (high bias) in the Method Blank and LCS/LCSD. No Gasoline was present in the method blank. The LCS/LCSD Gasoline was within both % recovery and % RPD limits. All sample surrogates were within contro limits. No corrective action is required.

REVISIONS:

Revised to report the 1000X dilution for sample EB-20(16.0-16.5) for both 8260B and TPH-GRO. was detemined that this was a more appropriate dilution to report for than the one previously reported.

Rev. 1 (4/10/18)

Report revised to include data for sample 004 and 012.

Rev. 2 (4/13/18)

Sample Result Summary

Report prepared for: Peter Langtry
Cornerstone Earth Group

Date Received: 04/04/18
Date Reported: 04/09/18

EB-20 (4.5-5) 1804039-001

Parameters:	Analysis Method	DF	MDL	PQL	Results	Unit
tert-Butanol	SW8260B	1	13	57	344	ug/Kg

EB-20 (9.5-10) 1804039-002

Parameters:	Analysis Method	DF	MDL	PQL	Results	Unit
TPH as Diesel	SW8015B	1	0.85	2.0	2.31	mg/Kg
tert-Butanol	SW8260B	1	13	57	310	ug/Kg

EB-20 (16-16.5) 1804039-003

Parameters:	Analysis Method	DF	MDL	PQL	Results	Unit
TPH(Gasoline)	8260TPH	1000	46000	110000	1380000	ug/Kg
TPH as Diesel	SW8015B	1	0.85	2.0	9.81	mg/Kg
1,3,5-Trimethylbenzene	SW8260B	1000	1700	11000	15200	ug/Kg
1,2,4-Trimethylbenzene	SW8260B	1000	1400	11000	49300	ug/Kg
2-Butanone	SW8260B	1000	2400	11000	27500	ug/Kg

EB-20 (19.5-20) 1804039-004

Parameters:	Analysis Method	DF	MDL	PQL	Results	Unit
TPH(Gasoline)	8260TPH	100	4300	10000	5590	ug/Kg

EB-18 (4.5-5) 1804039-005

Parameters:	Analysis Method	DF	MDL	PQL	Results	Unit
TPH as Diesel	SW8015B	1	0.85	2.0	2.00	mg/Kg
tert-Butanol	SW8260B	1	11	46	57.3	ug/Kg

EB-18 (9.5-10) 1804039-006

Parameters:	Analysis Method	DF	MDL	PQL	Results	Unit
tert-Butanol	SW8260B	1	11	46	67.5	ug/Kg

EB-18 (14.5-15) 1804039-007

Parameters:	Analysis Method	DF	MDL	PQL	Results	Unit
TPH as Diesel	SW8015B	1	0.85	2.0	3.05	mg/Kg

EB-22 (4.5-5) 1804039-009

Parameters:	Analysis Method	DF	MDL	PQL	Results	Unit
TPH as Diesel	SW8015B	1	0.85	2.0	2.97	mg/Kg
tert-Butanol	SW8260B	1	17	75	422	ug/Kg

Sample Result Summary

Report prepared for: Peter Langtry
Cornerstone Earth Group

Date Received: 04/04/18
Date Reported: 04/09/18

EB-22 (9.5-10) 1804039-010

Parameters:	Analysis Method	DF	MDL	PQL	Results	Unit
TPH(Gasoline)	8260TPH	100	4300	10000	47500	ug/Kg
TPH as Diesel	SW8015B	1	0.85	2.0	30.5	mg/Kg
1,2,4-Trimethylbenzene	SW8260B	100	140	1000	3130	ug/Kg

EB-22 (16-16.5) 1804039-011

Parameters:	Analysis Method	DF	MDL	PQL	Results	Unit
TPH(Gasoline)	8260TPH	100	4700	11000	943000	ug/Kg
TPH as Diesel	SW8015B	2	1.7	4.0	55.9	mg/Kg
Toluene	SW8260B	100	200	1100	16800	ug/Kg
Ethyl Benzene	SW8260B	100	180	1100	14800	ug/Kg
m,p-Xylene	SW8260B	100	340	1100	48500	ug/Kg
o-Xylene	SW8260B	100	190	1100	22300	ug/Kg
Isopropyl Benzene	SW8260B	100	170	1100	1820	ug/Kg
n-Propylbenzene	SW8260B	100	170	1100	5980	ug/Kg
1,3,5-Trimethylbenzene	SW8260B	100	170	1100	7880	ug/Kg
1,2,4-Trimethylbenzene	SW8260B	100	150	1100	28700	ug/Kg
n-Butylbenzene	SW8260B	100	160	1100	1910	ug/Kg
Naphthalene	SW8260B	100	180	1100	3050	ug/Kg
2-Butanone	SW8260B	100	250	1100	13000	ug/Kg

EB-22 (19.5-20) 1804039-012

Parameters:	Analysis Method	DF	MDL	PQL	Results	Unit
TPH(Gasoline)	8260TPH	1	53	120	896	ug/Kg
Toluene	SW8260B	1	2.2	12	26.2	ug/Kg
m,p-Xylene	SW8260B	1	3.8	12	96.3	ug/Kg
o-Xylene	SW8260B	1	2.1	12	37.9	ug/Kg
Isopropyl Benzene	SW8260B	1	1.9	12	19.6	ug/Kg
n-Propylbenzene	SW8260B	1	1.9	12	29.0	ug/Kg
1,2,4-Trimethylbenzene	SW8260B	1	1.6	12	33.0	ug/Kg

EB-23 (4.5-5) 1804039-013

Parameters:	Analysis Method	DF	MDL	PQL	Results	Unit
TPH as Diesel	SW8015B	1	0.85	2.0	2.38	mg/Kg
tert-Butanol	SW8260B	1	13	57	87.8	ug/Kg

Sample Result Summary

Report prepared for: Peter Langtry
Cornerstone Earth Group

Date Received: 04/04/18
Date Reported: 04/09/18

EB-23 (9.5-10) 1804039-014

Parameters:	Analysis Method	DF	MDL	PQL	Results	Unit
TPH as Diesel	SW8015B	1	0.85	2.0	2.88	mg/Kg
tert-Butanol	SW8260B	1	13	57	136	ug/Kg

EB-23 (14.5-15) 1804039-015

Parameters:	Analysis Method	DF	MDL	PQL	Results	Unit
TPH as Diesel	SW8015B	1	0.85	2.0	2.46	mg/Kg
tert-Butanol	SW8260B	1	10	45	90.0	ug/Kg

EB-21 (4.5-5) 1804039-017

Parameters:	Analysis Method	DF	MDL	PQL	Results	Unit
TPH as Diesel	SW8015B	1	0.85	2.0	4.38	mg/Kg

EB-21 (9.5-10) 1804039-018

Parameters:	Analysis Method	DF	MDL	PQL	Results	Unit
TPH as Diesel	SW8015B	1	0.85	2.0	2.15	mg/Kg

EB-21 (14.5-15) 1804039-019

Parameters:	Analysis Method	DF	MDL	PQL	Results	Unit
TPH as Diesel	SW8015B	1	0.85	2.0	5.98	mg/Kg

Torrent LABORATORY, INC.

SAMPLE RESULTS

Report prepared for: Peter Langtry
Cornerstone Earth Group

Date/Time Received: 04/04/18, 4:15 pm
Date Reported: 04/09/18

Client Sample ID:	EB-20 (4.5-5)	**Lab Sample ID:**	1804039-001A
Project Name/Location:	1433-1493 El Camino Real	**Sample Matrix:**	Soil
Project Number:	958-1-5		
Date/Time Sampled:	04/04/18 / 12:53		
SDG:			

Prep Method:	3546_TPH	**Prep Batch Date/Time:**	4/5/18 6:00:00PM
Prep Batch ID:	1104005	**Prep Analyst:**	SNARASIMHAN

Parameters:	Analysis Method	DF	MDL	PQL	Results	Q	Units	Analyzed	Time	By	Analytical Batch
TPH as Diesel	SW8015B	1	0.85	2.0	ND		mg/Kg	04/06/18	13:30	mk	430765
			Acceptance Limits								
Pentacosane (S)	SW8015B		59 - 129		**82.4**		%	04/06/18	13:30	mk	430765

Torrent LABORATORY, INC.

SAMPLE RESULTS

Report prepared for: Peter Langtry
Cornerstone Earth Group

Date/Time Received: 04/04/18, 4:15 pm
Date Reported: 04/09/18

Client Sample ID:	EB-20 (4.5-5)	**Lab Sample ID:**	1804039-001B
Project Name/Location:	1433-1493 El Camino Real	**Sample Matrix:**	Soil
Project Number:	958-1-5		
Date/Time Sampled:	04/04/18 / 12:53		
SDG:			

Prep Method:	5035	**Prep Batch Date/Time:**	4/6/18	6:39:00PM
Prep Batch ID:	1104070	**Prep Analyst:**	NPAR	

Parameters:	Analysis Method	DF	MDL	PQL	Results	Q	Units	Analyzed	Time	By	Analytical Batch
Dichlorodifluoromethane	SW8260B	1	1.4	11	ND		ug/Kg	04/07/18	3:09	NP	430812
Chloromethane	SW8260B	1	2.1	11	ND		ug/Kg	04/07/18	3:09	NP	430812
Vinyl Chloride	SW8260B	1	2.3	11	ND		ug/Kg	04/07/18	3:09	NP	430812
Bromomethane	SW8260B	1	3.1	11	ND		ug/Kg	04/07/18	3:09	NP	430812
Chloroethane	SW8260B	1	3.4	11	ND		ug/Kg	04/07/18	3:09	NP	430812
Trichlorofluoromethane	SW8260B	1	2.4	11	ND		ug/Kg	04/07/18	3:09	NP	430812
1,1-Dichloroethene	SW8260B	1	2.3	11	ND		ug/Kg	04/07/18	3:09	NP	430812
Freon 113	SW8260B	1	2.1	11	ND		ug/Kg	04/07/18	3:09	NP	430812
Methylene Chloride	SW8260B	1	8.1	11	ND		ug/Kg	04/07/18	3:09	NP	430812
trans-1,2-Dichloroethene	SW8260B	1	2.4	11	ND		ug/Kg	04/07/18	3:09	NP	430812
MTBE	SW8260B	1	2.7	11	ND		ug/Kg	04/07/18	3:09	NP	430812
tert-Butanol	SW8260B	1	13	57	**344**		ug/Kg	04/07/18	3:09	NP	430812
Diisopropyl ether (DIPE)	SW8260B	1	2.6	11	ND		ug/Kg	04/07/18	3:09	NP	430812
1,1-Dichloroethane	SW8260B	1	2.5	11	ND		ug/Kg	04/07/18	3:09	NP	430812
ETBE	SW8260B	1	2.6	11	ND		ug/Kg	04/07/18	3:09	NP	430812
cis-1,2-Dichloroethene	SW8260B	1	2.5	11	ND		ug/Kg	04/07/18	3:09	NP	430812
2,2-Dichloropropane	SW8260B	1	2.2	11	ND		ug/Kg	04/07/18	3:09	NP	430812
Bromochloromethane	SW8260B	1	2.7	11	ND		ug/Kg	04/07/18	3:09	NP	430812
Chloroform	SW8260B	1	2.7	11	ND		ug/Kg	04/07/18	3:09	NP	430812
Carbon Tetrachloride	SW8260B	1	2.3	11	ND		ug/Kg	04/07/18	3:09	NP	430812
1,1,1-Trichloroethane	SW8260B	1	2.4	11	ND		ug/Kg	04/07/18	3:09	NP	430812
1,1-Dichloropropene	SW8260B	1	2.3	11	ND		ug/Kg	04/07/18	3:09	NP	430812
Benzene	SW8260B	1	2.5	11	ND		ug/Kg	04/07/18	3:09	NP	430812
TAME	SW8260B	1	2.6	11	ND		ug/Kg	04/07/18	3:09	NP	430812
1,2-Dichloroethane	SW8260B	1	2.6	11	ND		ug/Kg	04/07/18	3:09	NP	430812
Trichloroethylene	SW8260B	1	2.1	11	ND		ug/Kg	04/07/18	3:09	NP	430812
Dibromomethane	SW8260B	1	2.1	11	ND		ug/Kg	04/07/18	3:09	NP	430812
1,2-Dichloropropane	SW8260B	1	2.1	11	ND		ug/Kg	04/07/18	3:09	NP	430812
Bromodichloromethane	SW8260B	1	2.2	11	ND		ug/Kg	04/07/18	3:09	NP	430812
cis-1,3-Dichloropropene	SW8260B	1	1.8	11	ND		ug/Kg	04/07/18	3:09	NP	430812
Toluene	SW8260B	1	2.1	11	ND		ug/Kg	04/07/18	3:09	NP	430812
Tetrachloroethylene	SW8260B	1	1.9	11	ND		ug/Kg	04/07/18	3:09	NP	430812
trans-1,3-Dichloropropene	SW8260B	1	1.9	11	ND		ug/Kg	04/07/18	3:09	NP	430812
1,1,2-Trichloroethane	SW8260B	1	2.1	11	ND		ug/Kg	04/07/18	3:09	NP	430812
Dibromochloromethane	SW8260B	1	2.1	11	ND		ug/Kg	04/07/18	3:09	NP	430812
1,3-Dichloropropane	SW8260B	1	2.1	11	ND		ug/Kg	04/07/18	3:09	NP	430812

Torrent LABORATORY, INC.

SAMPLE RESULTS

Report prepared for: Peter Langtry
Cornerstone Earth Group

Date/Time Received: 04/04/18, 4:15 pm
Date Reported: 04/09/18

Client Sample ID:	EB-20 (4.5-5)	**Lab Sample ID:**	1804039-001B
Project Name/Location:	1433-1493 El Camino Real	**Sample Matrix:**	Soil
Project Number:	958-1-5		
Date/Time Sampled:	04/04/18 / 12:53		
SDG:			

Prep Method:	5035	**Prep Batch Date/Time:**	4/6/18	6:39:00PM
Prep Batch ID:	1104070	**Prep Analyst:**	NPAR	

Parameters:	Analysis Method	DF	MDL	PQL	Results	Q	Units	Analyzed	Time	By	Analytical Batch
1,2-Dibromoethane	SW8260B	1	2.1	11	ND		ug/Kg	04/07/18	3:09	NP	430812
Chlorobenzene	SW8260B	1	2.1	11	ND		ug/Kg	04/07/18	3:09	NP	430812
Ethyl Benzene	SW8260B	1	1.9	11	ND		ug/Kg	04/07/18	3:09	NP	430812
1,1,1,2-Tetrachloroethane	SW8260B	1	2.2	11	ND		ug/Kg	04/07/18	3:09	NP	430812
m,p-Xylene	SW8260B	1	3.6	11	ND		ug/Kg	04/07/18	3:09	NP	430812
o-Xylene	SW8260B	1	2.0	11	ND		ug/Kg	04/07/18	3:09	NP	430812
Styrene	SW8260B	1	1.9	11	ND		ug/Kg	04/07/18	3:09	NP	430812
Bromoform	SW8260B	1	1.9	11	ND		ug/Kg	04/07/18	3:09	NP	430812
Isopropyl Benzene	SW8260B	1	1.8	11	ND		ug/Kg	04/07/18	3:09	NP	430812
n-Propylbenzene	SW8260B	1	1.8	11	ND		ug/Kg	04/07/18	3:09	NP	430812
Bromobenzene	SW8260B	1	2.0	11	ND		ug/Kg	04/07/18	3:09	NP	430812
1,1,2,2-Tetrachloroethane	SW8260B	1	2.2	11	ND		ug/Kg	04/07/18	3:09	NP	430812
2-Chlorotoluene	SW8260B	1	2.0	11	ND		ug/Kg	04/07/18	3:09	NP	430812
1,3,5-Trimethylbenzene	SW8260B	1	1.8	11	ND		ug/Kg	04/07/18	3:09	NP	430812
1,2,3-Trichloropropane	SW8260B	1	2.2	11	ND		ug/Kg	04/07/18	3:09	NP	430812
4-Chlorotoluene	SW8260B	1	1.9	11	ND		ug/Kg	04/07/18	3:09	NP	430812
tert-Butylbenzene	SW8260B	1	1.9	11	ND		ug/Kg	04/07/18	3:09	NP	430812
1,2,4-Trimethylbenzene	SW8260B	1	1.6	11	ND		ug/Kg	04/07/18	3:09	NP	430812
sec-Butyl Benzene	SW8260B	1	1.8	11	ND		ug/Kg	04/07/18	3:09	NP	430812
p-Isopropyltoluene	SW8260B	1	1.7	11	ND		ug/Kg	04/07/18	3:09	NP	430812
1,3-Dichlorobenzene	SW8260B	1	1.9	11	ND		ug/Kg	04/07/18	3:09	NP	430812
1,4-Dichlorobenzene	SW8260B	1	2.0	11	ND		ug/Kg	04/07/18	3:09	NP	430812
n-Butylbenzene	SW8260B	1	1.7	11	ND		ug/Kg	04/07/18	3:09	NP	430812
1,2-Dichlorobenzene	SW8260B	1	2.0	11	ND		ug/Kg	04/07/18	3:09	NP	430812
1,2-Dibromo-3-Chloropropane	SW8260B	1	2.1	11	ND		ug/Kg	04/07/18	3:09	NP	430812
Hexachlorobutadiene	SW8260B	1	1.6	11	ND		ug/Kg	04/07/18	3:09	NP	430812
1,2,4-Trichlorobenzene	SW8260B	1	1.7	11	ND		ug/Kg	04/07/18	3:09	NP	430812
Naphthalene	SW8260B	1	1.9	11	ND		ug/Kg	04/07/18	3:09	NP	430812
1,2,3-Trichlorobenzene	SW8260B	1	1.9	11	ND		ug/Kg	04/07/18	3:09	NP	430812
2-Butanone	SW8260B	1	2.6	11	ND		ug/Kg	04/07/18	3:09	NP	430812
(S) Dibromofluoromethane	SW8260B		59.8 - 148		**104**		%	04/07/18	3:09	NP	430812
(S) Toluene-d8	SW8260B		55.2 - 133		**105**		%	04/07/18	3:09	NP	430812
(S) 4-Bromofluorobenzene	SW8260B		55.8 - 141		**103**		%	04/07/18	3:09	NP	430812

Torrent LABORATORY, INC.

SAMPLE RESULTS

Report prepared for: Peter Langtry
Cornerstone Earth Group

Date/Time Received: 04/04/18, 4:15 pm
Date Reported: 04/09/18

Client Sample ID:	EB-20 (4.5-5)	**Lab Sample ID:**	1804039-001B
Project Name/Location:	1433-1493 El Camino Real	**Sample Matrix:**	Soil
Project Number:	958-1-5		
Date/Time Sampled:	04/04/18 / 12:53		
SDG:			

Prep Method:	5035GRO	**Prep Batch Date/Time:**	4/6/18	6:39:00PM
Prep Batch ID:	1104071	**Prep Analyst:**	NPAR	

Parameters:	Analysis Method	DF	MDL	PQL	Results	Q	Units	Analyzed	Time	By	Analytical Batch
TPH(Gasoline)	8260TPH	1	49	110	ND		ug/Kg	04/07/18	3:09	NP	430812
(S) 4-Bromofluorobenzene	8260TPH		43.9 - 127		**70.7**		%	04/07/18	3:09	NP	430812

Torrent LABORATORY, INC.

SAMPLE RESULTS

Report prepared for: Peter Langtry
Cornerstone Earth Group

Date/Time Received: 04/04/18, 4:15 pm
Date Reported: 04/09/18

Client Sample ID:	EB-20 (9.5-10)	**Lab Sample ID:**	1804039-002A
Project Name/Location:	1433-1493 El Camino Real	**Sample Matrix:**	Soil
Project Number:	958-1-5		
Date/Time Sampled:	04/04/18 / 12:57		
SDG:			

Prep Method:	3546_TPH	**Prep Batch Date/Time:**	4/5/18 6:00:00PM
Prep Batch ID:	1104005	**Prep Analyst:**	SNARASIMHAN

Parameters:	Analysis Method	DF	MDL	PQL	Results	Q	Units	Analyzed	Time	By	Analytical Batch
TPH as Diesel	SW8015B	1	0.85	2.0	**2.31**	x	mg/Kg	04/06/18	13:54	mk	430765
			Acceptance Limits								
Pentacosane (S)	SW8015B		59 - 129		**90.9**		%	04/06/18	13:54	mk	430765

NOTE: x-not typical of Diesel ref. std: peaks within Diesel range quantified as diesel

Torrent LABORATORY, INC.

SAMPLE RESULTS

Report prepared for: Peter Langtry
Cornerstone Earth Group

Date/Time Received: 04/04/18, 4:15 pm
Date Reported: 04/09/18

Client Sample ID:	EB-20 (9.5-10)	**Lab Sample ID:**	1804039-002B
Project Name/Location:	1433-1493 El Camino Real	**Sample Matrix:**	Soil
Project Number:	958-1-5		
Date/Time Sampled:	04/04/18 / 12:57		
SDG:			

Prep Method:	5035	**Prep Batch Date/Time:**	4/6/18	6:39:00PM
Prep Batch ID:	1104070	**Prep Analyst:**	NPAR	

Parameters:	Analysis Method	DF	MDL	PQL	Results	Q	Units	Analyzed	Time	By	Analytical Batch
Dichlorodifluoromethane	SW8260B	1	1.4	11	ND		ug/Kg	04/07/18	3:41	NP	430812
Chloromethane	SW8260B	1	2.1	11	ND		ug/Kg	04/07/18	3:41	NP	430812
Vinyl Chloride	SW8260B	1	2.3	11	ND		ug/Kg	04/07/18	3:41	NP	430812
Bromomethane	SW8260B	1	3.0	11	ND		ug/Kg	04/07/18	3:41	NP	430812
Chloroethane	SW8260B	1	3.4	11	ND		ug/Kg	04/07/18	3:41	NP	430812
Trichlorofluoromethane	SW8260B	1	2.3	11	ND		ug/Kg	04/07/18	3:41	NP	430812
1,1-Dichloroethene	SW8260B	1	2.3	11	ND		ug/Kg	04/07/18	3:41	NP	430812
Freon 113	SW8260B	1	2.1	11	ND		ug/Kg	04/07/18	3:41	NP	430812
Methylene Chloride	SW8260B	1	8.0	11	ND		ug/Kg	04/07/18	3:41	NP	430812
trans-1,2-Dichloroethene	SW8260B	1	2.4	11	ND		ug/Kg	04/07/18	3:41	NP	430812
MTBE	SW8260B	1	2.7	11	ND		ug/Kg	04/07/18	3:41	NP	430812
tert-Butanol	SW8260B	1	13	57	**310**		ug/Kg	04/07/18	3:41	NP	430812
Diisopropyl ether (DIPE)	SW8260B	1	2.6	11	ND		ug/Kg	04/07/18	3:41	NP	430812
1,1-Dichloroethane	SW8260B	1	2.5	11	ND		ug/Kg	04/07/18	3:41	NP	430812
ETBE	SW8260B	1	2.6	11	ND		ug/Kg	04/07/18	3:41	NP	430812
cis-1,2-Dichloroethene	SW8260B	1	2.5	11	ND		ug/Kg	04/07/18	3:41	NP	430812
2,2-Dichloropropane	SW8260B	1	2.2	11	ND		ug/Kg	04/07/18	3:41	NP	430812
Bromochloromethane	SW8260B	1	2.6	11	ND		ug/Kg	04/07/18	3:41	NP	430812
Chloroform	SW8260B	1	2.7	11	ND		ug/Kg	04/07/18	3:41	NP	430812
Carbon Tetrachloride	SW8260B	1	2.3	11	ND		ug/Kg	04/07/18	3:41	NP	430812
1,1,1-Trichloroethane	SW8260B	1	2.4	11	ND		ug/Kg	04/07/18	3:41	NP	430812
1,1-Dichloropropene	SW8260B	1	2.2	11	ND		ug/Kg	04/07/18	3:41	NP	430812
Benzene	SW8260B	1	2.5	11	ND		ug/Kg	04/07/18	3:41	NP	430812
TAME	SW8260B	1	2.6	11	ND		ug/Kg	04/07/18	3:41	NP	430812
1,2-Dichloroethane	SW8260B	1	2.6	11	ND		ug/Kg	04/07/18	3:41	NP	430812
Trichloroethylene	SW8260B	1	2.0	11	ND		ug/Kg	04/07/18	3:41	NP	430812
Dibromomethane	SW8260B	1	2.1	11	ND		ug/Kg	04/07/18	3:41	NP	430812
1,2-Dichloropropane	SW8260B	1	2.1	11	ND		ug/Kg	04/07/18	3:41	NP	430812
Bromodichloromethane	SW8260B	1	2.2	11	ND		ug/Kg	04/07/18	3:41	NP	430812
cis-1,3-Dichloropropene	SW8260B	1	1.8	11	ND		ug/Kg	04/07/18	3:41	NP	430812
Toluene	SW8260B	1	2.1	11	ND		ug/Kg	04/07/18	3:41	NP	430812
Tetrachloroethylene	SW8260B	1	1.9	11	ND		ug/Kg	04/07/18	3:41	NP	430812
trans-1,3-Dichloropropene	SW8260B	1	1.9	11	ND		ug/Kg	04/07/18	3:41	NP	430812
1,1,2-Trichloroethane	SW8260B	1	2.1	11	ND		ug/Kg	04/07/18	3:41	NP	430812
Dibromochloromethane	SW8260B	1	2.1	11	ND		ug/Kg	04/07/18	3:41	NP	430812
1,3-Dichloropropane	SW8260B	1	2.1	11	ND		ug/Kg	04/07/18	3:41	NP	430812

Torrent LABORATORY, INC.

SAMPLE RESULTS

Report prepared for: Peter Langtry
Cornerstone Earth Group

Date/Time Received: 04/04/18, 4:15 pm
Date Reported: 04/09/18

Client Sample ID:	EB-20 (9.5-10)	**Lab Sample ID:**	1804039-002B
Project Name/Location:	1433-1493 El Camino Real	**Sample Matrix:**	Soil
Project Number:	958-1-5		
Date/Time Sampled:	04/04/18 / 12:57		
SDG:			

Prep Method:	5035	**Prep Batch Date/Time:**	4/6/18	6:39:00PM
Prep Batch ID:	1104070	**Prep Analyst:**	NPAR	

Parameters:	Analysis Method	DF	MDL	PQL	Results	Q	Units	Analyzed	Time	By	Analytical Batch
1,2-Dibromoethane	SW8260B	1	2.0	11	ND		ug/Kg	04/07/18	3:41	NP	430812
Chlorobenzene	SW8260B	1	2.0	11	ND		ug/Kg	04/07/18	3:41	NP	430812
Ethyl Benzene	SW8260B	1	1.9	11	ND		ug/Kg	04/07/18	3:41	NP	430812
1,1,1,2-Tetrachloroethane	SW8260B	1	2.2	11	ND		ug/Kg	04/07/18	3:41	NP	430812
m,p-Xylene	SW8260B	1	3.6	11	ND		ug/Kg	04/07/18	3:41	NP	430812
o-Xylene	SW8260B	1	2.0	11	ND		ug/Kg	04/07/18	3:41	NP	430812
Styrene	SW8260B	1	1.9	11	ND		ug/Kg	04/07/18	3:41	NP	430812
Bromoform	SW8260B	1	1.9	11	ND		ug/Kg	04/07/18	3:41	NP	430812
Isopropyl Benzene	SW8260B	1	1.8	11	ND		ug/Kg	04/07/18	3:41	NP	430812
n-Propylbenzene	SW8260B	1	1.8	11	ND		ug/Kg	04/07/18	3:41	NP	430812
Bromobenzene	SW8260B	1	2.0	11	ND		ug/Kg	04/07/18	3:41	NP	430812
1,1,2,2-Tetrachloroethane	SW8260B	1	2.2	11	ND		ug/Kg	04/07/18	3:41	NP	430812
2-Chlorotoluene	SW8260B	1	2.0	11	ND		ug/Kg	04/07/18	3:41	NP	430812
1,3,5-Trimethylbenzene	SW8260B	1	1.8	11	ND		ug/Kg	04/07/18	3:41	NP	430812
1,2,3-Trichloropropane	SW8260B	1	2.2	11	ND		ug/Kg	04/07/18	3:41	NP	430812
4-Chlorotoluene	SW8260B	1	1.9	11	ND		ug/Kg	04/07/18	3:41	NP	430812
tert-Butylbenzene	SW8260B	1	1.8	11	ND		ug/Kg	04/07/18	3:41	NP	430812
1,2,4-Trimethylbenzene	SW8260B	1	1.5	11	ND		ug/Kg	04/07/18	3:41	NP	430812
sec-Butyl Benzene	SW8260B	1	1.8	11	ND		ug/Kg	04/07/18	3:41	NP	430812
p-Isopropyltoluene	SW8260B	1	1.7	11	ND		ug/Kg	04/07/18	3:41	NP	430812
1,3-Dichlorobenzene	SW8260B	1	1.9	11	ND		ug/Kg	04/07/18	3:41	NP	430812
1,4-Dichlorobenzene	SW8260B	1	1.9	11	ND		ug/Kg	04/07/18	3:41	NP	430812
n-Butylbenzene	SW8260B	1	1.6	11	ND		ug/Kg	04/07/18	3:41	NP	430812
1,2-Dichlorobenzene	SW8260B	1	2.0	11	ND		ug/Kg	04/07/18	3:41	NP	430812
1,2-Dibromo-3-Chloropropane	SW8260B	1	2.1	11	ND		ug/Kg	04/07/18	3:41	NP	430812
Hexachlorobutadiene	SW8260B	1	1.5	11	ND		ug/Kg	04/07/18	3:41	NP	430812
1,2,4-Trichlorobenzene	SW8260B	1	1.7	11	ND		ug/Kg	04/07/18	3:41	NP	430812
Naphthalene	SW8260B	1	1.9	11	ND		ug/Kg	04/07/18	3:41	NP	430812
1,2,3-Trichlorobenzene	SW8260B	1	1.9	11	ND		ug/Kg	04/07/18	3:41	NP	430812
2-Butanone	SW8260B	1	2.6	11	ND		ug/Kg	04/07/18	3:41	NP	430812
(S) Dibromofluoromethane	SW8260B		59.8 - 148		**109**		%	04/07/18	3:41	NP	430812
(S) Toluene-d8	SW8260B		55.2 - 133		**110**		%	04/07/18	3:41	NP	430812
(S) 4-Bromofluorobenzene	SW8260B		55.8 - 141		**103**		%	04/07/18	3:41	NP	430812

Torrent LABORATORY, INC.

SAMPLE RESULTS

Report prepared for: Peter Langtry
Cornerstone Earth Group

Date/Time Received: 04/04/18, 4:15 pm
Date Reported: 04/09/18

Client Sample ID:	EB-20 (9.5-10)	**Lab Sample ID:**	1804039-002B
Project Name/Location:	1433-1493 El Camino Real	**Sample Matrix:**	Soil
Project Number:	958-1-5		
Date/Time Sampled:	04/04/18 / 12:57		
SDG:			

Prep Method:	5035GRO	**Prep Batch Date/Time:**	4/6/18	6:39:00PM
Prep Batch ID:	1104071	**Prep Analyst:**	NPAR	

Parameters:	Analysis Method	DF	MDL	PQL	Results	Q	Units	Analyzed	Time	By	Analytical Batch
TPH(Gasoline)	8260TPH	1	49	110	ND		ug/Kg	04/07/18	3:41	NP	430812
(S) 4-Bromofluorobenzene	8260TPH		43.9 - 127		**62.4**		%	04/07/18	3:41	NP	430812

Torrent LABORATORY, INC.

SAMPLE RESULTS

Report prepared for: Peter Langtry
Cornerstone Earth Group

Date/Time Received: 04/04/18, 4:15 pm
Date Reported: 04/09/18

Client Sample ID:	EB-20 (16-16.5)	**Lab Sample ID:**	1804039-003A
Project Name/Location:	1433-1493 El Camino Real	**Sample Matrix:**	Soil
Project Number:	958-1-5		
Date/Time Sampled:	04/04/18 / 13:00		
SDG:			

Prep Method:	3546_TPH	**Prep Batch Date/Time:**	4/5/18 6:00:00PM
Prep Batch ID:	1104005	**Prep Analyst:**	SNARASIMHAN

Parameters:	Analysis Method	DF	MDL	PQL	Results	Q	Units	Analyzed	Time	By	Analytical Batch
TPH as Diesel	SW8015B	1	0.85	2.0	**9.81**	x	mg/Kg	04/06/18	14:17	mk	430765
			Acceptance Limits								
Pentacosane (S)	SW8015B		59 - 129		**118**		%	04/06/18	14:17	mk	430765

NOTE: x- Chromatographic pattern does not resemble typical diesel reference standard; unknown organics within diesel range lighter than diesel quantified as diesel.

Torrent LABORATORY, INC.

SAMPLE RESULTS

Report prepared for: Peter Langtry
Cornerstone Earth Group

Date/Time Received: 04/04/18, 4:15 pm
Date Reported: 04/09/18

Client Sample ID:	EB-20 (16-16.5)	**Lab Sample ID:**	1804039-003B
Project Name/Location:	1433-1493 El Camino Real	**Sample Matrix:**	Soil
Project Number:	958-1-5		
Date/Time Sampled:	04/04/18 / 13:00		
SDG:			

Prep Method:	5035	**Prep Batch Date/Time:**	4/9/18	9:22:00AM
Prep Batch ID:	1104109	**Prep Analyst:**	NPAR	

Parameters:	Analysis Method	DF	MDL	PQL	Results	Q	Units	Analyzed	Time	By	Analytical Batch
Dichlorodifluoromethane	SW8260B	1000	1300	11000	ND		ug/Kg	04/09/18	13:14	NP	430855
Chloromethane	SW8260B	1000	1900	11000	ND		ug/Kg	04/09/18	13:14	NP	430855
Vinyl Chloride	SW8260B	1000	2200	11000	ND		ug/Kg	04/09/18	13:14	NP	430855
Bromomethane	SW8260B	1000	2900	11000	ND		ug/Kg	04/09/18	13:14	NP	430855
Chloroethane	SW8260B	1000	3200	11000	ND		ug/Kg	04/09/18	13:14	NP	430855
Trichlorofluoromethane	SW8260B	1000	2200	11000	ND		ug/Kg	04/09/18	13:14	NP	430855
1,1-Dichloroethene	SW8260B	1000	2200	11000	ND		ug/Kg	04/09/18	13:14	NP	430855
Freon 113	SW8260B	1000	2000	11000	ND		ug/Kg	04/09/18	13:14	NP	430855
Methylene Chloride	SW8260B	1000	7600	11000	ND		ug/Kg	04/09/18	13:14	NP	430855
trans-1,2-Dichloroethene	SW8260B	1000	2200	11000	ND		ug/Kg	04/09/18	13:14	NP	430855
MTBE	SW8260B	1000	2500	11000	ND		ug/Kg	04/09/18	13:14	NP	430855
tert-Butanol	SW8260B	1000	12000	53000	ND		ug/Kg	04/09/18	13:14	NP	430855
Diisopropyl ether (DIPE)	SW8260B	1000	2400	11000	ND		ug/Kg	04/09/18	13:14	NP	430855
1,1-Dichloroethane	SW8260B	1000	2300	11000	ND		ug/Kg	04/09/18	13:14	NP	430855
ETBE	SW8260B	1000	2400	11000	ND		ug/Kg	04/09/18	13:14	NP	430855
cis-1,2-Dichloroethene	SW8260B	1000	2400	11000	ND		ug/Kg	04/09/18	13:14	NP	430855
2,2-Dichloropropane	SW8260B	1000	2000	11000	ND		ug/Kg	04/09/18	13:14	NP	430855
Bromochloromethane	SW8260B	1000	2500	11000	ND		ug/Kg	04/09/18	13:14	NP	430855
Chloroform	SW8260B	1000	2500	11000	ND		ug/Kg	04/09/18	13:14	NP	430855
Carbon Tetrachloride	SW8260B	1000	2200	11000	ND		ug/Kg	04/09/18	13:14	NP	430855
1,1,1-Trichloroethane	SW8260B	1000	2200	11000	ND		ug/Kg	04/09/18	13:14	NP	430855
1,1-Dichloropropene	SW8260B	1000	2100	11000	ND		ug/Kg	04/09/18	13:14	NP	430855
Benzene	SW8260B	1000	2400	11000	ND		ug/Kg	04/09/18	13:14	NP	430855
TAME	SW8260B	1000	2400	11000	ND		ug/Kg	04/09/18	13:14	NP	430855
1,2-Dichloroethane	SW8260B	1000	2500	11000	ND		ug/Kg	04/09/18	13:14	NP	430855
Trichloroethylene	SW8260B	1000	1900	11000	ND		ug/Kg	04/09/18	13:14	NP	430855
Dibromomethane	SW8260B	1000	2000	11000	ND		ug/Kg	04/09/18	13:14	NP	430855
1,2-Dichloropropane	SW8260B	1000	2000	11000	ND		ug/Kg	04/09/18	13:14	NP	430855
Bromodichloromethane	SW8260B	1000	2100	11000	ND		ug/Kg	04/09/18	13:14	NP	430855
cis-1,3-Dichloropropene	SW8260B	1000	1700	11000	ND		ug/Kg	04/09/18	13:14	NP	430855
Toluene	SW8260B	1000	1900	11000	ND		ug/Kg	04/09/18	13:14	NP	430855
Tetrachloroethylene	SW8260B	1000	1800	11000	ND		ug/Kg	04/09/18	13:14	NP	430855
trans-1,3-Dichloropropene	SW8260B	1000	1700	11000	ND		ug/Kg	04/09/18	13:14	NP	430855
1,1,2-Trichloroethane	SW8260B	1000	2000	11000	ND		ug/Kg	04/09/18	13:14	NP	430855
Dibromochloromethane	SW8260B	1000	2000	11000	ND		ug/Kg	04/09/18	13:14	NP	430855
1,3-Dichloropropane	SW8260B	1000	1900	11000	ND		ug/Kg	04/09/18	13:14	NP	430855

Torrent LABORATORY, INC.

SAMPLE RESULTS

Report prepared for: Peter Langtry
Cornerstone Earth Group

Date/Time Received: 04/04/18, 4:15 pm
Date Reported: 04/09/18

Client Sample ID:	EB-20 (16-16.5)	**Lab Sample ID:**	1804039-003B
Project Name/Location:	1433-1493 El Camino Real	**Sample Matrix:**	Soil
Project Number:	958-1-5		
Date/Time Sampled:	04/04/18 / 13:00		
SDG:			

Prep Method:	5035	**Prep Batch Date/Time:**	4/9/18	9:22:00AM
Prep Batch ID:	1104109	**Prep Analyst:**	NPAR	

Parameters:	Analysis Method	DF	MDL	PQL	Results	Q	Units	Analyzed	Time	By	Analytical Batch
1,2-Dibromoethane	SW8260B	1000	1900	11000	ND		ug/Kg	04/09/18	13:14	NP	430855
Chlorobenzene	SW8260B	1000	1900	11000	ND		ug/Kg	04/09/18	13:14	NP	430855
Ethyl Benzene	SW8260B	1000	1800	11000	ND		ug/Kg	04/09/18	13:14	NP	430855
1,1,1,2-Tetrachloroethane	SW8260B	1000	2100	11000	ND		ug/Kg	04/09/18	13:14	NP	430855
m,p-Xylene	SW8260B	1000	3400	11000	ND		ug/Kg	04/09/18	13:14	NP	430855
o-Xylene	SW8260B	1000	1800	11000	ND		ug/Kg	04/09/18	13:14	NP	430855
Styrene	SW8260B	1000	1700	11000	ND		ug/Kg	04/09/18	13:14	NP	430855
Bromoform	SW8260B	1000	1800	11000	ND		ug/Kg	04/09/18	13:14	NP	430855
Isopropyl Benzene	SW8260B	1000	1700	11000	ND		ug/Kg	04/09/18	13:14	NP	430855
n-Propylbenzene	SW8260B	1000	1700	11000	ND		ug/Kg	04/09/18	13:14	NP	430855
Bromobenzene	SW8260B	1000	1900	11000	ND		ug/Kg	04/09/18	13:14	NP	430855
1,1,2,2-Tetrachloroethane	SW8260B	1000	2000	11000	ND		ug/Kg	04/09/18	13:14	NP	430855
2-Chlorotoluene	SW8260B	1000	1900	11000	ND		ug/Kg	04/09/18	13:14	NP	430855
1,3,5-Trimethylbenzene	SW8260B	1000	1700	11000	**15200**		ug/Kg	04/09/18	13:14	NP	430855
1,2,3-Trichloropropane	SW8260B	1000	2000	11000	ND		ug/Kg	04/09/18	13:14	NP	430855
4-Chlorotoluene	SW8260B	1000	1700	11000	ND		ug/Kg	04/09/18	13:14	NP	430855
tert-Butylbenzene	SW8260B	1000	1700	11000	ND		ug/Kg	04/09/18	13:14	NP	430855
1,2,4-Trimethylbenzene	SW8260B	1000	1400	11000	**49300**		ug/Kg	04/09/18	13:14	NP	430855
sec-Butyl Benzene	SW8260B	1000	1700	11000	ND		ug/Kg	04/09/18	13:14	NP	430855
p-Isopropyltoluene	SW8260B	1000	1600	11000	ND		ug/Kg	04/09/18	13:14	NP	430855
1,3-Dichlorobenzene	SW8260B	1000	1800	11000	ND		ug/Kg	04/09/18	13:14	NP	430855
1,4-Dichlorobenzene	SW8260B	1000	1800	11000	ND		ug/Kg	04/09/18	13:14	NP	430855
n-Butylbenzene	SW8260B	1000	1500	11000	ND		ug/Kg	04/09/18	13:14	NP	430855
1,2-Dichlorobenzene	SW8260B	1000	1900	11000	ND		ug/Kg	04/09/18	13:14	NP	430855
1,2-Dibromo-3-Chloropropane	SW8260B	1000	2000	11000	ND		ug/Kg	04/09/18	13:14	NP	430855
Hexachlorobutadiene	SW8260B	1000	1500	11000	ND		ug/Kg	04/09/18	13:14	NP	430855
1,2,4-Trichlorobenzene	SW8260B	1000	1600	11000	ND		ug/Kg	04/09/18	13:14	NP	430855
Naphthalene	SW8260B	1000	1800	11000	ND		ug/Kg	04/09/18	13:14	NP	430855
1,2,3-Trichlorobenzene	SW8260B	1000	1800	11000	ND		ug/Kg	04/09/18	13:14	NP	430855
2-Butanone	SW8260B	1000	2400	11000	**27500**		ug/Kg	04/09/18	13:14	NP	430855
(S) Dibromofluoromethane	SW8260B		59.8 - 148		**108**		%	04/09/18	13:14	NP	430855
(S) Toluene-d8	SW8260B		55.2 - 133		**107**		%	04/09/18	13:14	NP	430855
(S) 4-Bromofluorobenzene	SW8260B		55.8 - 141		**110**		%	04/09/18	13:14	NP	430855

Torrent LABORATORY, INC.

SAMPLE RESULTS

Report prepared for: Peter Langtry
Cornerstone Earth Group

Date/Time Received: 04/04/18, 4:15 pm
Date Reported: 04/09/18

Client Sample ID:	EB-20 (16-16.5)	**Lab Sample ID:**	1804039-003B
Project Name/Location:	1433-1493 El Camino Real	**Sample Matrix:**	Soil
Project Number:	958-1-5		
Date/Time Sampled:	04/04/18 / 13:00		
SDG:			

Prep Method:	5035GRO	**Prep Batch Date/Time:**	4/9/18	9:22:00AM
Prep Batch ID:	1104111	**Prep Analyst:**	NPAR	

Parameters:	Analysis Method	DF	MDL	PQL	Results	Q	Units	Analyzed	Time	By	Analytical Batch
TPH(Gasoline)	8260TPH	1000	46000	110000	**1380000**	x	ug/Kg	04/09/18	13:14	NP	430855
(S) 4-Bromofluorobenzene	8260TPH		43.9 - 127		**107**		%	04/09/18	13:14	NP	430855

NOTE: x- Sample chromatogram does not resemble gasoline standard pattern. Results elevated due to heavy end hydrocarbons (possibly aged gasoline).

Torrent LABORATORY, INC.

SAMPLE RESULTS

Report prepared for: Peter Langtry
Cornerstone Earth Group

Date/Time Received: 04/04/18, 4:15 pm
Date Reported: 04/09/18

Client Sample ID:	EB-20 (19.5-20)	**Lab Sample ID:**	1804039-004B
Project Name/Location:	1433-1493 El Camino Real	**Sample Matrix:**	Soil
Project Number:	958-1-5		
Date/Time Sampled:	04/04/18 / 13:05		
SDG:			

Prep Method:	5035	**Prep Batch Date/Time:**	4/13/18	10:24:00AM
Prep Batch ID:	1104252	**Prep Analyst:**	NPAR	

Parameters:	Analysis Method	DF	MDL	PQL	Results	Q	Units	Analyzed	Time	By	Analytical Batch
Dichlorodifluoromethane	SW8260B	100	120	1000	ND		ug/Kg	04/13/18	16:04	NP	430986
Chloromethane	SW8260B	100	180	1000	ND		ug/Kg	04/13/18	16:04	NP	430986
Vinyl Chloride	SW8260B	100	200	1000	ND		ug/Kg	04/13/18	16:04	NP	430986
Bromomethane	SW8260B	100	270	1000	ND		ug/Kg	04/13/18	16:04	NP	430986
Chloroethane	SW8260B	100	300	1000	ND		ug/Kg	04/13/18	16:04	NP	430986
Trichlorofluoromethane	SW8260B	100	210	1000	ND		ug/Kg	04/13/18	16:04	NP	430986
1,1-Dichloroethene	SW8260B	100	200	1000	ND		ug/Kg	04/13/18	16:04	NP	430986
Freon 113	SW8260B	100	190	1000	ND		ug/Kg	04/13/18	16:04	NP	430986
Methylene Chloride	SW8260B	100	710	1000	ND		ug/Kg	04/13/18	16:04	NP	430986
trans-1,2-Dichloroethene	SW8260B	100	210	1000	ND		ug/Kg	04/13/18	16:04	NP	430986
MTBE	SW8260B	100	230	1000	ND		ug/Kg	04/13/18	16:04	NP	430986
tert-Butanol	SW8260B	100	1200	5000	ND		ug/Kg	04/13/18	16:04	NP	430986
Diisopropyl ether (DIPE)	SW8260B	100	230	1000	ND		ug/Kg	04/13/18	16:04	NP	430986
1,1-Dichloroethane	SW8260B	100	220	1000	ND		ug/Kg	04/13/18	16:04	NP	430986
ETBE	SW8260B	100	230	1000	ND		ug/Kg	04/13/18	16:04	NP	430986
cis-1,2-Dichloroethene	SW8260B	100	220	1000	ND		ug/Kg	04/13/18	16:04	NP	430986
2,2-Dichloropropane	SW8260B	100	190	1000	ND		ug/Kg	04/13/18	16:04	NP	430986
Bromochloromethane	SW8260B	100	230	1000	ND		ug/Kg	04/13/18	16:04	NP	430986
Chloroform	SW8260B	100	240	1000	ND		ug/Kg	04/13/18	16:04	NP	430986
Carbon Tetrachloride	SW8260B	100	210	1000	ND		ug/Kg	04/13/18	16:04	NP	430986
1,1,1-Trichloroethane	SW8260B	100	210	1000	ND		ug/Kg	04/13/18	16:04	NP	430986
1,1-Dichloropropene	SW8260B	100	200	1000	ND		ug/Kg	04/13/18	16:04	NP	430986
Benzene	SW8260B	100	220	1000	ND		ug/Kg	04/13/18	16:04	NP	430986
TAME	SW8260B	100	230	1000	ND		ug/Kg	04/13/18	16:04	NP	430986
1,2-Dichloroethane	SW8260B	100	230	1000	ND		ug/Kg	04/13/18	16:04	NP	430986
Trichloroethylene	SW8260B	100	180	1000	ND		ug/Kg	04/13/18	16:04	NP	430986
Dibromomethane	SW8260B	100	180	1000	ND		ug/Kg	04/13/18	16:04	NP	430986
1,2-Dichloropropane	SW8260B	100	190	1000	ND		ug/Kg	04/13/18	16:04	NP	430986
Bromodichloromethane	SW8260B	100	200	1000	ND		ug/Kg	04/13/18	16:04	NP	430986
cis-1,3-Dichloropropene	SW8260B	100	160	1000	ND		ug/Kg	04/13/18	16:04	NP	430986
Toluene	SW8260B	100	180	1000	ND		ug/Kg	04/13/18	16:04	NP	430986
Tetrachloroethylene	SW8260B	100	170	1000	ND		ug/Kg	04/13/18	16:04	NP	430986
trans-1,3-Dichloropropene	SW8260B	100	160	1000	ND		ug/Kg	04/13/18	16:04	NP	430986
1,1,2-Trichloroethane	SW8260B	100	180	1000	ND		ug/Kg	04/13/18	16:04	NP	430986
Dibromochloromethane	SW8260B	100	190	1000	ND		ug/Kg	04/13/18	16:04	NP	430986
1,3-Dichloropropane	SW8260B	100	180	1000	ND		ug/Kg	04/13/18	16:04	NP	430986

Torrent LABORATORY, INC.

SAMPLE RESULTS

Report prepared for: Peter Langtry
Cornerstone Earth Group

Date/Time Received: 04/04/18, 4:15 pm
Date Reported: 04/09/18

Client Sample ID:	EB-20 (19.5-20)	**Lab Sample ID:**	1804039-004B
Project Name/Location:	1433-1493 El Camino Real	**Sample Matrix:**	Soil
Project Number:	958-1-5		
Date/Time Sampled:	04/04/18 / 13:05		
SDG:			

Prep Method:	5035	**Prep Batch Date/Time:**	4/13/18	10:24:00AM
Prep Batch ID:	1104252	**Prep Analyst:**	NPAR	

Parameters:	Analysis Method	DF	MDL	PQL	Results	Q	Units	Analyzed	Time	By	Analytical Batch
1,2-Dibromoethane	SW8260B	100	180	1000	ND		ug/Kg	04/13/18	16:04	NP	430986
Chlorobenzene	SW8260B	100	180	1000	ND		ug/Kg	04/13/18	16:04	NP	430986
Ethyl Benzene	SW8260B	100	170	1000	ND		ug/Kg	04/13/18	16:04	NP	430986
1,1,1,2-Tetrachloroethane	SW8260B	100	190	1000	ND		ug/Kg	04/13/18	16:04	NP	430986
m,p-Xylene	SW8260B	100	320	1000	ND		ug/Kg	04/13/18	16:04	NP	430986
o-Xylene	SW8260B	100	170	1000	ND		ug/Kg	04/13/18	16:04	NP	430986
Styrene	SW8260B	100	160	1000	ND		ug/Kg	04/13/18	16:04	NP	430986
Bromoform	SW8260B	100	170	1000	ND		ug/Kg	04/13/18	16:04	NP	430986
Isopropyl Benzene	SW8260B	100	160	1000	ND		ug/Kg	04/13/18	16:04	NP	430986
n-Propylbenzene	SW8260B	100	160	1000	ND		ug/Kg	04/13/18	16:04	NP	430986
Bromobenzene	SW8260B	100	180	1000	ND		ug/Kg	04/13/18	16:04	NP	430986
1,1,2,2-Tetrachloroethane	SW8260B	100	190	1000	ND		ug/Kg	04/13/18	16:04	NP	430986
2-Chlorotoluene	SW8260B	100	180	1000	ND		ug/Kg	04/13/18	16:04	NP	430986
1,3,5-Trimethylbenzene	SW8260B	100	160	1000	ND		ug/Kg	04/13/18	16:04	NP	430986
1,2,3-Trichloropropane	SW8260B	100	190	1000	ND		ug/Kg	04/13/18	16:04	NP	430986
4-Chlorotoluene	SW8260B	100	160	1000	ND		ug/Kg	04/13/18	16:04	NP	430986
tert-Butylbenzene	SW8260B	100	160	1000	ND		ug/Kg	04/13/18	16:04	NP	430986
1,2,4-Trimethylbenzene	SW8260B	100	140	1000	ND		ug/Kg	04/13/18	16:04	NP	430986
sec-Butyl Benzene	SW8260B	100	160	1000	ND		ug/Kg	04/13/18	16:04	NP	430986
p-Isopropyltoluene	SW8260B	100	150	1000	ND		ug/Kg	04/13/18	16:04	NP	430986
1,3-Dichlorobenzene	SW8260B	100	170	1000	ND		ug/Kg	04/13/18	16:04	NP	430986
1,4-Dichlorobenzene	SW8260B	100	170	1000	ND		ug/Kg	04/13/18	16:04	NP	430986
n-Butylbenzene	SW8260B	100	150	1000	ND		ug/Kg	04/13/18	16:04	NP	430986
1,2-Dichlorobenzene	SW8260B	100	180	1000	ND		ug/Kg	04/13/18	16:04	NP	430986
1,2-Dibromo-3-Chloropropane	SW8260B	100	180	1000	ND		ug/Kg	04/13/18	16:04	NP	430986
Hexachlorobutadiene	SW8260B	100	140	1000	ND		ug/Kg	04/13/18	16:04	NP	430986
1,2,4-Trichlorobenzene	SW8260B	100	150	1000	ND		ug/Kg	04/13/18	16:04	NP	430986
Naphthalene	SW8260B	100	170	1000	ND		ug/Kg	04/13/18	16:04	NP	430986
1,2,3-Trichlorobenzene	SW8260B	100	170	1000	ND		ug/Kg	04/13/18	16:04	NP	430986
2-Butanone	SW8260B	100	230	1000	ND		ug/Kg	04/13/18	16:04	NP	430986
(S) Dibromofluoromethane	SW8260B		59.8 - 148		**100**		%	04/13/18	16:04	NP	430986
(S) Toluene-d8	SW8260B		55.2 - 133		**108**		%	04/13/18	16:04	NP	430986
(S) 4-Bromofluorobenzene	SW8260B		55.8 - 141		**108**		%	04/13/18	16:04	NP	430986

Torrent LABORATORY, INC.

SAMPLE RESULTS

Report prepared for: Peter Langtry
Cornerstone Earth Group

Date/Time Received: 04/04/18, 4:15 pm
Date Reported: 04/09/18

Client Sample ID:	EB-20 (19.5-20)	**Lab Sample ID:**	1804039-004B
Project Name/Location:	1433-1493 El Camino Real	**Sample Matrix:**	Soil
Project Number:	958-1-5		
Date/Time Sampled:	04/04/18 / 13:05		
SDG:			

Prep Method:	5035GRO	**Prep Batch Date/Time:**	4/13/18	10:24:00AM
Prep Batch ID:	1104256	**Prep Analyst:**	NPAR	

Parameters:	Analysis Method	DF	MDL	PQL	Results	Q	Units	Analyzed	Time	By	Analytical Batch
The results shown below are reported using their MDL.											
TPH(Gasoline)	8260TPH	100	4300	10000	**5590**	J	ug/Kg	04/13/18	16:04	NP	430986
(S) 4-Bromofluorobenzene	8260TPH		43.9 - 127		**104**		%	04/13/18	16:04	NP	430986

NOTE: The reporting limits were raised due to the high concentration of target compounds.

Torrent LABORATORY, INC.

SAMPLE RESULTS

Report prepared for: Peter Langtry
Cornerstone Earth Group

Date/Time Received: 04/04/18, 4:15 pm
Date Reported: 04/09/18

Client Sample ID:	EB-18 (4.5-5)	**Lab Sample ID:**	1804039-005A
Project Name/Location:	1433-1493 El Camino Real	**Sample Matrix:**	Soil
Project Number:	958-1-5		
Date/Time Sampled:	04/04/18 / 13:27		
SDG:			

Prep Method:	3546_TPH	**Prep Batch Date/Time:**	4/5/18 6:00:00PM
Prep Batch ID:	1104005	**Prep Analyst:**	SNARASIMHAN

Parameters:	Analysis Method	DF	MDL	PQL	Results	Q	Units	Analyzed	Time	By	Analytical Batch
TPH as Diesel	SW8015B	1	0.85	2.0	**2.00**	x	mg/Kg	04/06/18	14:41	mk	430765
			Acceptance Limits								
Pentacosane (S)	SW8015B		59 - 129		**91.6**		%	04/06/18	14:41	mk	430765

NOTE: x-Diesel value the result of overlap of Oil range into Diesel range

Torrent LABORATORY, INC.

SAMPLE RESULTS

Report prepared for: Peter Langtry
Cornerstone Earth Group

Date/Time Received: 04/04/18, 4:15 pm
Date Reported: 04/09/18

Client Sample ID:	EB-18 (4.5-5)	**Lab Sample ID:**	1804039-005B
Project Name/Location:	1433-1493 El Camino Real	**Sample Matrix:**	Soil
Project Number:	958-1-5		
Date/Time Sampled:	04/04/18 / 13:27		
SDG:			

Prep Method:	5035	**Prep Batch Date/Time:**	4/6/18	6:39:00PM
Prep Batch ID:	1104070	**Prep Analyst:**	NPAR	

Parameters:	Analysis Method	DF	MDL	PQL	Results	Q	Units	Analyzed	Time	By	Analytical Batch
Dichlorodifluoromethane	SW8260B	1	1.1	9.2	ND		ug/Kg	04/07/18	4:13	NP	430812
Chloromethane	SW8260B	1	1.7	9.2	ND		ug/Kg	04/07/18	4:13	NP	430812
Vinyl Chloride	SW8260B	1	1.9	9.2	ND		ug/Kg	04/07/18	4:13	NP	430812
Bromomethane	SW8260B	1	2.5	9.2	ND		ug/Kg	04/07/18	4:13	NP	430812
Chloroethane	SW8260B	1	2.8	9.2	ND		ug/Kg	04/07/18	4:13	NP	430812
Trichlorofluoromethane	SW8260B	1	1.9	9.2	ND		ug/Kg	04/07/18	4:13	NP	430812
1,1-Dichloroethene	SW8260B	1	1.9	9.2	ND		ug/Kg	04/07/18	4:13	NP	430812
Freon 113	SW8260B	1	1.7	9.2	ND		ug/Kg	04/07/18	4:13	NP	430812
Methylene Chloride	SW8260B	1	6.5	9.2	ND		ug/Kg	04/07/18	4:13	NP	430812
trans-1,2-Dichloroethene	SW8260B	1	1.9	9.2	ND		ug/Kg	04/07/18	4:13	NP	430812
MTBE	SW8260B	1	2.2	9.2	ND		ug/Kg	04/07/18	4:13	NP	430812
tert-Butanol	SW8260B	1	11	46	**57.3**		ug/Kg	04/07/18	4:13	NP	430812
Diisopropyl ether (DIPE)	SW8260B	1	2.1	9.2	ND		ug/Kg	04/07/18	4:13	NP	430812
1,1-Dichloroethane	SW8260B	1	2.0	9.2	ND		ug/Kg	04/07/18	4:13	NP	430812
ETBE	SW8260B	1	2.1	9.2	ND		ug/Kg	04/07/18	4:13	NP	430812
cis-1,2-Dichloroethene	SW8260B	1	2.1	9.2	ND		ug/Kg	04/07/18	4:13	NP	430812
2,2-Dichloropropane	SW8260B	1	1.8	9.2	ND		ug/Kg	04/07/18	4:13	NP	430812
Bromochloromethane	SW8260B	1	2.2	9.2	ND		ug/Kg	04/07/18	4:13	NP	430812
Chloroform	SW8260B	1	2.2	9.2	ND		ug/Kg	04/07/18	4:13	NP	430812
Carbon Tetrachloride	SW8260B	1	1.9	9.2	ND		ug/Kg	04/07/18	4:13	NP	430812
1,1,1-Trichloroethane	SW8260B	1	1.9	9.2	ND		ug/Kg	04/07/18	4:13	NP	430812
1,1-Dichloropropene	SW8260B	1	1.8	9.2	ND		ug/Kg	04/07/18	4:13	NP	430812
Benzene	SW8260B	1	2.1	9.2	ND		ug/Kg	04/07/18	4:13	NP	430812
TAME	SW8260B	1	2.1	9.2	ND		ug/Kg	04/07/18	4:13	NP	430812
1,2-Dichloroethane	SW8260B	1	2.1	9.2	ND		ug/Kg	04/07/18	4:13	NP	430812
Trichloroethylene	SW8260B	1	1.7	9.2	ND		ug/Kg	04/07/18	4:13	NP	430812
Dibromomethane	SW8260B	1	1.7	9.2	ND		ug/Kg	04/07/18	4:13	NP	430812
1,2-Dichloropropane	SW8260B	1	1.7	9.2	ND		ug/Kg	04/07/18	4:13	NP	430812
Bromodichloromethane	SW8260B	1	1.8	9.2	ND		ug/Kg	04/07/18	4:13	NP	430812
cis-1,3-Dichloropropene	SW8260B	1	1.5	9.2	ND		ug/Kg	04/07/18	4:13	NP	430812
Toluene	SW8260B	1	1.7	9.2	ND		ug/Kg	04/07/18	4:13	NP	430812
Tetrachloroethylene	SW8260B	1	1.5	9.2	ND		ug/Kg	04/07/18	4:13	NP	430812
trans-1,3-Dichloropropene	SW8260B	1	1.5	9.2	ND		ug/Kg	04/07/18	4:13	NP	430812
1,1,2-Trichloroethane	SW8260B	1	1.7	9.2	ND		ug/Kg	04/07/18	4:13	NP	430812
Dibromochloromethane	SW8260B	1	1.7	9.2	ND		ug/Kg	04/07/18	4:13	NP	430812
1,3-Dichloropropane	SW8260B	1	1.7	9.2	ND		ug/Kg	04/07/18	4:13	NP	430812

Torrent LABORATORY, INC.

SAMPLE RESULTS

Report prepared for: Peter Langtry
Cornerstone Earth Group

Date/Time Received: 04/04/18, 4:15 pm
Date Reported: 04/09/18

Client Sample ID:	EB-18 (4.5-5)	**Lab Sample ID:**	1804039-005B
Project Name/Location:	1433-1493 El Camino Real	**Sample Matrix:**	Soil
Project Number:	958-1-5		
Date/Time Sampled:	04/04/18 / 13:27		
SDG:			

Prep Method:	5035	**Prep Batch Date/Time:**	4/6/18	6:39:00PM
Prep Batch ID:	1104070	**Prep Analyst:**	NPAR	

Parameters:	Analysis Method	DF	MDL	PQL	Results	Q	Units	Analyzed	Time	By	Analytical Batch
1,2-Dibromoethane	SW8260B	1	1.7	9.2	ND		ug/Kg	04/07/18	4:13	NP	430812
Chlorobenzene	SW8260B	1	1.7	9.2	ND		ug/Kg	04/07/18	4:13	NP	430812
Ethyl Benzene	SW8260B	1	1.5	9.2	ND		ug/Kg	04/07/18	4:13	NP	430812
1,1,1,2-Tetrachloroethane	SW8260B	1	1.8	9.2	ND		ug/Kg	04/07/18	4:13	NP	430812
m,p-Xylene	SW8260B	1	2.9	9.2	ND		ug/Kg	04/07/18	4:13	NP	430812
o-Xylene	SW8260B	1	1.6	9.2	ND		ug/Kg	04/07/18	4:13	NP	430812
Styrene	SW8260B	1	1.5	9.2	ND		ug/Kg	04/07/18	4:13	NP	430812
Bromoform	SW8260B	1	1.5	9.2	ND		ug/Kg	04/07/18	4:13	NP	430812
Isopropyl Benzene	SW8260B	1	1.5	9.2	ND		ug/Kg	04/07/18	4:13	NP	430812
n-Propylbenzene	SW8260B	1	1.4	9.2	ND		ug/Kg	04/07/18	4:13	NP	430812
Bromobenzene	SW8260B	1	1.6	9.2	ND		ug/Kg	04/07/18	4:13	NP	430812
1,1,2,2-Tetrachloroethane	SW8260B	1	1.8	9.2	ND		ug/Kg	04/07/18	4:13	NP	430812
2-Chlorotoluene	SW8260B	1	1.6	9.2	ND		ug/Kg	04/07/18	4:13	NP	430812
1,3,5-Trimethylbenzene	SW8260B	1	1.4	9.2	ND		ug/Kg	04/07/18	4:13	NP	430812
1,2,3-Trichloropropane	SW8260B	1	1.8	9.2	ND		ug/Kg	04/07/18	4:13	NP	430812
4-Chlorotoluene	SW8260B	1	1.5	9.2	ND		ug/Kg	04/07/18	4:13	NP	430812
tert-Butylbenzene	SW8260B	1	1.5	9.2	ND		ug/Kg	04/07/18	4:13	NP	430812
1,2,4-Trimethylbenzene	SW8260B	1	1.3	9.2	ND		ug/Kg	04/07/18	4:13	NP	430812
sec-Butyl Benzene	SW8260B	1	1.4	9.2	ND		ug/Kg	04/07/18	4:13	NP	430812
p-Isopropyltoluene	SW8260B	1	1.3	9.2	ND		ug/Kg	04/07/18	4:13	NP	430812
1,3-Dichlorobenzene	SW8260B	1	1.5	9.2	ND		ug/Kg	04/07/18	4:13	NP	430812
1,4-Dichlorobenzene	SW8260B	1	1.6	9.2	ND		ug/Kg	04/07/18	4:13	NP	430812
n-Butylbenzene	SW8260B	1	1.3	9.2	ND		ug/Kg	04/07/18	4:13	NP	430812
1,2-Dichlorobenzene	SW8260B	1	1.6	9.2	ND		ug/Kg	04/07/18	4:13	NP	430812
1,2-Dibromo-3-Chloropropane	SW8260B	1	1.7	9.2	ND		ug/Kg	04/07/18	4:13	NP	430812
Hexachlorobutadiene	SW8260B	1	1.3	9.2	ND		ug/Kg	04/07/18	4:13	NP	430812
1,2,4-Trichlorobenzene	SW8260B	1	1.4	9.2	ND		ug/Kg	04/07/18	4:13	NP	430812
Naphthalene	SW8260B	1	1.5	9.2	ND		ug/Kg	04/07/18	4:13	NP	430812
1,2,3-Trichlorobenzene	SW8260B	1	1.5	9.2	ND		ug/Kg	04/07/18	4:13	NP	430812
2-Butanone	SW8260B	1	2.1	9.2	ND		ug/Kg	04/07/18	4:13	NP	430812
(S) Dibromofluoromethane	SW8260B		59.8 - 148		**97.4**		%	04/07/18	4:13	NP	430812
(S) Toluene-d8	SW8260B		55.2 - 133		**115**		%	04/07/18	4:13	NP	430812
(S) 4-Bromofluorobenzene	SW8260B		55.8 - 141		**101**		%	04/07/18	4:13	NP	430812

Torrent LABORATORY, INC.

SAMPLE RESULTS

Report prepared for: Peter Langtry
Cornerstone Earth Group

Date/Time Received: 04/04/18, 4:15 pm
Date Reported: 04/09/18

Client Sample ID:	EB-18 (4.5-5)	**Lab Sample ID:**	1804039-005B
Project Name/Location:	1433-1493 El Camino Real	**Sample Matrix:**	Soil
Project Number:	958-1-5		
Date/Time Sampled:	04/04/18 / 13:27		
SDG:			

Prep Method:	5035GRO	**Prep Batch Date/Time:**	4/6/18	6:39:00PM
Prep Batch ID:	1104071	**Prep Analyst:**	NPAR	

Parameters:	Analysis Method	DF	MDL	PQL	Results	Q	Units	Analyzed	Time	By	Analytical Batch
TPH(Gasoline)	8260TPH	1	40	92	ND		ug/Kg	04/07/18	4:13	NP	430812
(S) 4-Bromofluorobenzene	8260TPH		43.9 - 127		**55.9**		%	04/07/18	4:13	NP	430812

Torrent LABORATORY, INC.

SAMPLE RESULTS

Report prepared for: Peter Langtry
Cornerstone Earth Group

Date/Time Received: 04/04/18, 4:15 pm
Date Reported: 04/09/18

Client Sample ID:	EB-18 (9.5-10)	**Lab Sample ID:**	1804039-006A
Project Name/Location:	1433-1493 El Camino Real	**Sample Matrix:**	Soil
Project Number:	958-1-5		
Date/Time Sampled:	04/04/18 / 13:30		
SDG:			

Prep Method:	3546_TPH	**Prep Batch Date/Time:**	4/5/18 6:00:00PM
Prep Batch ID:	1104005	**Prep Analyst:**	SNARASIMHAN

Parameters:	Analysis Method	DF	MDL	PQL	Results	Q	Units	Analyzed	Time	By	Analytical Batch
TPH as Diesel	SW8015B	1	0.85	2.0	ND		mg/Kg	04/06/18	15:04	mk	430765
			Acceptance Limits								
Pentacosane (S)	SW8015B		59 - 129		**84.0**		%	04/06/18	15:04	mk	430765

Torrent LABORATORY, INC.

SAMPLE RESULTS

Report prepared for: Peter Langtry
Cornerstone Earth Group

Date/Time Received: 04/04/18, 4:15 pm
Date Reported: 04/09/18

Client Sample ID:	EB-18 (9.5-10)	**Lab Sample ID:**	1804039-006B
Project Name/Location:	1433-1493 El Camino Real	**Sample Matrix:**	Soil
Project Number:	958-1-5		
Date/Time Sampled:	04/04/18 / 13:30		
SDG:			

Prep Method:	5035	**Prep Batch Date/Time:**	4/6/18	6:39:00PM
Prep Batch ID:	1104070	**Prep Analyst:**	NPAR	

Parameters:	Analysis Method	DF	MDL	PQL	Results	Q	Units	Analyzed	Time	By	Analytical Batch
Dichlorodifluoromethane	SW8260B	1	1.1	9.1	ND		ug/Kg	04/07/18	4:46	NP	430812
Chloromethane	SW8260B	1	1.7	9.1	ND		ug/Kg	04/07/18	4:46	NP	430812
Vinyl Chloride	SW8260B	1	1.9	9.1	ND		ug/Kg	04/07/18	4:46	NP	430812
Bromomethane	SW8260B	1	2.5	9.1	ND		ug/Kg	04/07/18	4:46	NP	430812
Chloroethane	SW8260B	1	2.8	9.1	ND		ug/Kg	04/07/18	4:46	NP	430812
Trichlorofluoromethane	SW8260B	1	1.9	9.1	ND		ug/Kg	04/07/18	4:46	NP	430812
1,1-Dichloroethene	SW8260B	1	1.9	9.1	ND		ug/Kg	04/07/18	4:46	NP	430812
Freon 113	SW8260B	1	1.7	9.1	ND		ug/Kg	04/07/18	4:46	NP	430812
Methylene Chloride	SW8260B	1	6.5	9.1	ND		ug/Kg	04/07/18	4:46	NP	430812
trans-1,2-Dichloroethene	SW8260B	1	1.9	9.1	ND		ug/Kg	04/07/18	4:46	NP	430812
MTBE	SW8260B	1	2.1	9.1	ND		ug/Kg	04/07/18	4:46	NP	430812
tert-Butanol	SW8260B	1	11	46	**67.5**		ug/Kg	04/07/18	4:46	NP	430812
Diisopropyl ether (DIPE)	SW8260B	1	2.1	9.1	ND		ug/Kg	04/07/18	4:46	NP	430812
1,1-Dichloroethane	SW8260B	1	2.0	9.1	ND		ug/Kg	04/07/18	4:46	NP	430812
ETBE	SW8260B	1	2.1	9.1	ND		ug/Kg	04/07/18	4:46	NP	430812
cis-1,2-Dichloroethene	SW8260B	1	2.0	9.1	ND		ug/Kg	04/07/18	4:46	NP	430812
2,2-Dichloropropane	SW8260B	1	1.7	9.1	ND		ug/Kg	04/07/18	4:46	NP	430812
Bromochloromethane	SW8260B	1	2.1	9.1	ND		ug/Kg	04/07/18	4:46	NP	430812
Chloroform	SW8260B	1	2.2	9.1	ND		ug/Kg	04/07/18	4:46	NP	430812
Carbon Tetrachloride	SW8260B	1	1.9	9.1	ND		ug/Kg	04/07/18	4:46	NP	430812
1,1,1-Trichloroethane	SW8260B	1	1.9	9.1	ND		ug/Kg	04/07/18	4:46	NP	430812
1,1-Dichloropropene	SW8260B	1	1.8	9.1	ND		ug/Kg	04/07/18	4:46	NP	430812
Benzene	SW8260B	1	2.0	9.1	ND		ug/Kg	04/07/18	4:46	NP	430812
TAME	SW8260B	1	2.1	9.1	ND		ug/Kg	04/07/18	4:46	NP	430812
1,2-Dichloroethane	SW8260B	1	2.1	9.1	ND		ug/Kg	04/07/18	4:46	NP	430812
Trichloroethylene	SW8260B	1	1.6	9.1	ND		ug/Kg	04/07/18	4:46	NP	430812
Dibromomethane	SW8260B	1	1.7	9.1	ND		ug/Kg	04/07/18	4:46	NP	430812
1,2-Dichloropropane	SW8260B	1	1.7	9.1	ND		ug/Kg	04/07/18	4:46	NP	430812
Bromodichloromethane	SW8260B	1	1.8	9.1	ND		ug/Kg	04/07/18	4:46	NP	430812
cis-1,3-Dichloropropene	SW8260B	1	1.5	9.1	ND		ug/Kg	04/07/18	4:46	NP	430812
Toluene	SW8260B	1	1.7	9.1	ND		ug/Kg	04/07/18	4:46	NP	430812
Tetrachloroethylene	SW8260B	1	1.5	9.1	ND		ug/Kg	04/07/18	4:46	NP	430812
trans-1,3-Dichloropropene	SW8260B	1	1.5	9.1	ND		ug/Kg	04/07/18	4:46	NP	430812
1,1,2-Trichloroethane	SW8260B	1	1.7	9.1	ND		ug/Kg	04/07/18	4:46	NP	430812
Dibromochloromethane	SW8260B	1	1.7	9.1	ND		ug/Kg	04/07/18	4:46	NP	430812
1,3-Dichloropropane	SW8260B	1	1.7	9.1	ND		ug/Kg	04/07/18	4:46	NP	430812

Torrent LABORATORY, INC.

SAMPLE RESULTS

Report prepared for: Peter Langtry
Cornerstone Earth Group

Date/Time Received: 04/04/18, 4:15 pm
Date Reported: 04/09/18

Client Sample ID:	EB-18 (9.5-10)	**Lab Sample ID:**	1804039-006B
Project Name/Location:	1433-1493 El Camino Real	**Sample Matrix:**	Soil
Project Number:	958-1-5		
Date/Time Sampled:	04/04/18 / 13:30		
SDG:			

Prep Method:	5035	**Prep Batch Date/Time:**	4/6/18	6:39:00PM
Prep Batch ID:	1104070	**Prep Analyst:**	NPAR	

Parameters:	Analysis Method	DF	MDL	PQL	Results	Q	Units	Analyzed	Time	By	Analytical Batch
1,2-Dibromoethane	SW8260B	1	1.6	9.1	ND		ug/Kg	04/07/18	4:46	NP	430812
Chlorobenzene	SW8260B	1	1.7	9.1	ND		ug/Kg	04/07/18	4:46	NP	430812
Ethyl Benzene	SW8260B	1	1.5	9.1	ND		ug/Kg	04/07/18	4:46	NP	430812
1,1,1,2-Tetrachloroethane	SW8260B	1	1.8	9.1	ND		ug/Kg	04/07/18	4:46	NP	430812
m,p-Xylene	SW8260B	1	2.9	9.1	ND		ug/Kg	04/07/18	4:46	NP	430812
o-Xylene	SW8260B	1	1.6	9.1	ND		ug/Kg	04/07/18	4:46	NP	430812
Styrene	SW8260B	1	1.5	9.1	ND		ug/Kg	04/07/18	4:46	NP	430812
Bromoform	SW8260B	1	1.5	9.1	ND		ug/Kg	04/07/18	4:46	NP	430812
Isopropyl Benzene	SW8260B	1	1.5	9.1	ND		ug/Kg	04/07/18	4:46	NP	430812
n-Propylbenzene	SW8260B	1	1.4	9.1	ND		ug/Kg	04/07/18	4:46	NP	430812
Bromobenzene	SW8260B	1	1.6	9.1	ND		ug/Kg	04/07/18	4:46	NP	430812
1,1,2,2-Tetrachloroethane	SW8260B	1	1.8	9.1	ND		ug/Kg	04/07/18	4:46	NP	430812
2-Chlorotoluene	SW8260B	1	1.6	9.1	ND		ug/Kg	04/07/18	4:46	NP	430812
1,3,5-Trimethylbenzene	SW8260B	1	1.4	9.1	ND		ug/Kg	04/07/18	4:46	NP	430812
1,2,3-Trichloropropane	SW8260B	1	1.7	9.1	ND		ug/Kg	04/07/18	4:46	NP	430812
4-Chlorotoluene	SW8260B	1	1.5	9.1	ND		ug/Kg	04/07/18	4:46	NP	430812
tert-Butylbenzene	SW8260B	1	1.5	9.1	ND		ug/Kg	04/07/18	4:46	NP	430812
1,2,4-Trimethylbenzene	SW8260B	1	1.2	9.1	ND		ug/Kg	04/07/18	4:46	NP	430812
sec-Butyl Benzene	SW8260B	1	1.4	9.1	ND		ug/Kg	04/07/18	4:46	NP	430812
p-Isopropyltoluene	SW8260B	1	1.3	9.1	ND		ug/Kg	04/07/18	4:46	NP	430812
1,3-Dichlorobenzene	SW8260B	1	1.5	9.1	ND		ug/Kg	04/07/18	4:46	NP	430812
1,4-Dichlorobenzene	SW8260B	1	1.6	9.1	ND		ug/Kg	04/07/18	4:46	NP	430812
n-Butylbenzene	SW8260B	1	1.3	9.1	ND		ug/Kg	04/07/18	4:46	NP	430812
1,2-Dichlorobenzene	SW8260B	1	1.6	9.1	ND		ug/Kg	04/07/18	4:46	NP	430812
1,2-Dibromo-3-Chloropropane	SW8260B	1	1.7	9.1	ND		ug/Kg	04/07/18	4:46	NP	430812
Hexachlorobutadiene	SW8260B	1	1.2	9.1	ND		ug/Kg	04/07/18	4:46	NP	430812
1,2,4-Trichlorobenzene	SW8260B	1	1.3	9.1	ND		ug/Kg	04/07/18	4:46	NP	430812
Naphthalene	SW8260B	1	1.5	9.1	ND		ug/Kg	04/07/18	4:46	NP	430812
1,2,3-Trichlorobenzene	SW8260B	1	1.5	9.1	ND		ug/Kg	04/07/18	4:46	NP	430812
2-Butanone	SW8260B	1	2.1	9.1	ND		ug/Kg	04/07/18	4:46	NP	430812
(S) Dibromofluoromethane	SW8260B		59.8 - 148		**105**		%	04/07/18	4:46	NP	430812
(S) Toluene-d8	SW8260B		55.2 - 133		**109**		%	04/07/18	4:46	NP	430812
(S) 4-Bromofluorobenzene	SW8260B		55.8 - 141		**103**		%	04/07/18	4:46	NP	430812

Torrent LABORATORY, INC.

SAMPLE RESULTS

Report prepared for: Peter Langtry
Cornerstone Earth Group

Date/Time Received: 04/04/18, 4:15 pm
Date Reported: 04/09/18

Client Sample ID:	EB-18 (9.5-10)	**Lab Sample ID:**	1804039-006B
Project Name/Location:	1433-1493 El Camino Real	**Sample Matrix:**	Soil
Project Number:	958-1-5		
Date/Time Sampled:	04/04/18 / 13:30		
SDG:			

Prep Method:	5035GRO	**Prep Batch Date/Time:**	4/6/18	6:39:00PM
Prep Batch ID:	1104071	**Prep Analyst:**	NPAR	

Parameters:	Analysis Method	DF	MDL	PQL	Results	Q	Units	Analyzed	Time	By	Analytical Batch
TPH(Gasoline)	8260TPH	1	39	91	ND		ug/Kg	04/07/18	4:46	NP	430812
(S) 4-Bromofluorobenzene	8260TPH		43.9 - 127		**63.5**		%	04/07/18	4:46	NP	430812

Torrent LABORATORY, INC.

SAMPLE RESULTS

Report prepared for: Peter Langtry
Cornerstone Earth Group

Date/Time Received: 04/04/18, 4:15 pm
Date Reported: 04/09/18

Client Sample ID:	EB-18 (14.5-15)	**Lab Sample ID:**	1804039-007A
Project Name/Location:	1433-1493 El Camino Real	**Sample Matrix:**	Soil
Project Number:	958-1-5		
Date/Time Sampled:	04/04/18 / 13:35		
SDG:			

Prep Method:	3546_TPH	**Prep Batch Date/Time:**	4/5/18 6:00:00PM
Prep Batch ID:	1104005	**Prep Analyst:**	SNARASIMHAN

Parameters:	Analysis Method	DF	MDL	PQL	Results	Q	Units	Analyzed	Time	By	Analytical Batch
TPH as Diesel	SW8015B	1	0.85	2.0	**3.05**	x	mg/Kg	04/06/18	15:27	mk	430765
			Acceptance Limits								
Pentacosane (S)	SW8015B		59 - 129		**94.7**		%	04/06/18	15:27	mk	430765

NOTE: x-not typical of Diesel ref. std: peaks within Diesel range quantified as diesel

Torrent LABORATORY, INC.

SAMPLE RESULTS

Report prepared for: Peter Langtry
Cornerstone Earth Group

Date/Time Received: 04/04/18, 4:15 pm
Date Reported: 04/09/18

Client Sample ID:	EB-18 (14.5-15)	**Lab Sample ID:**	1804039-007B
Project Name/Location:	1433-1493 El Camino Real	**Sample Matrix:**	Soil
Project Number:	958-1-5		
Date/Time Sampled:	04/04/18 / 13:35		
SDG:			

Prep Method:	5035	**Prep Batch Date/Time:**	4/7/18	8:12:00AM
Prep Batch ID:	1104078	**Prep Analyst:**	NPAR	

Parameters:	Analysis Method	DF	MDL	PQL	Results	Q	Units	Analyzed	Time	By	Analytical Batch
Dichlorodifluoromethane	SW8260B	1	1.2	9.9	ND		ug/Kg	04/07/18	12:58	NP	430825
Chloromethane	SW8260B	1	1.8	9.9	ND		ug/Kg	04/07/18	12:58	NP	430825
Vinyl Chloride	SW8260B	1	2.0	9.9	ND		ug/Kg	04/07/18	12:58	NP	430825
Bromomethane	SW8260B	1	2.7	9.9	ND		ug/Kg	04/07/18	12:58	NP	430825
Chloroethane	SW8260B	1	3.0	9.9	ND		ug/Kg	04/07/18	12:58	NP	430825
Trichlorofluoromethane	SW8260B	1	2.0	9.9	ND		ug/Kg	04/07/18	12:58	NP	430825
1,1-Dichloroethene	SW8260B	1	2.0	9.9	ND		ug/Kg	04/07/18	12:58	NP	430825
Freon 113	SW8260B	1	1.9	9.9	ND		ug/Kg	04/07/18	12:58	NP	430825
Methylene Chloride	SW8260B	1	7.0	9.9	ND		ug/Kg	04/07/18	12:58	NP	430825
trans-1,2-Dichloroethene	SW8260B	1	2.1	9.9	ND		ug/Kg	04/07/18	12:58	NP	430825
MTBE	SW8260B	1	2.3	9.9	ND		ug/Kg	04/07/18	12:58	NP	430825
tert-Butanol	SW8260B	1	11	50	ND		ug/Kg	04/07/18	12:58	NP	430825
Diisopropyl ether (DIPE)	SW8260B	1	2.3	9.9	ND		ug/Kg	04/07/18	12:58	NP	430825
1,1-Dichloroethane	SW8260B	1	2.2	9.9	ND		ug/Kg	04/07/18	12:58	NP	430825
ETBE	SW8260B	1	2.3	9.9	ND		ug/Kg	04/07/18	12:58	NP	430825
cis-1,2-Dichloroethene	SW8260B	1	2.2	9.9	ND		ug/Kg	04/07/18	12:58	NP	430825
2,2-Dichloropropane	SW8260B	1	1.9	9.9	ND		ug/Kg	04/07/18	12:58	NP	430825
Bromochloromethane	SW8260B	1	2.3	9.9	ND		ug/Kg	04/07/18	12:58	NP	430825
Chloroform	SW8260B	1	2.3	9.9	ND		ug/Kg	04/07/18	12:58	NP	430825
Carbon Tetrachloride	SW8260B	1	2.0	9.9	ND		ug/Kg	04/07/18	12:58	NP	430825
1,1,1-Trichloroethane	SW8260B	1	2.1	9.9	ND		ug/Kg	04/07/18	12:58	NP	430825
1,1-Dichloropropene	SW8260B	1	2.0	9.9	ND		ug/Kg	04/07/18	12:58	NP	430825
Benzene	SW8260B	1	2.2	9.9	ND		ug/Kg	04/07/18	12:58	NP	430825
TAME	SW8260B	1	2.2	9.9	ND		ug/Kg	04/07/18	12:58	NP	430825
1,2-Dichloroethane	SW8260B	1	2.3	9.9	ND		ug/Kg	04/07/18	12:58	NP	430825
Trichloroethylene	SW8260B	1	1.8	9.9	ND		ug/Kg	04/07/18	12:58	NP	430825
Dibromomethane	SW8260B	1	1.8	9.9	ND		ug/Kg	04/07/18	12:58	NP	430825
1,2-Dichloropropane	SW8260B	1	1.9	9.9	ND		ug/Kg	04/07/18	12:58	NP	430825
Bromodichloromethane	SW8260B	1	2.0	9.9	ND		ug/Kg	04/07/18	12:58	NP	430825
cis-1,3-Dichloropropene	SW8260B	1	1.6	9.9	ND		ug/Kg	04/07/18	12:58	NP	430825
Toluene	SW8260B	1	1.8	9.9	ND		ug/Kg	04/07/18	12:58	NP	430825
Tetrachloroethylene	SW8260B	1	1.6	9.9	ND		ug/Kg	04/07/18	12:58	NP	430825
trans-1,3-Dichloropropene	SW8260B	1	1.6	9.9	ND		ug/Kg	04/07/18	12:58	NP	430825
1,1,2-Trichloroethane	SW8260B	1	1.8	9.9	ND		ug/Kg	04/07/18	12:58	NP	430825
Dibromochloromethane	SW8260B	1	1.9	9.9	ND		ug/Kg	04/07/18	12:58	NP	430825
1,3-Dichloropropane	SW8260B	1	1.8	9.9	ND		ug/Kg	04/07/18	12:58	NP	430825

Torrent LABORATORY, INC.

SAMPLE RESULTS

Report prepared for: Peter Langtry
Cornerstone Earth Group

Date/Time Received: 04/04/18, 4:15 pm
Date Reported: 04/09/18

Client Sample ID:	EB-18 (14.5-15)	**Lab Sample ID:**	1804039-007B
Project Name/Location:	1433-1493 El Camino Real	**Sample Matrix:**	Soil
Project Number:	958-1-5		
Date/Time Sampled:	04/04/18 / 13:35		
SDG:			

Prep Method:	5035	**Prep Batch Date/Time:**	4/7/18	8:12:00AM
Prep Batch ID:	1104078	**Prep Analyst:**	NPAR	

Parameters:	Analysis Method	DF	MDL	PQL	Results	Q	Units	Analyzed	Time	By	Analytical Batch
1,2-Dibromoethane	SW8260B	1	1.8	9.9	ND		ug/Kg	04/07/18	12:58	NP	430825
Chlorobenzene	SW8260B	1	1.8	9.9	ND		ug/Kg	04/07/18	12:58	NP	430825
Ethyl Benzene	SW8260B	1	1.6	9.9	ND		ug/Kg	04/07/18	12:58	NP	430825
1,1,1,2-Tetrachloroethane	SW8260B	1	1.9	9.9	ND		ug/Kg	04/07/18	12:58	NP	430825
m,p-Xylene	SW8260B	1	3.1	9.9	ND		ug/Kg	04/07/18	12:58	NP	430825
o-Xylene	SW8260B	1	1.7	9.9	ND		ug/Kg	04/07/18	12:58	NP	430825
Styrene	SW8260B	1	1.6	9.9	ND		ug/Kg	04/07/18	12:58	NP	430825
Bromoform	SW8260B	1	1.7	9.9	ND		ug/Kg	04/07/18	12:58	NP	430825
Isopropyl Benzene	SW8260B	1	1.6	9.9	ND		ug/Kg	04/07/18	12:58	NP	430825
n-Propylbenzene	SW8260B	1	1.6	9.9	ND		ug/Kg	04/07/18	12:58	NP	430825
Bromobenzene	SW8260B	1	1.7	9.9	ND		ug/Kg	04/07/18	12:58	NP	430825
1,1,2,2-Tetrachloroethane	SW8260B	1	1.9	9.9	ND		ug/Kg	04/07/18	12:58	NP	430825
2-Chlorotoluene	SW8260B	1	1.7	9.9	ND		ug/Kg	04/07/18	12:58	NP	430825
1,3,5-Trimethylbenzene	SW8260B	1	1.6	9.9	ND		ug/Kg	04/07/18	12:58	NP	430825
1,2,3-Trichloropropane	SW8260B	1	1.9	9.9	ND		ug/Kg	04/07/18	12:58	NP	430825
4-Chlorotoluene	SW8260B	1	1.6	9.9	ND		ug/Kg	04/07/18	12:58	NP	430825
tert-Butylbenzene	SW8260B	1	1.6	9.9	ND		ug/Kg	04/07/18	12:58	NP	430825
1,2,4-Trimethylbenzene	SW8260B	1	1.3	9.9	ND		ug/Kg	04/07/18	12:58	NP	430825
sec-Butyl Benzene	SW8260B	1	1.5	9.9	ND		ug/Kg	04/07/18	12:58	NP	430825
p-Isopropyltoluene	SW8260B	1	1.5	9.9	ND		ug/Kg	04/07/18	12:58	NP	430825
1,3-Dichlorobenzene	SW8260B	1	1.7	9.9	ND		ug/Kg	04/07/18	12:58	NP	430825
1,4-Dichlorobenzene	SW8260B	1	1.7	9.9	ND		ug/Kg	04/07/18	12:58	NP	430825
n-Butylbenzene	SW8260B	1	1.4	9.9	ND		ug/Kg	04/07/18	12:58	NP	430825
1,2-Dichlorobenzene	SW8260B	1	1.8	9.9	ND		ug/Kg	04/07/18	12:58	NP	430825
1,2-Dibromo-3-Chloropropane	SW8260B	1	1.8	9.9	ND		ug/Kg	04/07/18	12:58	NP	430825
Hexachlorobutadiene	SW8260B	1	1.4	9.9	ND		ug/Kg	04/07/18	12:58	NP	430825
1,2,4-Trichlorobenzene	SW8260B	1	1.5	9.9	ND		ug/Kg	04/07/18	12:58	NP	430825
Naphthalene	SW8260B	1	1.7	9.9	ND		ug/Kg	04/07/18	12:58	NP	430825
1,2,3-Trichlorobenzene	SW8260B	1	1.7	9.9	ND		ug/Kg	04/07/18	12:58	NP	430825
2-Butanone	SW8260B	1	2.3	9.9	ND		ug/Kg	04/07/18	12:58	NP	430825
(S) Dibromofluoromethane	SW8260B		59.8 - 148		**112**		%	04/07/18	12:58	NP	430825
(S) Toluene-d8	SW8260B		55.2 - 133		**114**		%	04/07/18	12:58	NP	430825
(S) 4-Bromofluorobenzene	SW8260B		55.8 - 141		**130**		%	04/07/18	12:58	NP	430825

Torrent LABORATORY, INC.

SAMPLE RESULTS

Report prepared for: Peter Langtry
Cornerstone Earth Group

Date/Time Received: 04/04/18, 4:15 pm
Date Reported: 04/09/18

Client Sample ID:	EB-18 (14.5-15)	**Lab Sample ID:**	1804039-007B
Project Name/Location:	1433-1493 El Camino Real	**Sample Matrix:**	Soil
Project Number:	958-1-5		
Date/Time Sampled:	04/04/18 / 13:35		
SDG:			

Prep Method:	5035GRO	**Prep Batch Date/Time:**	4/7/18	8:12:00AM
Prep Batch ID:	1104079	**Prep Analyst:**	NPAR	

Parameters:	Analysis Method	DF	MDL	PQL	Results	Q	Units	Analyzed	Time	By	Analytical Batch
TPH(Gasoline)	8260TPH	1	43	99	ND		ug/Kg	04/07/18	12:58	NP	430825
(S) 4-Bromofluorobenzene	8260TPH		43.9 - 127		**94.5**		%	04/07/18	12:58	NP	430825

Torrent LABORATORY, INC.

SAMPLE RESULTS

Report prepared for: Peter Langtry
Cornerstone Earth Group

Date/Time Received: 04/04/18, 4:15 pm
Date Reported: 04/09/18

Client Sample ID:	EB-22 (4.5-5)	**Lab Sample ID:**	1804039-009A
Project Name/Location:	1433-1493 El Camino Real	**Sample Matrix:**	Soil
Project Number:	958-1-5		
Date/Time Sampled:	04/04/18 / 14:01		
SDG:			

Prep Method:	3546_TPH	**Prep Batch Date/Time:**	4/5/18 6:00:00PM
Prep Batch ID:	1104005	**Prep Analyst:**	SNARASIMHAN

Parameters:	Analysis Method	DF	MDL	PQL	Results	Q	Units	Analyzed	Time	By	Analytical Batch
TPH as Diesel	SW8015B	1	0.85	2.0	**2.97**	x	mg/Kg	04/06/18	15:50	mk	430765
			Acceptance Limits								
Pentacosane (S)	SW8015B		59 - 129		**85.4**		%	04/06/18	15:50	mk	430765

NOTE: x-not typical of Diesel ref. std: peaks within Diesel range quantified as diesel

Torrent LABORATORY, INC.

SAMPLE RESULTS

Report prepared for: Peter Langtry
Cornerstone Earth Group

Date/Time Received: 04/04/18, 4:15 pm
Date Reported: 04/09/18

Client Sample ID:	EB-22 (4.5-5)	**Lab Sample ID:**	1804039-009B
Project Name/Location:	1433-1493 El Camino Real	**Sample Matrix:**	Soil
Project Number:	958-1-5		
Date/Time Sampled:	04/04/18 / 14:01		
SDG:			

Prep Method:	5035	**Prep Batch Date/Time:**	4/7/18	8:12:00AM
Prep Batch ID:	1104078	**Prep Analyst:**	NPAR	

Parameters:	Analysis Method	DF	MDL	PQL	Results	Q	Units	Analyzed	Time	By	Analytical Batch
Dichlorodifluoromethane	SW8260B	1	1.8	15	ND		ug/Kg	04/07/18	13:34	NP	430825
Chloromethane	SW8260B	1	2.7	15	ND		ug/Kg	04/07/18	13:34	NP	430825
Vinyl Chloride	SW8260B	1	3.1	15	ND		ug/Kg	04/07/18	13:34	NP	430825
Bromomethane	SW8260B	1	4.0	15	ND		ug/Kg	04/07/18	13:34	NP	430825
Chloroethane	SW8260B	1	4.5	15	ND		ug/Kg	04/07/18	13:34	NP	430825
Trichlorofluoromethane	SW8260B	1	3.1	15	ND		ug/Kg	04/07/18	13:34	NP	430825
1,1-Dichloroethene	SW8260B	1	3.0	15	ND		ug/Kg	04/07/18	13:34	NP	430825
Freon 113	SW8260B	1	2.8	15	ND		ug/Kg	04/07/18	13:34	NP	430825
Methylene Chloride	SW8260B	1	11	15	ND		ug/Kg	04/07/18	13:34	NP	430825
trans-1,2-Dichloroethene	SW8260B	1	3.1	15	ND		ug/Kg	04/07/18	13:34	NP	430825
MTBE	SW8260B	1	3.5	15	ND		ug/Kg	04/07/18	13:34	NP	430825
tert-Butanol	SW8260B	1	17	75	**422**		ug/Kg	04/07/18	13:34	NP	430825
Diisopropyl ether (DIPE)	SW8260B	1	3.4	15	ND		ug/Kg	04/07/18	13:34	NP	430825
1,1-Dichloroethane	SW8260B	1	3.3	15	ND		ug/Kg	04/07/18	13:34	NP	430825
ETBE	SW8260B	1	3.4	15	ND		ug/Kg	04/07/18	13:34	NP	430825
cis-1,2-Dichloroethene	SW8260B	1	3.3	15	ND		ug/Kg	04/07/18	13:34	NP	430825
2,2-Dichloropropane	SW8260B	1	2.9	15	ND		ug/Kg	04/07/18	13:34	NP	430825
Bromochloromethane	SW8260B	1	3.5	15	ND		ug/Kg	04/07/18	13:34	NP	430825
Chloroform	SW8260B	1	3.5	15	ND		ug/Kg	04/07/18	13:34	NP	430825
Carbon Tetrachloride	SW8260B	1	3.1	15	ND		ug/Kg	04/07/18	13:34	NP	430825
1,1,1-Trichloroethane	SW8260B	1	3.1	15	ND		ug/Kg	04/07/18	13:34	NP	430825
1,1-Dichloropropene	SW8260B	1	3.0	15	ND		ug/Kg	04/07/18	13:34	NP	430825
Benzene	SW8260B	1	3.3	15	ND		ug/Kg	04/07/18	13:34	NP	430825
TAME	SW8260B	1	3.4	15	ND		ug/Kg	04/07/18	13:34	NP	430825
1,2-Dichloroethane	SW8260B	1	3.5	15	ND		ug/Kg	04/07/18	13:34	NP	430825
Trichloroethylene	SW8260B	1	2.7	15	ND		ug/Kg	04/07/18	13:34	NP	430825
Dibromomethane	SW8260B	1	2.8	15	ND		ug/Kg	04/07/18	13:34	NP	430825
1,2-Dichloropropane	SW8260B	1	2.8	15	ND		ug/Kg	04/07/18	13:34	NP	430825
Bromodichloromethane	SW8260B	1	3.0	15	ND		ug/Kg	04/07/18	13:34	NP	430825
cis-1,3-Dichloropropene	SW8260B	1	2.4	15	ND		ug/Kg	04/07/18	13:34	NP	430825
Toluene	SW8260B	1	2.7	15	ND		ug/Kg	04/07/18	13:34	NP	430825
Tetrachloroethylene	SW8260B	1	2.5	15	ND		ug/Kg	04/07/18	13:34	NP	430825
trans-1,3-Dichloropropene	SW8260B	1	2.5	15	ND		ug/Kg	04/07/18	13:34	NP	430825
1,1,2-Trichloroethane	SW8260B	1	2.8	15	ND		ug/Kg	04/07/18	13:34	NP	430825
Dibromochloromethane	SW8260B	1	2.8	15	ND		ug/Kg	04/07/18	13:34	NP	430825
1,3-Dichloropropane	SW8260B	1	2.8	15	ND		ug/Kg	04/07/18	13:34	NP	430825

Torrent LABORATORY, INC.

SAMPLE RESULTS

Report prepared for: Peter Langtry
Cornerstone Earth Group

Date/Time Received: 04/04/18, 4:15 pm
Date Reported: 04/09/18

Client Sample ID:	EB-22 (4.5-5)	**Lab Sample ID:**	1804039-009B
Project Name/Location:	1433-1493 El Camino Real	**Sample Matrix:**	Soil
Project Number:	958-1-5		
Date/Time Sampled:	04/04/18 / 14:01		
SDG:			

Prep Method:	5035	**Prep Batch Date/Time:**	4/7/18	8:12:00AM
Prep Batch ID:	1104078	**Prep Analyst:**	NPAR	

Parameters:	Analysis Method	DF	MDL	PQL	Results	Q	Units	Analyzed	Time	By	Analytical Batch
1,2-Dibromoethane	SW8260B	1	2.7	15	ND		ug/Kg	04/07/18	13:34	NP	430825
Chlorobenzene	SW8260B	1	2.7	15	ND		ug/Kg	04/07/18	13:34	NP	430825
Ethyl Benzene	SW8260B	1	2.5	15	ND		ug/Kg	04/07/18	13:34	NP	430825
1,1,1,2-Tetrachloroethane	SW8260B	1	2.9	15	ND		ug/Kg	04/07/18	13:34	NP	430825
m,p-Xylene	SW8260B	1	4.7	15	ND		ug/Kg	04/07/18	13:34	NP	430825
o-Xylene	SW8260B	1	2.6	15	ND		ug/Kg	04/07/18	13:34	NP	430825
Styrene	SW8260B	1	2.5	15	ND		ug/Kg	04/07/18	13:34	NP	430825
Bromoform	SW8260B	1	2.5	15	ND		ug/Kg	04/07/18	13:34	NP	430825
Isopropyl Benzene	SW8260B	1	2.4	15	ND		ug/Kg	04/07/18	13:34	NP	430825
n-Propylbenzene	SW8260B	1	2.3	15	ND		ug/Kg	04/07/18	13:34	NP	430825
Bromobenzene	SW8260B	1	2.6	15	ND		ug/Kg	04/07/18	13:34	NP	430825
1,1,2,2-Tetrachloroethane	SW8260B	1	2.9	15	ND		ug/Kg	04/07/18	13:34	NP	430825
2-Chlorotoluene	SW8260B	1	2.6	15	ND		ug/Kg	04/07/18	13:34	NP	430825
1,3,5-Trimethylbenzene	SW8260B	1	2.4	15	ND		ug/Kg	04/07/18	13:34	NP	430825
1,2,3-Trichloropropane	SW8260B	1	2.9	15	ND		ug/Kg	04/07/18	13:34	NP	430825
4-Chlorotoluene	SW8260B	1	2.5	15	ND		ug/Kg	04/07/18	13:34	NP	430825
tert-Butylbenzene	SW8260B	1	2.4	15	ND		ug/Kg	04/07/18	13:34	NP	430825
1,2,4-Trimethylbenzene	SW8260B	1	2.0	15	ND		ug/Kg	04/07/18	13:34	NP	430825
sec-Butyl Benzene	SW8260B	1	2.3	15	ND		ug/Kg	04/07/18	13:34	NP	430825
p-Isopropyltoluene	SW8260B	1	2.2	15	ND		ug/Kg	04/07/18	13:34	NP	430825
1,3-Dichlorobenzene	SW8260B	1	2.5	15	ND		ug/Kg	04/07/18	13:34	NP	430825
1,4-Dichlorobenzene	SW8260B	1	2.6	15	ND		ug/Kg	04/07/18	13:34	NP	430825
n-Butylbenzene	SW8260B	1	2.2	15	ND		ug/Kg	04/07/18	13:34	NP	430825
1,2-Dichlorobenzene	SW8260B	1	2.7	15	ND		ug/Kg	04/07/18	13:34	NP	430825
1,2-Dibromo-3-Chloropropane	SW8260B	1	2.8	15	ND		ug/Kg	04/07/18	13:34	NP	430825
Hexachlorobutadiene	SW8260B	1	2.1	15	ND		ug/Kg	04/07/18	13:34	NP	430825
1,2,4-Trichlorobenzene	SW8260B	1	2.2	15	ND		ug/Kg	04/07/18	13:34	NP	430825
Naphthalene	SW8260B	1	2.5	15	ND		ug/Kg	04/07/18	13:34	NP	430825
1,2,3-Trichlorobenzene	SW8260B	1	2.5	15	ND		ug/Kg	04/07/18	13:34	NP	430825
2-Butanone	SW8260B	1	3.4	15	ND		ug/Kg	04/07/18	13:34	NP	430825
(S) Dibromofluoromethane	SW8260B		59.8 - 148		**100**		%	04/07/18	13:34	NP	430825
(S) Toluene-d8	SW8260B		55.2 - 133		**107**		%	04/07/18	13:34	NP	430825
(S) 4-Bromofluorobenzene	SW8260B		55.8 - 141		**120**		%	04/07/18	13:34	NP	430825

Torrent LABORATORY, INC.

SAMPLE RESULTS

Report prepared for: Peter Langtry
Cornerstone Earth Group

Date/Time Received: 04/04/18, 4:15 pm
Date Reported: 04/09/18

Client Sample ID:	EB-22 (4.5-5)	**Lab Sample ID:**	1804039-009B
Project Name/Location:	1433-1493 El Camino Real	**Sample Matrix:**	Soil
Project Number:	958-1-5		
Date/Time Sampled:	04/04/18 / 14:01		
SDG:			

Prep Method:	5035GRO	**Prep Batch Date/Time:**	4/7/18	8:12:00AM
Prep Batch ID:	1104079	**Prep Analyst:**	NPAR	

Parameters:	Analysis Method	DF	MDL	PQL	Results	Q	Units	Analyzed	Time	By	Analytical Batch
TPH(Gasoline)	8260TPH	1	65	150	ND		ug/Kg	04/07/18	13:34	NP	430825
(S) 4-Bromofluorobenzene	8260TPH		43.9 - 127		**111**		%	04/07/18	13:34	NP	430825

Torrent LABORATORY, INC.

SAMPLE RESULTS

Report prepared for: Peter Langtry
Cornerstone Earth Group

Date/Time Received: 04/04/18, 4:15 pm
Date Reported: 04/09/18

Client Sample ID:	EB-22 (9.5-10)	**Lab Sample ID:**	1804039-010A
Project Name/Location:	1433-1493 El Camino Real	**Sample Matrix:**	Soil
Project Number:	958-1-5		
Date/Time Sampled:	04/04/18 / 14:04		
SDG:			

Prep Method:	3546_TPH	**Prep Batch Date/Time:**	4/5/18 6:00:00PM
Prep Batch ID:	1104005	**Prep Analyst:**	SNARASIMHAN

Parameters:	Analysis Method	DF	MDL	PQL	Results	Q	Units	Analyzed	Time	By	Analytical Batch
TPH as Diesel	SW8015B	1	0.85	2.0	**30.5**	x	mg/Kg	04/06/18	16:14	mk	430765
			Acceptance Limits								
Pentacosane (S)	SW8015B		59 - 129		**99.9**		%	04/06/18	16:14	mk	430765

NOTE: x- Chromatographic pattern does not resemble typical diesel reference standard; unknown organics within diesel range lighter than diesel quantified as diesel.

Torrent LABORATORY, INC.

SAMPLE RESULTS

Report prepared for: Peter Langtry
Cornerstone Earth Group

Date/Time Received: 04/04/18, 4:15 pm
Date Reported: 04/09/18

Client Sample ID:	EB-22 (9.5-10)	**Lab Sample ID:**	1804039-010B
Project Name/Location:	1433-1493 El Camino Real	**Sample Matrix:**	Soil
Project Number:	958-1-5		
Date/Time Sampled:	04/04/18 / 14:04		
SDG:			

Prep Method:	5035	**Prep Batch Date/Time:**	4/9/18	9:22:00AM
Prep Batch ID:	1104109	**Prep Analyst:**	NPAR	

Parameters:	Analysis Method	DF	MDL	PQL	Results	Q	Units	Analyzed	Time	By	Analytical Batch
Dichlorodifluoromethane	SW8260B	100	120	1000	ND		ug/Kg	04/09/18	14:25	NP	430855
Chloromethane	SW8260B	100	180	1000	ND		ug/Kg	04/09/18	14:25	NP	430855
Vinyl Chloride	SW8260B	100	200	1000	ND		ug/Kg	04/09/18	14:25	NP	430855
Bromomethane	SW8260B	100	270	1000	ND		ug/Kg	04/09/18	14:25	NP	430855
Chloroethane	SW8260B	100	300	1000	ND		ug/Kg	04/09/18	14:25	NP	430855
Trichlorofluoromethane	SW8260B	100	210	1000	ND		ug/Kg	04/09/18	14:25	NP	430855
1,1-Dichloroethene	SW8260B	100	200	1000	ND		ug/Kg	04/09/18	14:25	NP	430855
Freon 113	SW8260B	100	190	1000	ND		ug/Kg	04/09/18	14:25	NP	430855
Methylene Chloride	SW8260B	100	710	1000	ND		ug/Kg	04/09/18	14:25	NP	430855
trans-1,2-Dichloroethene	SW8260B	100	210	1000	ND		ug/Kg	04/09/18	14:25	NP	430855
MTBE	SW8260B	100	230	1000	ND		ug/Kg	04/09/18	14:25	NP	430855
tert-Butanol	SW8260B	100	1200	5000	ND		ug/Kg	04/09/18	14:25	NP	430855
Diisopropyl ether (DIPE)	SW8260B	100	230	1000	ND		ug/Kg	04/09/18	14:25	NP	430855
1,1-Dichloroethane	SW8260B	100	220	1000	ND		ug/Kg	04/09/18	14:25	NP	430855
ETBE	SW8260B	100	230	1000	ND		ug/Kg	04/09/18	14:25	NP	430855
cis-1,2-Dichloroethene	SW8260B	100	220	1000	ND		ug/Kg	04/09/18	14:25	NP	430855
2,2-Dichloropropane	SW8260B	100	190	1000	ND		ug/Kg	04/09/18	14:25	NP	430855
Bromochloromethane	SW8260B	100	230	1000	ND		ug/Kg	04/09/18	14:25	NP	430855
Chloroform	SW8260B	100	240	1000	ND		ug/Kg	04/09/18	14:25	NP	430855
Carbon Tetrachloride	SW8260B	100	210	1000	ND		ug/Kg	04/09/18	14:25	NP	430855
1,1,1-Trichloroethane	SW8260B	100	210	1000	ND		ug/Kg	04/09/18	14:25	NP	430855
1,1-Dichloropropene	SW8260B	100	200	1000	ND		ug/Kg	04/09/18	14:25	NP	430855
Benzene	SW8260B	100	220	1000	ND		ug/Kg	04/09/18	14:25	NP	430855
TAME	SW8260B	100	230	1000	ND		ug/Kg	04/09/18	14:25	NP	430855
1,2-Dichloroethane	SW8260B	100	230	1000	ND		ug/Kg	04/09/18	14:25	NP	430855
Trichloroethylene	SW8260B	100	180	1000	ND		ug/Kg	04/09/18	14:25	NP	430855
Dibromomethane	SW8260B	100	180	1000	ND		ug/Kg	04/09/18	14:25	NP	430855
1,2-Dichloropropane	SW8260B	100	190	1000	ND		ug/Kg	04/09/18	14:25	NP	430855
Bromodichloromethane	SW8260B	100	200	1000	ND		ug/Kg	04/09/18	14:25	NP	430855
cis-1,3-Dichloropropene	SW8260B	100	160	1000	ND		ug/Kg	04/09/18	14:25	NP	430855
Toluene	SW8260B	100	180	1000	ND		ug/Kg	04/09/18	14:25	NP	430855
Tetrachloroethylene	SW8260B	100	170	1000	ND		ug/Kg	04/09/18	14:25	NP	430855
trans-1,3-Dichloropropene	SW8260B	100	160	1000	ND		ug/Kg	04/09/18	14:25	NP	430855
1,1,2-Trichloroethane	SW8260B	100	180	1000	ND		ug/Kg	04/09/18	14:25	NP	430855
Dibromochloromethane	SW8260B	100	190	1000	ND		ug/Kg	04/09/18	14:25	NP	430855
1,3-Dichloropropane	SW8260B	100	180	1000	ND		ug/Kg	04/09/18	14:25	NP	430855

Torrent LABORATORY, INC.

SAMPLE RESULTS

Report prepared for: Peter Langtry
Cornerstone Earth Group

Date/Time Received: 04/04/18, 4:15 pm
Date Reported: 04/09/18

Client Sample ID:	EB-22 (9.5-10)	**Lab Sample ID:**	1804039-010B
Project Name/Location:	1433-1493 El Camino Real	**Sample Matrix:**	Soil
Project Number:	958-1-5		
Date/Time Sampled:	04/04/18 / 14:04		
SDG:			

Prep Method:	5035	**Prep Batch Date/Time:**	4/9/18	9:22:00AM
Prep Batch ID:	1104109	**Prep Analyst:**	NPAR	

Parameters:	Analysis Method	DF	MDL	PQL	Results	Q	Units	Analyzed	Time	By	Analytical Batch
1,2-Dibromoethane	SW8260B	100	180	1000	ND		ug/Kg	04/09/18	14:25	NP	430855
Chlorobenzene	SW8260B	100	180	1000	ND		ug/Kg	04/09/18	14:25	NP	430855
Ethyl Benzene	SW8260B	100	170	1000	ND		ug/Kg	04/09/18	14:25	NP	430855
1,1,1,2-Tetrachloroethane	SW8260B	100	190	1000	ND		ug/Kg	04/09/18	14:25	NP	430855
m,p-Xylene	SW8260B	100	320	1000	ND		ug/Kg	04/09/18	14:25	NP	430855
o-Xylene	SW8260B	100	170	1000	ND		ug/Kg	04/09/18	14:25	NP	430855
Styrene	SW8260B	100	160	1000	ND		ug/Kg	04/09/18	14:25	NP	430855
Bromoform	SW8260B	100	170	1000	ND		ug/Kg	04/09/18	14:25	NP	430855
Isopropyl Benzene	SW8260B	100	160	1000	ND		ug/Kg	04/09/18	14:25	NP	430855
n-Propylbenzene	SW8260B	100	160	1000	ND		ug/Kg	04/09/18	14:25	NP	430855
Bromobenzene	SW8260B	100	180	1000	ND		ug/Kg	04/09/18	14:25	NP	430855
1,1,2,2-Tetrachloroethane	SW8260B	100	190	1000	ND		ug/Kg	04/09/18	14:25	NP	430855
2-Chlorotoluene	SW8260B	100	180	1000	ND		ug/Kg	04/09/18	14:25	NP	430855
1,3,5-Trimethylbenzene	SW8260B	100	160	1000	ND		ug/Kg	04/09/18	14:25	NP	430855
1,2,3-Trichloropropane	SW8260B	100	190	1000	ND		ug/Kg	04/09/18	14:25	NP	430855
4-Chlorotoluene	SW8260B	100	160	1000	ND		ug/Kg	04/09/18	14:25	NP	430855
tert-Butylbenzene	SW8260B	100	160	1000	ND		ug/Kg	04/09/18	14:25	NP	430855
1,2,4-Trimethylbenzene	SW8260B	100	140	1000	**3130**		ug/Kg	04/09/18	14:25	NP	430855
sec-Butyl Benzene	SW8260B	100	160	1000	ND		ug/Kg	04/09/18	14:25	NP	430855
p-Isopropyltoluene	SW8260B	100	150	1000	ND		ug/Kg	04/09/18	14:25	NP	430855
1,3-Dichlorobenzene	SW8260B	100	170	1000	ND		ug/Kg	04/09/18	14:25	NP	430855
1,4-Dichlorobenzene	SW8260B	100	170	1000	ND		ug/Kg	04/09/18	14:25	NP	430855
n-Butylbenzene	SW8260B	100	150	1000	ND		ug/Kg	04/09/18	14:25	NP	430855
1,2-Dichlorobenzene	SW8260B	100	180	1000	ND		ug/Kg	04/09/18	14:25	NP	430855
1,2-Dibromo-3-Chloropropane	SW8260B	100	180	1000	ND		ug/Kg	04/09/18	14:25	NP	430855
Hexachlorobutadiene	SW8260B	100	140	1000	ND		ug/Kg	04/09/18	14:25	NP	430855
1,2,4-Trichlorobenzene	SW8260B	100	150	1000	ND		ug/Kg	04/09/18	14:25	NP	430855
Naphthalene	SW8260B	100	170	1000	ND		ug/Kg	04/09/18	14:25	NP	430855
1,2,3-Trichlorobenzene	SW8260B	100	170	1000	ND		ug/Kg	04/09/18	14:25	NP	430855
2-Butanone	SW8260B	100	230	1000	ND		ug/Kg	04/09/18	14:25	NP	430855
(S) Dibromofluoromethane	SW8260B		59.8 - 148		**102**		%	04/09/18	14:25	NP	430855
(S) Toluene-d8	SW8260B		55.2 - 133		**106**		%	04/09/18	14:25	NP	430855
(S) 4-Bromofluorobenzene	SW8260B		55.8 - 141		**105**		%	04/09/18	14:25	NP	430855

Torrent LABORATORY, INC.

SAMPLE RESULTS

Report prepared for: Peter Langtry
Cornerstone Earth Group

Date/Time Received: 04/04/18, 4:15 pm
Date Reported: 04/09/18

Client Sample ID:	EB-22 (9.5-10)	**Lab Sample ID:**	1804039-010B
Project Name/Location:	1433-1493 El Camino Real	**Sample Matrix:**	Soil
Project Number:	958-1-5		
Date/Time Sampled:	04/04/18 / 14:04		
SDG:			

Prep Method:	5035GRO	**Prep Batch Date/Time:**	4/9/18	9:22:00AM
Prep Batch ID:	1104111	**Prep Analyst:**	NPAR	

Parameters:	Analysis Method	DF	MDL	PQL	Results	Q	Units	Analyzed	Time	By	Analytical Batch
TPH(Gasoline)	8260TPH	100	4300	10000	**47500**	x	ug/Kg	04/09/18	14:25	NP	430855
(S) 4-Bromofluorobenzene	8260TPH		43.9 - 127		**127**	S	%	04/09/18	14:25	NP	430855

NOTE: x- Sample chromatogram does not resemble gasoline standard pattern. Results elevated due to heavy end hydrocarbons (possibly aged gasoline).
S-High surrogate due to matrix interference.

Torrent LABORATORY, INC.

SAMPLE RESULTS

Report prepared for: Peter Langtry
Cornerstone Earth Group

Date/Time Received: 04/04/18, 4:15 pm
Date Reported: 04/09/18

Client Sample ID:	EB-22 (16-16.5)	**Lab Sample ID:**	1804039-011A
Project Name/Location:	1433-1493 El Camino Real	**Sample Matrix:**	Soil
Project Number:	958-1-5		
Date/Time Sampled:	04/04/18 / 14:08		
SDG:			

Prep Method:	3546_TPH	**Prep Batch Date/Time:**	4/5/18 6:00:00PM
Prep Batch ID:	1104005	**Prep Analyst:**	SNARASIMHAN

Parameters:	Analysis Method	DF	MDL	PQL	Results	Q	Units	Analyzed	Time	By	Analytical Batch
TPH as Diesel	SW8015B	2	1.7	4.0	**55.9**	x	mg/Kg	04/08/18	9:56	mk	430765
			Acceptance Limits								
Pentacosane (S)	SW8015B		59 - 129		**93.4**		%	04/08/18	9:56	mk	430765

NOTE: x- Chromatographic pattern does not resemble typical diesel reference standard; unknown organics within diesel range lighter than diesel quantified as diesel.

Torrent LABORATORY, INC.

SAMPLE RESULTS

Report prepared for: Peter Langtry
Cornerstone Earth Group

Date/Time Received: 04/04/18, 4:15 pm
Date Reported: 04/09/18

Client Sample ID:	EB-22 (16-16.5)	**Lab Sample ID:**	1804039-011B
Project Name/Location:	1433-1493 El Camino Real	**Sample Matrix:**	Soil
Project Number:	958-1-5		
Date/Time Sampled:	04/04/18 / 14:08		
SDG:			

Prep Method:	5035	**Prep Batch Date/Time:**	4/9/18	9:22:00AM
Prep Batch ID:	1104109	**Prep Analyst:**	NPAR	

Parameters:	Analysis Method	DF	MDL	PQL	Results	Q	Units	Analyzed	Time	By	Analytical Batch
Dichlorodifluoromethane	SW8260B	100	130	1100	ND		ug/Kg	04/09/18	19:14	NP	430855
Chloromethane	SW8260B	100	200	1100	ND		ug/Kg	04/09/18	19:14	NP	430855
Vinyl Chloride	SW8260B	100	220	1100	ND		ug/Kg	04/09/18	19:14	NP	430855
Bromomethane	SW8260B	100	290	1100	ND		ug/Kg	04/09/18	19:14	NP	430855
Chloroethane	SW8260B	100	330	1100	ND		ug/Kg	04/09/18	19:14	NP	430855
Trichlorofluoromethane	SW8260B	100	220	1100	ND		ug/Kg	04/09/18	19:14	NP	430855
1,1-Dichloroethene	SW8260B	100	220	1100	ND		ug/Kg	04/09/18	19:14	NP	430855
Freon 113	SW8260B	100	200	1100	ND		ug/Kg	04/09/18	19:14	NP	430855
Methylene Chloride	SW8260B	100	770	1100	ND		ug/Kg	04/09/18	19:14	NP	430855
trans-1,2-Dichloroethene	SW8260B	100	230	1100	ND		ug/Kg	04/09/18	19:14	NP	430855
MTBE	SW8260B	100	250	1100	ND		ug/Kg	04/09/18	19:14	NP	430855
tert-Butanol	SW8260B	100	1200	5400	ND		ug/Kg	04/09/18	19:14	NP	430855
Diisopropyl ether (DIPE)	SW8260B	100	250	1100	ND		ug/Kg	04/09/18	19:14	NP	430855
1,1-Dichloroethane	SW8260B	100	240	1100	ND		ug/Kg	04/09/18	19:14	NP	430855
ETBE	SW8260B	100	250	1100	ND		ug/Kg	04/09/18	19:14	NP	430855
cis-1,2-Dichloroethene	SW8260B	100	240	1100	ND		ug/Kg	04/09/18	19:14	NP	430855
2,2-Dichloropropane	SW8260B	100	210	1100	ND		ug/Kg	04/09/18	19:14	NP	430855
Bromochloromethane	SW8260B	100	250	1100	ND		ug/Kg	04/09/18	19:14	NP	430855
Chloroform	SW8260B	100	260	1100	ND		ug/Kg	04/09/18	19:14	NP	430855
Carbon Tetrachloride	SW8260B	100	220	1100	ND		ug/Kg	04/09/18	19:14	NP	430855
1,1,1-Trichloroethane	SW8260B	100	230	1100	ND		ug/Kg	04/09/18	19:14	NP	430855
1,1-Dichloropropene	SW8260B	100	210	1100	ND		ug/Kg	04/09/18	19:14	NP	430855
Benzene	SW8260B	100	240	1100	ND		ug/Kg	04/09/18	19:14	NP	430855
TAME	SW8260B	100	240	1100	ND		ug/Kg	04/09/18	19:14	NP	430855
1,2-Dichloroethane	SW8260B	100	250	1100	ND		ug/Kg	04/09/18	19:14	NP	430855
Trichloroethylene	SW8260B	100	190	1100	ND		ug/Kg	04/09/18	19:14	NP	430855
Dibromomethane	SW8260B	100	200	1100	ND		ug/Kg	04/09/18	19:14	NP	430855
1,2-Dichloropropane	SW8260B	100	200	1100	ND		ug/Kg	04/09/18	19:14	NP	430855
Bromodichloromethane	SW8260B	100	210	1100	ND		ug/Kg	04/09/18	19:14	NP	430855
cis-1,3-Dichloropropene	SW8260B	100	170	1100	ND		ug/Kg	04/09/18	19:14	NP	430855
Toluene	SW8260B	100	200	1100	**16800**		ug/Kg	04/09/18	19:14	NP	430855
Tetrachloroethylene	SW8260B	100	180	1100	ND		ug/Kg	04/09/18	19:14	NP	430855
trans-1,3-Dichloropropene	SW8260B	100	180	1100	ND		ug/Kg	04/09/18	19:14	NP	430855
1,1,2-Trichloroethane	SW8260B	100	200	1100	ND		ug/Kg	04/09/18	19:14	NP	430855
Dibromochloromethane	SW8260B	100	200	1100	ND		ug/Kg	04/09/18	19:14	NP	430855
1,3-Dichloropropane	SW8260B	100	200	1100	ND		ug/Kg	04/09/18	19:14	NP	430855

Torrent LABORATORY, INC.

SAMPLE RESULTS

Report prepared for: Peter Langtry
Cornerstone Earth Group

Date/Time Received: 04/04/18, 4:15 pm
Date Reported: 04/09/18

Client Sample ID:	EB-22 (16-16.5)	**Lab Sample ID:**	1804039-011B
Project Name/Location:	1433-1493 El Camino Real	**Sample Matrix:**	Soil
Project Number:	958-1-5		
Date/Time Sampled:	04/04/18 / 14:08		
SDG:			

Prep Method:	5035	**Prep Batch Date/Time:**	4/9/18	9:22:00AM
Prep Batch ID:	1104109	**Prep Analyst:**	NPAR	

Parameters:	Analysis Method	DF	MDL	PQL	Results	Q	Units	Analyzed	Time	By	Analytical Batch
1,2-Dibromoethane	SW8260B	100	200	1100	ND		ug/Kg	04/09/18	19:14	NP	430855
Chlorobenzene	SW8260B	100	200	1100	ND		ug/Kg	04/09/18	19:14	NP	430855
Ethyl Benzene	SW8260B	100	180	1100	**14800**		ug/Kg	04/09/18	19:14	NP	430855
1,1,1,2-Tetrachloroethane	SW8260B	100	210	1100	ND		ug/Kg	04/09/18	19:14	NP	430855
m,p-Xylene	SW8260B	100	340	1100	**48500**		ug/Kg	04/09/18	19:14	NP	430855
o-Xylene	SW8260B	100	190	1100	**22300**		ug/Kg	04/09/18	19:14	NP	430855
Styrene	SW8260B	100	180	1100	ND		ug/Kg	04/09/18	19:14	NP	430855
Bromoform	SW8260B	100	180	1100	ND		ug/Kg	04/09/18	19:14	NP	430855
Isopropyl Benzene	SW8260B	100	170	1100	**1820**		ug/Kg	04/09/18	19:14	NP	430855
n-Propylbenzene	SW8260B	100	170	1100	**5980**		ug/Kg	04/09/18	19:14	NP	430855
Bromobenzene	SW8260B	100	190	1100	ND		ug/Kg	04/09/18	19:14	NP	430855
1,1,2,2-Tetrachloroethane	SW8260B	100	210	1100	ND		ug/Kg	04/09/18	19:14	NP	430855
2-Chlorotoluene	SW8260B	100	190	1100	ND		ug/Kg	04/09/18	19:14	NP	430855
1,3,5-Trimethylbenzene	SW8260B	100	170	1100	**7880**		ug/Kg	04/09/18	19:14	NP	430855
1,2,3-Trichloropropane	SW8260B	100	210	1100	ND		ug/Kg	04/09/18	19:14	NP	430855
4-Chlorotoluene	SW8260B	100	180	1100	ND		ug/Kg	04/09/18	19:14	NP	430855
tert-Butylbenzene	SW8260B	100	180	1100	ND		ug/Kg	04/09/18	19:14	NP	430855
1,2,4-Trimethylbenzene	SW8260B	100	150	1100	**28700**		ug/Kg	04/09/18	19:14	NP	430855
sec-Butyl Benzene	SW8260B	100	170	1100	ND		ug/Kg	04/09/18	19:14	NP	430855
p-Isopropyltoluene	SW8260B	100	160	1100	ND		ug/Kg	04/09/18	19:14	NP	430855
1,3-Dichlorobenzene	SW8260B	100	180	1100	ND		ug/Kg	04/09/18	19:14	NP	430855
1,4-Dichlorobenzene	SW8260B	100	180	1100	ND		ug/Kg	04/09/18	19:14	NP	430855
n-Butylbenzene	SW8260B	100	160	1100	**1910**		ug/Kg	04/09/18	19:14	NP	430855
1,2-Dichlorobenzene	SW8260B	100	190	1100	ND		ug/Kg	04/09/18	19:14	NP	430855
1,2-Dibromo-3-Chloropropane	SW8260B	100	200	1100	ND		ug/Kg	04/09/18	19:14	NP	430855
Hexachlorobutadiene	SW8260B	100	150	1100	ND		ug/Kg	04/09/18	19:14	NP	430855
1,2,4-Trichlorobenzene	SW8260B	100	160	1100	ND		ug/Kg	04/09/18	19:14	NP	430855
Naphthalene	SW8260B	100	180	1100	**3050**		ug/Kg	04/09/18	19:14	NP	430855
1,2,3-Trichlorobenzene	SW8260B	100	180	1100	ND		ug/Kg	04/09/18	19:14	NP	430855
2-Butanone	SW8260B	100	250	1100	**13000**		ug/Kg	04/09/18	19:14	NP	430855
(S) Dibromofluoromethane	SW8260B		59.8 - 148		**98.5**		%	04/09/18	19:14	NP	430855
(S) Toluene-d8	SW8260B		55.2 - 133		**106**		%	04/09/18	19:14	NP	430855
(S) 4-Bromofluorobenzene	SW8260B		55.8 - 141		**103**		%	04/09/18	19:14	NP	430855

Torrent LABORATORY, INC.

SAMPLE RESULTS

Report prepared for: Peter Langtry
Cornerstone Earth Group

Date/Time Received: 04/04/18, 4:15 pm
Date Reported: 04/09/18

Client Sample ID:	EB-22 (16-16.5)	**Lab Sample ID:**	1804039-011B
Project Name/Location:	1433-1493 El Camino Real	**Sample Matrix:**	Soil
Project Number:	958-1-5		
Date/Time Sampled:	04/04/18 / 14:08		
SDG:			

Prep Method:	5035GRO	**Prep Batch Date/Time:**	4/9/18	9:22:00AM
Prep Batch ID:	1104111	**Prep Analyst:**	NPAR	

Parameters:	Analysis Method	DF	MDL	PQL	Results	Q	Units	Analyzed	Time	By	Analytical Batch
TPH(Gasoline)	8260TPH	100	4700	11000	**943000**	E	ug/Kg	04/09/18	19:14	NP	430855
(S) 4-Bromofluorobenzene	8260TPH		43.9 - 127		**116**		%	04/09/18	19:14	NP	430855

NOTE: E-Estimated value.x- Sample chromatogram does not resemble gasoline standard pattern. Results elevated due to heavy end hydrocarbons (possibly aged gasoline).

Torrent LABORATORY, INC.

SAMPLE RESULTS

Report prepared for: Peter Langtry
Cornerstone Earth Group

Date/Time Received: 04/04/18, 4:15 pm
Date Reported: 04/09/18

Client Sample ID:	EB-22 (19.5-20)	**Lab Sample ID:**	1804039-012B
Project Name/Location:	1433-1493 El Camino Real	**Sample Matrix:**	Soil
Project Number:	958-1-5		
Date/Time Sampled:	04/04/18 / 14:12		
SDG:			

Prep Method:	5035	**Prep Batch Date/Time:**	4/12/18	9:24:00AM
Prep Batch ID:	1104231	**Prep Analyst:**	NPAR	

Parameters:	Analysis Method	DF	MDL	PQL	Results	Q	Units	Analyzed	Time	By	Analytical Batch
Dichlorodifluoromethane	SW8260B	1	1.5	12	ND		ug/Kg	04/12/18	16:30	NP	430971
Chloromethane	SW8260B	1	2.2	12	ND		ug/Kg	04/12/18	16:30	NP	430971
Vinyl Chloride	SW8260B	1	2.4	12	ND		ug/Kg	04/12/18	16:30	NP	430971
Bromomethane	SW8260B	1	3.2	12	ND		ug/Kg	04/12/18	16:30	NP	430971
Chloroethane	SW8260B	1	3.6	12	ND		ug/Kg	04/12/18	16:30	NP	430971
Trichlorofluoromethane	SW8260B	1	2.5	12	ND		ug/Kg	04/12/18	16:30	NP	430971
1,1-Dichloroethene	SW8260B	1	2.4	12	ND		ug/Kg	04/12/18	16:30	NP	430971
Freon 113	SW8260B	1	2.2	12	ND		ug/Kg	04/12/18	16:30	NP	430971
Methylene Chloride	SW8260B	1	8.5	12	ND		ug/Kg	04/12/18	16:30	NP	430971
trans-1,2-Dichloroethene	SW8260B	1	2.5	12	ND		ug/Kg	04/12/18	16:30	NP	430971
MTBE	SW8260B	1	2.8	12	ND		ug/Kg	04/12/18	16:30	NP	430971
tert-Butanol	SW8260B	1	14	60	ND		ug/Kg	04/12/18	16:30	NP	430971
Diisopropyl ether (DIPE)	SW8260B	1	2.7	12	ND		ug/Kg	04/12/18	16:30	NP	430971
1,1-Dichloroethane	SW8260B	1	2.6	12	ND		ug/Kg	04/12/18	16:30	NP	430971
ETBE	SW8260B	1	2.7	12	ND		ug/Kg	04/12/18	16:30	NP	430971
cis-1,2-Dichloroethene	SW8260B	1	2.7	12	ND		ug/Kg	04/12/18	16:30	NP	430971
2,2-Dichloropropane	SW8260B	1	2.3	12	ND		ug/Kg	04/12/18	16:30	NP	430971
Bromochloromethane	SW8260B	1	2.8	12	ND		ug/Kg	04/12/18	16:30	NP	430971
Chloroform	SW8260B	1	2.8	12	ND		ug/Kg	04/12/18	16:30	NP	430971
Carbon Tetrachloride	SW8260B	1	2.5	12	ND		ug/Kg	04/12/18	16:30	NP	430971
1,1,1-Trichloroethane	SW8260B	1	2.5	12	ND		ug/Kg	04/12/18	16:30	NP	430971
1,1-Dichloropropene	SW8260B	1	2.4	12	ND		ug/Kg	04/12/18	16:30	NP	430971
Benzene	SW8260B	1	2.7	12	ND		ug/Kg	04/12/18	16:30	NP	430971
TAME	SW8260B	1	2.7	12	ND		ug/Kg	04/12/18	16:30	NP	430971
1,2-Dichloroethane	SW8260B	1	2.8	12	ND		ug/Kg	04/12/18	16:30	NP	430971
Trichloroethylene	SW8260B	1	2.2	12	ND		ug/Kg	04/12/18	16:30	NP	430971
Dibromomethane	SW8260B	1	2.2	12	ND		ug/Kg	04/12/18	16:30	NP	430971
1,2-Dichloropropane	SW8260B	1	2.2	12	ND		ug/Kg	04/12/18	16:30	NP	430971
Bromodichloromethane	SW8260B	1	2.4	12	ND		ug/Kg	04/12/18	16:30	NP	430971
cis-1,3-Dichloropropene	SW8260B	1	1.9	12	ND		ug/Kg	04/12/18	16:30	NP	430971
Toluene	SW8260B	1	2.2	12	**26.2**		ug/Kg	04/12/18	16:30	NP	430971
Tetrachloroethylene	SW8260B	1	2.0	12	ND		ug/Kg	04/12/18	16:30	NP	430971
trans-1,3-Dichloropropene	SW8260B	1	2.0	12	ND		ug/Kg	04/12/18	16:30	NP	430971
1,1,2-Trichloroethane	SW8260B	1	2.2	12	ND		ug/Kg	04/12/18	16:30	NP	430971
Dibromochloromethane	SW8260B	1	2.2	12	ND		ug/Kg	04/12/18	16:30	NP	430971
1,3-Dichloropropane	SW8260B	1	2.2	12	ND		ug/Kg	04/12/18	16:30	NP	430971

Torrent LABORATORY, INC.

SAMPLE RESULTS

Report prepared for: Peter Langtry
Cornerstone Earth Group

Date/Time Received: 04/04/18, 4:15 pm
Date Reported: 04/09/18

Client Sample ID:	EB-22 (19.5-20)	**Lab Sample ID:**	1804039-012B
Project Name/Location:	1433-1493 El Camino Real	**Sample Matrix:**	Soil
Project Number:	958-1-5		
Date/Time Sampled:	04/04/18 / 14:12		
SDG:			

Prep Method:	5035	**Prep Batch Date/Time:**	4/12/18	9:24:00AM
Prep Batch ID:	1104231	**Prep Analyst:**	NPAR	

Parameters:	Analysis Method	DF	MDL	PQL	Results	Q	Units	Analyzed	Time	By	Analytical Batch
1,2-Dibromoethane	SW8260B	1	2.2	12	ND		ug/Kg	04/12/18	16:30	NP	430971
Chlorobenzene	SW8260B	1	2.2	12	ND		ug/Kg	04/12/18	16:30	NP	430971
Ethyl Benzene	SW8260B	1	2.0	12	ND		ug/Kg	04/12/18	16:30	NP	430971
1,1,1,2-Tetrachloroethane	SW8260B	1	2.3	12	ND		ug/Kg	04/12/18	16:30	NP	430971
m,p-Xylene	SW8260B	1	3.8	12	**96.3**		ug/Kg	04/12/18	16:30	NP	430971
o-Xylene	SW8260B	1	2.1	12	**37.9**		ug/Kg	04/12/18	16:30	NP	430971
Styrene	SW8260B	1	2.0	12	ND		ug/Kg	04/12/18	16:30	NP	430971
Bromoform	SW8260B	1	2.0	12	ND		ug/Kg	04/12/18	16:30	NP	430971
Isopropyl Benzene	SW8260B	1	1.9	12	**19.6**		ug/Kg	04/12/18	16:30	NP	430971
n-Propylbenzene	SW8260B	1	1.9	12	**29.0**		ug/Kg	04/12/18	16:30	NP	430971
Bromobenzene	SW8260B	1	2.1	12	ND		ug/Kg	04/12/18	16:30	NP	430971
1,1,2,2-Tetrachloroethane	SW8260B	1	2.3	12	ND		ug/Kg	04/12/18	16:30	NP	430971
2-Chlorotoluene	SW8260B	1	2.1	12	ND		ug/Kg	04/12/18	16:30	NP	430971
1,3,5-Trimethylbenzene	SW8260B	1	1.9	12	ND		ug/Kg	04/12/18	16:30	NP	430971
1,2,3-Trichloropropane	SW8260B	1	2.3	12	ND		ug/Kg	04/12/18	16:30	NP	430971
4-Chlorotoluene	SW8260B	1	2.0	12	ND		ug/Kg	04/12/18	16:30	NP	430971
tert-Butylbenzene	SW8260B	1	1.9	12	ND		ug/Kg	04/12/18	16:30	NP	430971
1,2,4-Trimethylbenzene	SW8260B	1	1.6	12	**33.0**		ug/Kg	04/12/18	16:30	NP	430971
sec-Butyl Benzene	SW8260B	1	1.9	12	ND		ug/Kg	04/12/18	16:30	NP	430971
p-Isopropyltoluene	SW8260B	1	1.7	12	ND		ug/Kg	04/12/18	16:30	NP	430971
1,3-Dichlorobenzene	SW8260B	1	2.0	12	ND		ug/Kg	04/12/18	16:30	NP	430971
1,4-Dichlorobenzene	SW8260B	1	2.0	12	ND		ug/Kg	04/12/18	16:30	NP	430971
n-Butylbenzene	SW8260B	1	1.7	12	ND		ug/Kg	04/12/18	16:30	NP	430971
1,2-Dichlorobenzene	SW8260B	1	2.1	12	ND		ug/Kg	04/12/18	16:30	NP	430971
1,2-Dibromo-3-Chloropropane	SW8260B	1	2.2	12	ND		ug/Kg	04/12/18	16:30	NP	430971
Hexachlorobutadiene	SW8260B	1	1.6	12	ND		ug/Kg	04/12/18	16:30	NP	430971
1,2,4-Trichlorobenzene	SW8260B	1	1.8	12	ND		ug/Kg	04/12/18	16:30	NP	430971
Naphthalene	SW8260B	1	2.0	12	ND		ug/Kg	04/12/18	16:30	NP	430971
1,2,3-Trichlorobenzene	SW8260B	1	2.0	12	ND		ug/Kg	04/12/18	16:30	NP	430971
2-Butanone	SW8260B	1	2.7	12	ND		ug/Kg	04/12/18	16:30	NP	430971
(S) Dibromofluoromethane	SW8260B		59.8 - 148		**112**		%	04/12/18	16:30	NP	430971
(S) Toluene-d8	SW8260B		55.2 - 133		**110**		%	04/12/18	16:30	NP	430971
(S) 4-Bromofluorobenzene	SW8260B		55.8 - 141		**115**		%	04/12/18	16:30	NP	430971

Torrent LABORATORY, INC.

SAMPLE RESULTS

Report prepared for: Peter Langtry
Cornerstone Earth Group

Date/Time Received: 04/04/18, 4:15 pm
Date Reported: 04/09/18

Client Sample ID:	EB-22 (19.5-20)	**Lab Sample ID:**	1804039-012B
Project Name/Location:	1433-1493 El Camino Real	**Sample Matrix:**	Soil
Project Number:	958-1-5		
Date/Time Sampled:	04/04/18 / 14:12		
SDG:			

Prep Method:	5035GRO	**Prep Batch Date/Time:**	4/13/18	10:24:00AM
Prep Batch ID:	1104256	**Prep Analyst:**	NPAR	

Parameters:	Analysis Method	DF	MDL	PQL	Results	Q	Units	Analyzed	Time	By	Analytical Batch
TPH(Gasoline)	8260TPH	1	53	120	**896**	x	ug/Kg	04/13/18	15:28	NP	430986
(S) 4-Bromofluorobenzene	8260TPH		43.9 - 127		**74.1**		%	04/13/18	15:28	NP	430986

NOTE: x - Does not match pattern of reference Gasoline standard. Reported value is the result of discrete peak of non-gasoline compounds within range of C5-C12 quantified as Gasoline.

Torrent LABORATORY, INC.

SAMPLE RESULTS

Report prepared for: Peter Langtry
Cornerstone Earth Group

Date/Time Received: 04/04/18, 4:15 pm
Date Reported: 04/09/18

Client Sample ID:	EB-23 (4.5-5)	**Lab Sample ID:**	1804039-013A
Project Name/Location:	1433-1493 El Camino Real	**Sample Matrix:**	Soil
Project Number:	958-1-5		
Date/Time Sampled:	04/04/18 / 14:38		
SDG:			

Prep Method:	3546_TPH	**Prep Batch Date/Time:**	4/5/18 6:00:00PM
Prep Batch ID:	1104005	**Prep Analyst:**	SNARASIMHAN

Parameters:	Analysis Method	DF	MDL	PQL	Results	Q	Units	Analyzed	Time	By	Analytical Batch
TPH as Diesel	SW8015B	1	0.85	2.0	**2.38**	x	mg/Kg	04/06/18	19:06	mk	430765
			Acceptance Limits								
Pentacosane (S)	SW8015B		59 - 129		**82.6**		%	04/06/18	19:06	mk	430765

NOTE: x-not typical of Diesel ref. std: peaks within Diesel range quantified as diesel

Torrent LABORATORY, INC.

SAMPLE RESULTS

Report prepared for: Peter Langtry
Cornerstone Earth Group

Date/Time Received: 04/04/18, 4:15 pm
Date Reported: 04/09/18

Client Sample ID:	EB-23 (4.5-5)	**Lab Sample ID:**	1804039-013B
Project Name/Location:	1433-1493 El Camino Real	**Sample Matrix:**	Soil
Project Number:	958-1-5		
Date/Time Sampled:	04/04/18 / 14:38		
SDG:			

Prep Method:	5035	**Prep Batch Date/Time:**	4/8/18	7:01:00AM
Prep Batch ID:	1104088	**Prep Analyst:**	NPAR	

Parameters:	Analysis Method	DF	MDL	PQL	Results	Q	Units	Analyzed	Time	By	Analytical Batch
Dichlorodifluoromethane	SW8260B	1	1.4	11	ND		ug/Kg	04/08/18	13:18	NP	430841
Chloromethane	SW8260B	1	2.1	11	ND		ug/Kg	04/08/18	13:18	NP	430841
Vinyl Chloride	SW8260B	1	2.3	11	ND		ug/Kg	04/08/18	13:18	NP	430841
Bromomethane	SW8260B	1	3.1	11	ND		ug/Kg	04/08/18	13:18	NP	430841
Chloroethane	SW8260B	1	3.4	11	ND		ug/Kg	04/08/18	13:18	NP	430841
Trichlorofluoromethane	SW8260B	1	2.3	11	ND		ug/Kg	04/08/18	13:18	NP	430841
1,1-Dichloroethene	SW8260B	1	2.3	11	ND		ug/Kg	04/08/18	13:18	NP	430841
Freon 113	SW8260B	1	2.1	11	ND		ug/Kg	04/08/18	13:18	NP	430841
Methylene Chloride	SW8260B	1	8.1	11	ND		ug/Kg	04/08/18	13:18	NP	430841
trans-1,2-Dichloroethene	SW8260B	1	2.4	11	ND		ug/Kg	04/08/18	13:18	NP	430841
MTBE	SW8260B	1	2.7	11	ND		ug/Kg	04/08/18	13:18	NP	430841
tert-Butanol	SW8260B	1	13	57	**87.8**		ug/Kg	04/08/18	13:18	NP	430841
Diisopropyl ether (DIPE)	SW8260B	1	2.6	11	ND		ug/Kg	04/08/18	13:18	NP	430841
1,1-Dichloroethane	SW8260B	1	2.5	11	ND		ug/Kg	04/08/18	13:18	NP	430841
ETBE	SW8260B	1	2.6	11	ND		ug/Kg	04/08/18	13:18	NP	430841
cis-1,2-Dichloroethene	SW8260B	1	2.5	11	ND		ug/Kg	04/08/18	13:18	NP	430841
2,2-Dichloropropane	SW8260B	1	2.2	11	ND		ug/Kg	04/08/18	13:18	NP	430841
Bromochloromethane	SW8260B	1	2.7	11	ND		ug/Kg	04/08/18	13:18	NP	430841
Chloroform	SW8260B	1	2.7	11	ND		ug/Kg	04/08/18	13:18	NP	430841
Carbon Tetrachloride	SW8260B	1	2.3	11	ND		ug/Kg	04/08/18	13:18	NP	430841
1,1,1-Trichloroethane	SW8260B	1	2.4	11	ND		ug/Kg	04/08/18	13:18	NP	430841
1,1-Dichloropropene	SW8260B	1	2.2	11	ND		ug/Kg	04/08/18	13:18	NP	430841
Benzene	SW8260B	1	2.5	11	ND		ug/Kg	04/08/18	13:18	NP	430841
TAME	SW8260B	1	2.6	11	ND		ug/Kg	04/08/18	13:18	NP	430841
1,2-Dichloroethane	SW8260B	1	2.6	11	ND		ug/Kg	04/08/18	13:18	NP	430841
Trichloroethylene	SW8260B	1	2.1	11	ND		ug/Kg	04/08/18	13:18	NP	430841
Dibromomethane	SW8260B	1	2.1	11	ND		ug/Kg	04/08/18	13:18	NP	430841
1,2-Dichloropropane	SW8260B	1	2.1	11	ND		ug/Kg	04/08/18	13:18	NP	430841
Bromodichloromethane	SW8260B	1	2.2	11	ND		ug/Kg	04/08/18	13:18	NP	430841
cis-1,3-Dichloropropene	SW8260B	1	1.8	11	ND		ug/Kg	04/08/18	13:18	NP	430841
Toluene	SW8260B	1	2.1	11	ND		ug/Kg	04/08/18	13:18	NP	430841
Tetrachloroethylene	SW8260B	1	1.9	11	ND		ug/Kg	04/08/18	13:18	NP	430841
trans-1,3-Dichloropropene	SW8260B	1	1.9	11	ND		ug/Kg	04/08/18	13:18	NP	430841
1,1,2-Trichloroethane	SW8260B	1	2.1	11	ND		ug/Kg	04/08/18	13:18	NP	430841
Dibromochloromethane	SW8260B	1	2.1	11	ND		ug/Kg	04/08/18	13:18	NP	430841
1,3-Dichloropropane	SW8260B	1	2.1	11	ND		ug/Kg	04/08/18	13:18	NP	430841

Torrent LABORATORY, INC.

SAMPLE RESULTS

Report prepared for: Peter Langtry
Cornerstone Earth Group

Date/Time Received: 04/04/18, 4:15 pm
Date Reported: 04/09/18

Client Sample ID:	EB-23 (4.5-5)	**Lab Sample ID:**	1804039-013B
Project Name/Location:	1433-1493 El Camino Real	**Sample Matrix:**	Soil
Project Number:	958-1-5		
Date/Time Sampled:	04/04/18 / 14:38		
SDG:			

Prep Method:	5035	**Prep Batch Date/Time:**	4/8/18	7:01:00AM
Prep Batch ID:	1104088	**Prep Analyst:**	NPAR	

Parameters:	Analysis Method	DF	MDL	PQL	Results	Q	Units	Analyzed	Time	By	Analytical Batch
1,2-Dibromoethane	SW8260B	1	2.1	11	ND		ug/Kg	04/08/18	13:18	NP	430841
Chlorobenzene	SW8260B	1	2.1	11	ND		ug/Kg	04/08/18	13:18	NP	430841
Ethyl Benzene	SW8260B	1	1.9	11	ND		ug/Kg	04/08/18	13:18	NP	430841
1,1,1,2-Tetrachloroethane	SW8260B	1	2.2	11	ND		ug/Kg	04/08/18	13:18	NP	430841
m,p-Xylene	SW8260B	1	3.6	11	ND		ug/Kg	04/08/18	13:18	NP	430841
o-Xylene	SW8260B	1	2.0	11	ND		ug/Kg	04/08/18	13:18	NP	430841
Styrene	SW8260B	1	1.9	11	ND		ug/Kg	04/08/18	13:18	NP	430841
Bromoform	SW8260B	1	1.9	11	ND		ug/Kg	04/08/18	13:18	NP	430841
Isopropyl Benzene	SW8260B	1	1.8	11	ND		ug/Kg	04/08/18	13:18	NP	430841
n-Propylbenzene	SW8260B	1	1.8	11	ND		ug/Kg	04/08/18	13:18	NP	430841
Bromobenzene	SW8260B	1	2.0	11	ND		ug/Kg	04/08/18	13:18	NP	430841
1,1,2,2-Tetrachloroethane	SW8260B	1	2.2	11	ND		ug/Kg	04/08/18	13:18	NP	430841
2-Chlorotoluene	SW8260B	1	2.0	11	ND		ug/Kg	04/08/18	13:18	NP	430841
1,3,5-Trimethylbenzene	SW8260B	1	1.8	11	ND		ug/Kg	04/08/18	13:18	NP	430841
1,2,3-Trichloropropane	SW8260B	1	2.2	11	ND		ug/Kg	04/08/18	13:18	NP	430841
4-Chlorotoluene	SW8260B	1	1.9	11	ND		ug/Kg	04/08/18	13:18	NP	430841
tert-Butylbenzene	SW8260B	1	1.8	11	ND		ug/Kg	04/08/18	13:18	NP	430841
1,2,4-Trimethylbenzene	SW8260B	1	1.5	11	ND		ug/Kg	04/08/18	13:18	NP	430841
sec-Butyl Benzene	SW8260B	1	1.8	11	ND		ug/Kg	04/08/18	13:18	NP	430841
p-Isopropyltoluene	SW8260B	1	1.7	11	ND		ug/Kg	04/08/18	13:18	NP	430841
1,3-Dichlorobenzene	SW8260B	1	1.9	11	ND		ug/Kg	04/08/18	13:18	NP	430841
1,4-Dichlorobenzene	SW8260B	1	1.9	11	ND		ug/Kg	04/08/18	13:18	NP	430841
n-Butylbenzene	SW8260B	1	1.7	11	ND		ug/Kg	04/08/18	13:18	NP	430841
1,2-Dichlorobenzene	SW8260B	1	2.0	11	ND		ug/Kg	04/08/18	13:18	NP	430841
1,2-Dibromo-3-Chloropropane	SW8260B	1	2.1	11	ND		ug/Kg	04/08/18	13:18	NP	430841
Hexachlorobutadiene	SW8260B	1	1.6	11	ND		ug/Kg	04/08/18	13:18	NP	430841
1,2,4-Trichlorobenzene	SW8260B	1	1.7	11	ND		ug/Kg	04/08/18	13:18	NP	430841
Naphthalene	SW8260B	1	1.9	11	ND		ug/Kg	04/08/18	13:18	NP	430841
1,2,3-Trichlorobenzene	SW8260B	1	1.9	11	ND		ug/Kg	04/08/18	13:18	NP	430841
2-Butanone	SW8260B	1	2.6	11	ND		ug/Kg	04/08/18	13:18	NP	430841
(S) Dibromofluoromethane	SW8260B		59.8 - 148		**106**		%	04/08/18	13:18	NP	430841
(S) Toluene-d8	SW8260B		55.2 - 133		**105**		%	04/08/18	13:18	NP	430841
(S) 4-Bromofluorobenzene	SW8260B		55.8 - 141		**118**		%	04/08/18	13:18	NP	430841

Torrent LABORATORY, INC.

SAMPLE RESULTS

Report prepared for: Peter Langtry
Cornerstone Earth Group

Date/Time Received: 04/04/18, 4:15 pm
Date Reported: 04/09/18

Client Sample ID:	EB-23 (4.5-5)	**Lab Sample ID:**	1804039-013B
Project Name/Location:	1433-1493 El Camino Real	**Sample Matrix:**	Soil
Project Number:	958-1-5		
Date/Time Sampled:	04/04/18 / 14:38		
SDG:			

Prep Method:	5035GRO	**Prep Batch Date/Time:**	4/8/18	7:01:00AM
Prep Batch ID:	1104091	**Prep Analyst:**	NPAR	

Parameters:	Analysis Method	DF	MDL	PQL	Results	Q	Units	Analyzed	Time	By	Analytical Batch
TPH(Gasoline)	8260TPH	1	49	110	ND		ug/Kg	04/08/18	13:18	NP	430841
(S) 4-Bromofluorobenzene	8260TPH		43.9 - 127		**106**		%	04/08/18	13:18	NP	430841

Torrent LABORATORY, INC.

SAMPLE RESULTS

Report prepared for: Peter Langtry
Cornerstone Earth Group

Date/Time Received: 04/04/18, 4:15 pm
Date Reported: 04/09/18

Client Sample ID:	EB-23 (9.5-10)	**Lab Sample ID:**	1804039-014A
Project Name/Location:	1433-1493 El Camino Real	**Sample Matrix:**	Soil
Project Number:	958-1-5		
Date/Time Sampled:	04/04/18 / 14:41		
SDG:			

Prep Method:	3546_TPH	**Prep Batch Date/Time:**	4/5/18 6:00:00PM
Prep Batch ID:	1104005	**Prep Analyst:**	SNARASIMHAN

Parameters:	Analysis Method	DF	MDL	PQL	Results	Q	Units	Analyzed	Time	By	Analytical Batch
TPH as Diesel	SW8015B	1	0.85	2.0	**2.88**	x	mg/Kg	04/06/18	19:29	mk	430765
			Acceptance Limits								
Pentacosane (S)	SW8015B		59 - 129		**94.9**		%	04/06/18	19:29	mk	430765

NOTE: x-not typical of Diesel ref. std: peaks within Diesel range quantified as diesel

Torrent LABORATORY, INC.

SAMPLE RESULTS

Report prepared for: Peter Langtry
Cornerstone Earth Group

Date/Time Received: 04/04/18, 4:15 pm
Date Reported: 04/09/18

Client Sample ID:	EB-23 (9.5-10)	**Lab Sample ID:**	1804039-014B
Project Name/Location:	1433-1493 El Camino Real	**Sample Matrix:**	Soil
Project Number:	958-1-5		
Date/Time Sampled:	04/04/18 / 14:41		
SDG:			

Prep Method:	5035	**Prep Batch Date/Time:**	4/7/18	8:12:00AM
Prep Batch ID:	1104078	**Prep Analyst:**	NPAR	

Parameters:	Analysis Method	DF	MDL	PQL	Results	Q	Units	Analyzed	Time	By	Analytical Batch
Dichlorodifluoromethane	SW8260B	1	1.4	11	ND		ug/Kg	04/07/18	15:57	NP	430825
Chloromethane	SW8260B	1	2.1	11	ND		ug/Kg	04/07/18	15:57	NP	430825
Vinyl Chloride	SW8260B	1	2.3	11	ND		ug/Kg	04/07/18	15:57	NP	430825
Bromomethane	SW8260B	1	3.1	11	ND		ug/Kg	04/07/18	15:57	NP	430825
Chloroethane	SW8260B	1	3.4	11	ND		ug/Kg	04/07/18	15:57	NP	430825
Trichlorofluoromethane	SW8260B	1	2.3	11	ND		ug/Kg	04/07/18	15:57	NP	430825
1,1-Dichloroethene	SW8260B	1	2.3	11	ND		ug/Kg	04/07/18	15:57	NP	430825
Freon 113	SW8260B	1	2.1	11	ND		ug/Kg	04/07/18	15:57	NP	430825
Methylene Chloride	SW8260B	1	8.1	11	ND		ug/Kg	04/07/18	15:57	NP	430825
trans-1,2-Dichloroethene	SW8260B	1	2.4	11	ND		ug/Kg	04/07/18	15:57	NP	430825
MTBE	SW8260B	1	2.7	11	ND		ug/Kg	04/07/18	15:57	NP	430825
tert-Butanol	SW8260B	1	13	57	**136**		ug/Kg	04/07/18	15:57	NP	430825
Diisopropyl ether (DIPE)	SW8260B	1	2.6	11	ND		ug/Kg	04/07/18	15:57	NP	430825
1,1-Dichloroethane	SW8260B	1	2.5	11	ND		ug/Kg	04/07/18	15:57	NP	430825
ETBE	SW8260B	1	2.6	11	ND		ug/Kg	04/07/18	15:57	NP	430825
cis-1,2-Dichloroethene	SW8260B	1	2.5	11	ND		ug/Kg	04/07/18	15:57	NP	430825
2,2-Dichloropropane	SW8260B	1	2.2	11	ND		ug/Kg	04/07/18	15:57	NP	430825
Bromochloromethane	SW8260B	1	2.7	11	ND		ug/Kg	04/07/18	15:57	NP	430825
Chloroform	SW8260B	1	2.7	11	ND		ug/Kg	04/07/18	15:57	NP	430825
Carbon Tetrachloride	SW8260B	1	2.3	11	ND		ug/Kg	04/07/18	15:57	NP	430825
1,1,1-Trichloroethane	SW8260B	1	2.4	11	ND		ug/Kg	04/07/18	15:57	NP	430825
1,1-Dichloropropene	SW8260B	1	2.2	11	ND		ug/Kg	04/07/18	15:57	NP	430825
Benzene	SW8260B	1	2.5	11	ND		ug/Kg	04/07/18	15:57	NP	430825
TAME	SW8260B	1	2.6	11	ND		ug/Kg	04/07/18	15:57	NP	430825
1,2-Dichloroethane	SW8260B	1	2.6	11	ND		ug/Kg	04/07/18	15:57	NP	430825
Trichloroethylene	SW8260B	1	2.1	11	ND		ug/Kg	04/07/18	15:57	NP	430825
Dibromomethane	SW8260B	1	2.1	11	ND		ug/Kg	04/07/18	15:57	NP	430825
1,2-Dichloropropane	SW8260B	1	2.1	11	ND		ug/Kg	04/07/18	15:57	NP	430825
Bromodichloromethane	SW8260B	1	2.2	11	ND		ug/Kg	04/07/18	15:57	NP	430825
cis-1,3-Dichloropropene	SW8260B	1	1.8	11	ND		ug/Kg	04/07/18	15:57	NP	430825
Toluene	SW8260B	1	2.1	11	ND		ug/Kg	04/07/18	15:57	NP	430825
Tetrachloroethylene	SW8260B	1	1.9	11	ND		ug/Kg	04/07/18	15:57	NP	430825
trans-1,3-Dichloropropene	SW8260B	1	1.9	11	ND		ug/Kg	04/07/18	15:57	NP	430825
1,1,2-Trichloroethane	SW8260B	1	2.1	11	ND		ug/Kg	04/07/18	15:57	NP	430825
Dibromochloromethane	SW8260B	1	2.1	11	ND		ug/Kg	04/07/18	15:57	NP	430825
1,3-Dichloropropane	SW8260B	1	2.1	11	ND		ug/Kg	04/07/18	15:57	NP	430825

Torrent LABORATORY, INC.

SAMPLE RESULTS

Report prepared for: Peter Langtry
Cornerstone Earth Group

Date/Time Received: 04/04/18, 4:15 pm
Date Reported: 04/09/18

Client Sample ID:	EB-23 (9.5-10)	**Lab Sample ID:**	1804039-014B
Project Name/Location:	1433-1493 El Camino Real	**Sample Matrix:**	Soil
Project Number:	958-1-5		
Date/Time Sampled:	04/04/18 / 14:41		
SDG:			

Prep Method:	5035	**Prep Batch Date/Time:**	4/7/18	8:12:00AM
Prep Batch ID:	1104078	**Prep Analyst:**	NPAR	

Parameters:	Analysis Method	DF	MDL	PQL	Results	Q	Units	Analyzed	Time	By	Analytical Batch
1,2-Dibromoethane	SW8260B	1	2.1	11	ND		ug/Kg	04/07/18	15:57	NP	430825
Chlorobenzene	SW8260B	1	2.1	11	ND		ug/Kg	04/07/18	15:57	NP	430825
Ethyl Benzene	SW8260B	1	1.9	11	ND		ug/Kg	04/07/18	15:57	NP	430825
1,1,1,2-Tetrachloroethane	SW8260B	1	2.2	11	ND		ug/Kg	04/07/18	15:57	NP	430825
m,p-Xylene	SW8260B	1	3.6	11	ND		ug/Kg	04/07/18	15:57	NP	430825
o-Xylene	SW8260B	1	2.0	11	ND		ug/Kg	04/07/18	15:57	NP	430825
Styrene	SW8260B	1	1.9	11	ND		ug/Kg	04/07/18	15:57	NP	430825
Bromoform	SW8260B	1	1.9	11	ND		ug/Kg	04/07/18	15:57	NP	430825
Isopropyl Benzene	SW8260B	1	1.8	11	ND		ug/Kg	04/07/18	15:57	NP	430825
n-Propylbenzene	SW8260B	1	1.8	11	ND		ug/Kg	04/07/18	15:57	NP	430825
Bromobenzene	SW8260B	1	2.0	11	ND		ug/Kg	04/07/18	15:57	NP	430825
1,1,2,2-Tetrachloroethane	SW8260B	1	2.2	11	ND		ug/Kg	04/07/18	15:57	NP	430825
2-Chlorotoluene	SW8260B	1	2.0	11	ND		ug/Kg	04/07/18	15:57	NP	430825
1,3,5-Trimethylbenzene	SW8260B	1	1.8	11	ND		ug/Kg	04/07/18	15:57	NP	430825
1,2,3-Trichloropropane	SW8260B	1	2.2	11	ND		ug/Kg	04/07/18	15:57	NP	430825
4-Chlorotoluene	SW8260B	1	1.9	11	ND		ug/Kg	04/07/18	15:57	NP	430825
tert-Butylbenzene	SW8260B	1	1.8	11	ND		ug/Kg	04/07/18	15:57	NP	430825
1,2,4-Trimethylbenzene	SW8260B	1	1.5	11	ND		ug/Kg	04/07/18	15:57	NP	430825
sec-Butyl Benzene	SW8260B	1	1.8	11	ND		ug/Kg	04/07/18	15:57	NP	430825
p-Isopropyltoluene	SW8260B	1	1.7	11	ND		ug/Kg	04/07/18	15:57	NP	430825
1,3-Dichlorobenzene	SW8260B	1	1.9	11	ND		ug/Kg	04/07/18	15:57	NP	430825
1,4-Dichlorobenzene	SW8260B	1	1.9	11	ND		ug/Kg	04/07/18	15:57	NP	430825
n-Butylbenzene	SW8260B	1	1.7	11	ND		ug/Kg	04/07/18	15:57	NP	430825
1,2-Dichlorobenzene	SW8260B	1	2.0	11	ND		ug/Kg	04/07/18	15:57	NP	430825
1,2-Dibromo-3-Chloropropane	SW8260B	1	2.1	11	ND		ug/Kg	04/07/18	15:57	NP	430825
Hexachlorobutadiene	SW8260B	1	1.6	11	ND		ug/Kg	04/07/18	15:57	NP	430825
1,2,4-Trichlorobenzene	SW8260B	1	1.7	11	ND		ug/Kg	04/07/18	15:57	NP	430825
Naphthalene	SW8260B	1	1.9	11	ND		ug/Kg	04/07/18	15:57	NP	430825
1,2,3-Trichlorobenzene	SW8260B	1	1.9	11	ND		ug/Kg	04/07/18	15:57	NP	430825
2-Butanone	SW8260B	1	2.6	11	ND		ug/Kg	04/07/18	15:57	NP	430825
(S) Dibromofluoromethane	SW8260B		59.8 - 148		**110**		%	04/07/18	15:57	NP	430825
(S) Toluene-d8	SW8260B		55.2 - 133		**111**		%	04/07/18	15:57	NP	430825
(S) 4-Bromofluorobenzene	SW8260B		55.8 - 141		**122**		%	04/07/18	15:57	NP	430825

Torrent LABORATORY, INC.

SAMPLE RESULTS

Report prepared for: Peter Langtry
Cornerstone Earth Group

Date/Time Received: 04/04/18, 4:15 pm
Date Reported: 04/09/18

Client Sample ID:	EB-23 (9.5-10)	**Lab Sample ID:**	1804039-014B
Project Name/Location:	1433-1493 El Camino Real	**Sample Matrix:**	Soil
Project Number:	958-1-5		
Date/Time Sampled:	04/04/18 / 14:41		
SDG:			

Prep Method:	5035GRO	**Prep Batch Date/Time:**	4/7/18	8:12:00AM
Prep Batch ID:	1104079	**Prep Analyst:**	NPAR	

Parameters:	Analysis Method	DF	MDL	PQL	Results	Q	Units	Analyzed	Time	By	Analytical Batch
TPH(Gasoline)	8260TPH	1	49	110	ND		ug/Kg	04/07/18	15:57	NP	430825
(S) 4-Bromofluorobenzene	8260TPH		43.9 - 127		**98.1**		%	04/07/18	15:57	NP	430825

Torrent LABORATORY, INC.

SAMPLE RESULTS

Report prepared for: Peter Langtry
Cornerstone Earth Group

Date/Time Received: 04/04/18, 4:15 pm
Date Reported: 04/09/18

Client Sample ID:	EB-23 (14.5-15)	**Lab Sample ID:**	1804039-015A
Project Name/Location:	1433-1493 El Camino Real	**Sample Matrix:**	Soil
Project Number:	958-1-5		
Date/Time Sampled:	04/04/18 / 14:45		
SDG:			

Prep Method:	3546_TPH	**Prep Batch Date/Time:**	4/5/18 6:00:00PM
Prep Batch ID:	1104005	**Prep Analyst:**	SNARASIMHAN

Parameters:	Analysis Method	DF	MDL	PQL	Results	Q	Units	Analyzed	Time	By	Analytical Batch
TPH as Diesel	SW8015B	1	0.85	2.0	**2.46**	x	mg/Kg	04/06/18	19:53	mk	430765
			Acceptance Limits								
Pentacosane (S)	SW8015B		59 - 129		**88.9**		%	04/06/18	19:53	mk	430765

NOTE: x-not typical of Diesel ref. std: peaks within Diesel range quantified as diesel

Torrent LABORATORY, INC.

SAMPLE RESULTS

Report prepared for: Peter Langtry
Cornerstone Earth Group

Date/Time Received: 04/04/18, 4:15 pm
Date Reported: 04/09/18

Client Sample ID:	EB-23 (14.5-15)	**Lab Sample ID:**	1804039-015B
Project Name/Location:	1433-1493 El Camino Real	**Sample Matrix:**	Soil
Project Number:	958-1-5		
Date/Time Sampled:	04/04/18 / 14:45		
SDG:			

Prep Method:	5035	**Prep Batch Date/Time:**	4/7/18	8:12:00AM
Prep Batch ID:	1104078	**Prep Analyst:**	NPAR	

Parameters:	Analysis Method	DF	MDL	PQL	Results	Q	Units	Analyzed	Time	By	Analytical Batch
Dichlorodifluoromethane	SW8260B	1	1.1	9.0	ND		ug/Kg	04/07/18	16:32	NP	430825
Chloromethane	SW8260B	1	1.6	9.0	ND		ug/Kg	04/07/18	16:32	NP	430825
Vinyl Chloride	SW8260B	1	1.8	9.0	ND		ug/Kg	04/07/18	16:32	NP	430825
Bromomethane	SW8260B	1	2.4	9.0	ND		ug/Kg	04/07/18	16:32	NP	430825
Chloroethane	SW8260B	1	2.7	9.0	ND		ug/Kg	04/07/18	16:32	NP	430825
Trichlorofluoromethane	SW8260B	1	1.9	9.0	ND		ug/Kg	04/07/18	16:32	NP	430825
1,1-Dichloroethene	SW8260B	1	1.8	9.0	ND		ug/Kg	04/07/18	16:32	NP	430825
Freon 113	SW8260B	1	1.7	9.0	ND		ug/Kg	04/07/18	16:32	NP	430825
Methylene Chloride	SW8260B	1	6.4	9.0	ND		ug/Kg	04/07/18	16:32	NP	430825
trans-1,2-Dichloroethene	SW8260B	1	1.9	9.0	ND		ug/Kg	04/07/18	16:32	NP	430825
MTBE	SW8260B	1	2.1	9.0	ND		ug/Kg	04/07/18	16:32	NP	430825
tert-Butanol	SW8260B	1	10	45	**90.0**		ug/Kg	04/07/18	16:32	NP	430825
Diisopropyl ether (DIPE)	SW8260B	1	2.1	9.0	ND		ug/Kg	04/07/18	16:32	NP	430825
1,1-Dichloroethane	SW8260B	1	2.0	9.0	ND		ug/Kg	04/07/18	16:32	NP	430825
ETBE	SW8260B	1	2.1	9.0	ND		ug/Kg	04/07/18	16:32	NP	430825
cis-1,2-Dichloroethene	SW8260B	1	2.0	9.0	ND		ug/Kg	04/07/18	16:32	NP	430825
2,2-Dichloropropane	SW8260B	1	1.7	9.0	ND		ug/Kg	04/07/18	16:32	NP	430825
Bromochloromethane	SW8260B	1	2.1	9.0	ND		ug/Kg	04/07/18	16:32	NP	430825
Chloroform	SW8260B	1	2.1	9.0	ND		ug/Kg	04/07/18	16:32	NP	430825
Carbon Tetrachloride	SW8260B	1	1.9	9.0	ND		ug/Kg	04/07/18	16:32	NP	430825
1,1,1-Trichloroethane	SW8260B	1	1.9	9.0	ND		ug/Kg	04/07/18	16:32	NP	430825
1,1-Dichloropropene	SW8260B	1	1.8	9.0	ND		ug/Kg	04/07/18	16:32	NP	430825
Benzene	SW8260B	1	2.0	9.0	ND		ug/Kg	04/07/18	16:32	NP	430825
TAME	SW8260B	1	2.0	9.0	ND		ug/Kg	04/07/18	16:32	NP	430825
1,2-Dichloroethane	SW8260B	1	2.1	9.0	ND		ug/Kg	04/07/18	16:32	NP	430825
Trichloroethylene	SW8260B	1	1.6	9.0	ND		ug/Kg	04/07/18	16:32	NP	430825
Dibromomethane	SW8260B	1	1.7	9.0	ND		ug/Kg	04/07/18	16:32	NP	430825
1,2-Dichloropropane	SW8260B	1	1.7	9.0	ND		ug/Kg	04/07/18	16:32	NP	430825
Bromodichloromethane	SW8260B	1	1.8	9.0	ND		ug/Kg	04/07/18	16:32	NP	430825
cis-1,3-Dichloropropene	SW8260B	1	1.4	9.0	ND		ug/Kg	04/07/18	16:32	NP	430825
Toluene	SW8260B	1	1.6	9.0	ND		ug/Kg	04/07/18	16:32	NP	430825
Tetrachloroethylene	SW8260B	1	1.5	9.0	ND		ug/Kg	04/07/18	16:32	NP	430825
trans-1,3-Dichloropropene	SW8260B	1	1.5	9.0	ND		ug/Kg	04/07/18	16:32	NP	430825
1,1,2-Trichloroethane	SW8260B	1	1.7	9.0	ND		ug/Kg	04/07/18	16:32	NP	430825
Dibromochloromethane	SW8260B	1	1.7	9.0	ND		ug/Kg	04/07/18	16:32	NP	430825
1,3-Dichloropropane	SW8260B	1	1.7	9.0	ND		ug/Kg	04/07/18	16:32	NP	430825

Torrent LABORATORY, INC.

SAMPLE RESULTS

Report prepared for: Peter Langtry
Cornerstone Earth Group

Date/Time Received: 04/04/18, 4:15 pm
Date Reported: 04/09/18

Client Sample ID:	EB-23 (14.5-15)	**Lab Sample ID:**	1804039-015B
Project Name/Location:	1433-1493 El Camino Real	**Sample Matrix:**	Soil
Project Number:	958-1-5		
Date/Time Sampled:	04/04/18 / 14:45		
SDG:			

Prep Method:	5035	**Prep Batch Date/Time:**	4/7/18	8:12:00AM
Prep Batch ID:	1104078	**Prep Analyst:**	NPAR	

Parameters:	Analysis Method	DF	MDL	PQL	Results	Q	Units	Analyzed	Time	By	Analytical Batch
1,2-Dibromoethane	SW8260B	1	1.6	9.0	ND		ug/Kg	04/07/18	16:32	NP	430825
Chlorobenzene	SW8260B	1	1.6	9.0	ND		ug/Kg	04/07/18	16:32	NP	430825
Ethyl Benzene	SW8260B	1	1.5	9.0	ND		ug/Kg	04/07/18	16:32	NP	430825
1,1,1,2-Tetrachloroethane	SW8260B	1	1.7	9.0	ND		ug/Kg	04/07/18	16:32	NP	430825
m,p-Xylene	SW8260B	1	2.8	9.0	ND		ug/Kg	04/07/18	16:32	NP	430825
o-Xylene	SW8260B	1	1.6	9.0	ND		ug/Kg	04/07/18	16:32	NP	430825
Styrene	SW8260B	1	1.5	9.0	ND		ug/Kg	04/07/18	16:32	NP	430825
Bromoform	SW8260B	1	1.5	9.0	ND		ug/Kg	04/07/18	16:32	NP	430825
Isopropyl Benzene	SW8260B	1	1.5	9.0	ND		ug/Kg	04/07/18	16:32	NP	430825
n-Propylbenzene	SW8260B	1	1.4	9.0	ND		ug/Kg	04/07/18	16:32	NP	430825
Bromobenzene	SW8260B	1	1.6	9.0	ND		ug/Kg	04/07/18	16:32	NP	430825
1,1,2,2-Tetrachloroethane	SW8260B	1	1.7	9.0	ND		ug/Kg	04/07/18	16:32	NP	430825
2-Chlorotoluene	SW8260B	1	1.6	9.0	ND		ug/Kg	04/07/18	16:32	NP	430825
1,3,5-Trimethylbenzene	SW8260B	1	1.4	9.0	ND		ug/Kg	04/07/18	16:32	NP	430825
1,2,3-Trichloropropane	SW8260B	1	1.7	9.0	ND		ug/Kg	04/07/18	16:32	NP	430825
4-Chlorotoluene	SW8260B	1	1.5	9.0	ND		ug/Kg	04/07/18	16:32	NP	430825
tert-Butylbenzene	SW8260B	1	1.5	9.0	ND		ug/Kg	04/07/18	16:32	NP	430825
1,2,4-Trimethylbenzene	SW8260B	1	1.2	9.0	ND		ug/Kg	04/07/18	16:32	NP	430825
sec-Butyl Benzene	SW8260B	1	1.4	9.0	ND		ug/Kg	04/07/18	16:32	NP	430825
p-Isopropyltoluene	SW8260B	1	1.3	9.0	ND		ug/Kg	04/07/18	16:32	NP	430825
1,3-Dichlorobenzene	SW8260B	1	1.5	9.0	ND		ug/Kg	04/07/18	16:32	NP	430825
1,4-Dichlorobenzene	SW8260B	1	1.5	9.0	ND		ug/Kg	04/07/18	16:32	NP	430825
n-Butylbenzene	SW8260B	1	1.3	9.0	ND		ug/Kg	04/07/18	16:32	NP	430825
1,2-Dichlorobenzene	SW8260B	1	1.6	9.0	ND		ug/Kg	04/07/18	16:32	NP	430825
1,2-Dibromo-3-Chloropropane	SW8260B	1	1.7	9.0	ND		ug/Kg	04/07/18	16:32	NP	430825
Hexachlorobutadiene	SW8260B	1	1.2	9.0	ND		ug/Kg	04/07/18	16:32	NP	430825
1,2,4-Trichlorobenzene	SW8260B	1	1.3	9.0	ND		ug/Kg	04/07/18	16:32	NP	430825
Naphthalene	SW8260B	1	1.5	9.0	ND		ug/Kg	04/07/18	16:32	NP	430825
1,2,3-Trichlorobenzene	SW8260B	1	1.5	9.0	ND		ug/Kg	04/07/18	16:32	NP	430825
2-Butanone	SW8260B	1	2.1	9.0	ND		ug/Kg	04/07/18	16:32	NP	430825
(S) Dibromofluoromethane	SW8260B		59.8 - 148		**119**		%	04/07/18	16:32	NP	430825
(S) Toluene-d8	SW8260B		55.2 - 133		**112**		%	04/07/18	16:32	NP	430825
(S) 4-Bromofluorobenzene	SW8260B		55.8 - 141		**126**		%	04/07/18	16:32	NP	430825

Torrent LABORATORY, INC.

SAMPLE RESULTS

Report prepared for: Peter Langtry
Cornerstone Earth Group

Date/Time Received: 04/04/18, 4:15 pm
Date Reported: 04/09/18

Client Sample ID:	EB-23 (14.5-15)	**Lab Sample ID:**	1804039-015B
Project Name/Location:	1433-1493 El Camino Real	**Sample Matrix:**	Soil
Project Number:	958-1-5		
Date/Time Sampled:	04/04/18 / 14:45		
SDG:			

Prep Method:	5035GRO	**Prep Batch Date/Time:**	4/7/18	8:12:00AM
Prep Batch ID:	1104079	**Prep Analyst:**	NPAR	

Parameters:	Analysis Method	DF	MDL	PQL	Results	Q	Units	Analyzed	Time	By	Analytical Batch
TPH(Gasoline)	8260TPH	1	39	90	ND		ug/Kg	04/07/18	16:32	NP	430825
(S) 4-Bromofluorobenzene	8260TPH		43.9 - 127		**84.3**		%	04/07/18	16:32	NP	430825

Torrent LABORATORY, INC.

SAMPLE RESULTS

Report prepared for: Peter Langtry
Cornerstone Earth Group

Date/Time Received: 04/04/18, 4:15 pm
Date Reported: 04/09/18

Client Sample ID:	EB-21 (4.5-5)	**Lab Sample ID:**	1804039-017A
Project Name/Location:	1433-1493 El Camino Real	**Sample Matrix:**	Soil
Project Number:	958-1-5		
Date/Time Sampled:	04/04/18 / 15:06		
SDG:			

Prep Method:	3546_TPH	**Prep Batch Date/Time:**	4/5/18 6:00:00PM
Prep Batch ID:	1104005	**Prep Analyst:**	SNARASIMHAN

Parameters:	Analysis Method	DF	MDL	PQL	Results	Q	Units	Analyzed	Time	By	Analytical Batch
TPH as Diesel	SW8015B	1	0.85	2.0	**4.38**	x	mg/Kg	04/06/18	20:16	mk	430765
			Acceptance Limits								
Pentacosane (S)	SW8015B		59 - 129		**85.8**		%	04/06/18	20:16	mk	430765

NOTE: x-not typical of Diesel ref. std: peaks within Diesel range quantified as diesel

Torrent LABORATORY, INC.

SAMPLE RESULTS

Report prepared for: Peter Langtry
Cornerstone Earth Group

Date/Time Received: 04/04/18, 4:15 pm
Date Reported: 04/09/18

Client Sample ID:	EB-21 (4.5-5)	**Lab Sample ID:**	1804039-017B
Project Name/Location:	1433-1493 El Camino Real	**Sample Matrix:**	Soil
Project Number:	958-1-5		
Date/Time Sampled:	04/04/18 / 15:06		
SDG:			

Prep Method:	5035	**Prep Batch Date/Time:**	4/7/18	8:12:00AM
Prep Batch ID:	1104078	**Prep Analyst:**	NPAR	

Parameters:	Analysis Method	DF	MDL	PQL	Results	Q	Units	Analyzed	Time	By	Analytical Batch
Dichlorodifluoromethane	SW8260B	1	1.5	13	ND		ug/Kg	04/07/18	17:08	NP	430825
Chloromethane	SW8260B	1	2.3	13	ND		ug/Kg	04/07/18	17:08	NP	430825
Vinyl Chloride	SW8260B	1	2.6	13	ND		ug/Kg	04/07/18	17:08	NP	430825
Bromomethane	SW8260B	1	3.4	13	ND		ug/Kg	04/07/18	17:08	NP	430825
Chloroethane	SW8260B	1	3.8	13	ND		ug/Kg	04/07/18	17:08	NP	430825
Trichlorofluoromethane	SW8260B	1	2.6	13	ND		ug/Kg	04/07/18	17:08	NP	430825
1,1-Dichloroethene	SW8260B	1	2.5	13	ND		ug/Kg	04/07/18	17:08	NP	430825
Freon 113	SW8260B	1	2.3	13	ND		ug/Kg	04/07/18	17:08	NP	430825
Methylene Chloride	SW8260B	1	8.9	13	ND		ug/Kg	04/07/18	17:08	NP	430825
trans-1,2-Dichloroethene	SW8260B	1	2.6	13	ND		ug/Kg	04/07/18	17:08	NP	430825
MTBE	SW8260B	1	2.9	13	ND		ug/Kg	04/07/18	17:08	NP	430825
tert-Butanol	SW8260B	1	14	63	ND		ug/Kg	04/07/18	17:08	NP	430825
Diisopropyl ether (DIPE)	SW8260B	1	2.9	13	ND		ug/Kg	04/07/18	17:08	NP	430825
1,1-Dichloroethane	SW8260B	1	2.8	13	ND		ug/Kg	04/07/18	17:08	NP	430825
ETBE	SW8260B	1	2.9	13	ND		ug/Kg	04/07/18	17:08	NP	430825
cis-1,2-Dichloroethene	SW8260B	1	2.8	13	ND		ug/Kg	04/07/18	17:08	NP	430825
2,2-Dichloropropane	SW8260B	1	2.4	13	ND		ug/Kg	04/07/18	17:08	NP	430825
Bromochloromethane	SW8260B	1	2.9	13	ND		ug/Kg	04/07/18	17:08	NP	430825
Chloroform	SW8260B	1	3.0	13	ND		ug/Kg	04/07/18	17:08	NP	430825
Carbon Tetrachloride	SW8260B	1	2.6	13	ND		ug/Kg	04/07/18	17:08	NP	430825
1,1,1-Trichloroethane	SW8260B	1	2.6	13	ND		ug/Kg	04/07/18	17:08	NP	430825
1,1-Dichloropropene	SW8260B	1	2.5	13	ND		ug/Kg	04/07/18	17:08	NP	430825
Benzene	SW8260B	1	2.8	13	ND		ug/Kg	04/07/18	17:08	NP	430825
TAME	SW8260B	1	2.8	13	ND		ug/Kg	04/07/18	17:08	NP	430825
1,2-Dichloroethane	SW8260B	1	2.9	13	ND		ug/Kg	04/07/18	17:08	NP	430825
Trichloroethylene	SW8260B	1	2.3	13	ND		ug/Kg	04/07/18	17:08	NP	430825
Dibromomethane	SW8260B	1	2.3	13	ND		ug/Kg	04/07/18	17:08	NP	430825
1,2-Dichloropropane	SW8260B	1	2.3	13	ND		ug/Kg	04/07/18	17:08	NP	430825
Bromodichloromethane	SW8260B	1	2.5	13	ND		ug/Kg	04/07/18	17:08	NP	430825
cis-1,3-Dichloropropene	SW8260B	1	2.0	13	ND		ug/Kg	04/07/18	17:08	NP	430825
Toluene	SW8260B	1	2.3	13	ND		ug/Kg	04/07/18	17:08	NP	430825
Tetrachloroethylene	SW8260B	1	2.1	13	ND		ug/Kg	04/07/18	17:08	NP	430825
trans-1,3-Dichloropropene	SW8260B	1	2.1	13	ND		ug/Kg	04/07/18	17:08	NP	430825
1,1,2-Trichloroethane	SW8260B	1	2.3	13	ND		ug/Kg	04/07/18	17:08	NP	430825
Dibromochloromethane	SW8260B	1	2.3	13	ND		ug/Kg	04/07/18	17:08	NP	430825
1,3-Dichloropropane	SW8260B	1	2.3	13	ND		ug/Kg	04/07/18	17:08	NP	430825

Torrent LABORATORY, INC.

SAMPLE RESULTS

Report prepared for: Peter Langtry
Cornerstone Earth Group

Date/Time Received: 04/04/18, 4:15 pm
Date Reported: 04/09/18

Client Sample ID:	EB-21 (4.5-5)	**Lab Sample ID:**	1804039-017B
Project Name/Location:	1433-1493 El Camino Real	**Sample Matrix:**	Soil
Project Number:	958-1-5		
Date/Time Sampled:	04/04/18 / 15:06		
SDG:			

Prep Method:	5035	**Prep Batch Date/Time:**	4/7/18	8:12:00AM
Prep Batch ID:	1104078	**Prep Analyst:**	NPAR	

Parameters:	Analysis Method	DF	MDL	PQL	Results	Q	Units	Analyzed	Time	By	Analytical Batch
1,2-Dibromoethane	SW8260B	1	2.3	13	ND		ug/Kg	04/07/18	17:08	NP	430825
Chlorobenzene	SW8260B	1	2.3	13	ND		ug/Kg	04/07/18	17:08	NP	430825
Ethyl Benzene	SW8260B	1	2.1	13	ND		ug/Kg	04/07/18	17:08	NP	430825
1,1,1,2-Tetrachloroethane	SW8260B	1	2.4	13	ND		ug/Kg	04/07/18	17:08	NP	430825
m,p-Xylene	SW8260B	1	3.9	13	ND		ug/Kg	04/07/18	17:08	NP	430825
o-Xylene	SW8260B	1	2.2	13	ND		ug/Kg	04/07/18	17:08	NP	430825
Styrene	SW8260B	1	2.1	13	ND		ug/Kg	04/07/18	17:08	NP	430825
Bromoform	SW8260B	1	2.1	13	ND		ug/Kg	04/07/18	17:08	NP	430825
Isopropyl Benzene	SW8260B	1	2.0	13	ND		ug/Kg	04/07/18	17:08	NP	430825
n-Propylbenzene	SW8260B	1	2.0	13	ND		ug/Kg	04/07/18	17:08	NP	430825
Bromobenzene	SW8260B	1	2.2	13	ND		ug/Kg	04/07/18	17:08	NP	430825
1,1,2,2-Tetrachloroethane	SW8260B	1	2.4	13	ND		ug/Kg	04/07/18	17:08	NP	430825
2-Chlorotoluene	SW8260B	1	2.2	13	ND		ug/Kg	04/07/18	17:08	NP	430825
1,3,5-Trimethylbenzene	SW8260B	1	2.0	13	ND		ug/Kg	04/07/18	17:08	NP	430825
1,2,3-Trichloropropane	SW8260B	1	2.4	13	ND		ug/Kg	04/07/18	17:08	NP	430825
4-Chlorotoluene	SW8260B	1	2.1	13	ND		ug/Kg	04/07/18	17:08	NP	430825
tert-Butylbenzene	SW8260B	1	2.0	13	ND		ug/Kg	04/07/18	17:08	NP	430825
1,2,4-Trimethylbenzene	SW8260B	1	1.7	13	ND		ug/Kg	04/07/18	17:08	NP	430825
sec-Butyl Benzene	SW8260B	1	1.9	13	ND		ug/Kg	04/07/18	17:08	NP	430825
p-Isopropyltoluene	SW8260B	1	1.8	13	ND		ug/Kg	04/07/18	17:08	NP	430825
1,3-Dichlorobenzene	SW8260B	1	2.1	13	ND		ug/Kg	04/07/18	17:08	NP	430825
1,4-Dichlorobenzene	SW8260B	1	2.1	13	ND		ug/Kg	04/07/18	17:08	NP	430825
n-Butylbenzene	SW8260B	1	1.8	13	ND		ug/Kg	04/07/18	17:08	NP	430825
1,2-Dichlorobenzene	SW8260B	1	2.2	13	ND		ug/Kg	04/07/18	17:08	NP	430825
1,2-Dibromo-3-Chloropropane	SW8260B	1	2.3	13	ND		ug/Kg	04/07/18	17:08	NP	430825
Hexachlorobutadiene	SW8260B	1	1.7	13	ND		ug/Kg	04/07/18	17:08	NP	430825
1,2,4-Trichlorobenzene	SW8260B	1	1.8	13	ND		ug/Kg	04/07/18	17:08	NP	430825
Naphthalene	SW8260B	1	2.1	13	ND		ug/Kg	04/07/18	17:08	NP	430825
1,2,3-Trichlorobenzene	SW8260B	1	2.1	13	ND		ug/Kg	04/07/18	17:08	NP	430825
2-Butanone	SW8260B	1	2.9	13	ND		ug/Kg	04/07/18	17:08	NP	430825
(S) Dibromofluoromethane	SW8260B		59.8 - 148		**106**		%	04/07/18	17:08	NP	430825
(S) Toluene-d8	SW8260B		55.2 - 133		**111**		%	04/07/18	17:08	NP	430825
(S) 4-Bromofluorobenzene	SW8260B		55.8 - 141		**124**		%	04/07/18	17:08	NP	430825

Torrent LABORATORY, INC.

SAMPLE RESULTS

Report prepared for: Peter Langtry
Cornerstone Earth Group

Date/Time Received: 04/04/18, 4:15 pm
Date Reported: 04/09/18

Client Sample ID:	EB-21 (4.5-5)	**Lab Sample ID:**	1804039-017B
Project Name/Location:	1433-1493 El Camino Real	**Sample Matrix:**	Soil
Project Number:	958-1-5		
Date/Time Sampled:	04/04/18 / 15:06		
SDG:			

Prep Method:	5035GRO	**Prep Batch Date/Time:**	4/7/18	8:12:00AM
Prep Batch ID:	1104079	**Prep Analyst:**	NPAR	

Parameters:	Analysis Method	DF	MDL	PQL	Results	Q	Units	Analyzed	Time	By	Analytical Batch
TPH(Gasoline)	8260TPH	1	54	130	ND		ug/Kg	04/07/18	17:08	NP	430825
(S) 4-Bromofluorobenzene	8260TPH		43.9 - 127		**111**		%	04/07/18	17:08	NP	430825

Torrent LABORATORY, INC.

SAMPLE RESULTS

Report prepared for: Peter Langtry
Cornerstone Earth Group

Date/Time Received: 04/04/18, 4:15 pm
Date Reported: 04/09/18

Client Sample ID:	EB-21 (9.5-10)	**Lab Sample ID:**	1804039-018A
Project Name/Location:	1433-1493 El Camino Real	**Sample Matrix:**	Soil
Project Number:	958-1-5		
Date/Time Sampled:	04/04/18 / 15:10		
SDG:			

Prep Method:	3546_TPH	**Prep Batch Date/Time:**	4/5/18 6:00:00PM
Prep Batch ID:	1104005	**Prep Analyst:**	SNARASIMHAN

Parameters:	Analysis Method	DF	MDL	PQL	Results	Q	Units	Analyzed	Time	By	Analytical Batch
TPH as Diesel	SW8015B	1	0.85	2.0	**2.15**	x	mg/Kg	04/06/18	20:40	mk	430765
			Acceptance Limits								
Pentacosane (S)	SW8015B		59 - 129		**85.1**		%	04/06/18	20:40	mk	430765

NOTE: x-not typical of Diesel ref. std: peaks within Diesel range quantified as diesel

Torrent LABORATORY, INC.

SAMPLE RESULTS

Report prepared for: Peter Langtry
Cornerstone Earth Group

Date/Time Received: 04/04/18, 4:15 pm
Date Reported: 04/09/18

Client Sample ID:	EB-21 (9.5-10)	**Lab Sample ID:**	1804039-018B
Project Name/Location:	1433-1493 El Camino Real	**Sample Matrix:**	Soil
Project Number:	958-1-5		
Date/Time Sampled:	04/04/18 / 15:10		
SDG:			

Prep Method:	5035	**Prep Batch Date/Time:**	4/7/18	8:12:00AM
Prep Batch ID:	1104078	**Prep Analyst:**	NPAR	

Parameters:	Analysis Method	DF	MDL	PQL	Results	Q	Units	Analyzed	Time	By	Analytical Batch
Dichlorodifluoromethane	SW8260B	1	1.7	14	ND		ug/Kg	04/07/18	17:44	NP	430825
Chloromethane	SW8260B	1	2.5	14	ND		ug/Kg	04/07/18	17:44	NP	430825
Vinyl Chloride	SW8260B	1	2.8	14	ND		ug/Kg	04/07/18	17:44	NP	430825
Bromomethane	SW8260B	1	3.6	14	ND		ug/Kg	04/07/18	17:44	NP	430825
Chloroethane	SW8260B	1	4.1	14	ND		ug/Kg	04/07/18	17:44	NP	430825
Trichlorofluoromethane	SW8260B	1	2.8	14	ND		ug/Kg	04/07/18	17:44	NP	430825
1,1-Dichloroethene	SW8260B	1	2.7	14	ND		ug/Kg	04/07/18	17:44	NP	430825
Freon 113	SW8260B	1	2.5	14	ND		ug/Kg	04/07/18	17:44	NP	430825
Methylene Chloride	SW8260B	1	9.6	14	ND		ug/Kg	04/07/18	17:44	NP	430825
trans-1,2-Dichloroethene	SW8260B	1	2.8	14	ND		ug/Kg	04/07/18	17:44	NP	430825
MTBE	SW8260B	1	3.2	14	ND		ug/Kg	04/07/18	17:44	NP	430825
tert-Butanol	SW8260B	1	16	68	ND		ug/Kg	04/07/18	17:44	NP	430825
Diisopropyl ether (DIPE)	SW8260B	1	3.1	14	ND		ug/Kg	04/07/18	17:44	NP	430825
1,1-Dichloroethane	SW8260B	1	3.0	14	ND		ug/Kg	04/07/18	17:44	NP	430825
ETBE	SW8260B	1	3.1	14	ND		ug/Kg	04/07/18	17:44	NP	430825
cis-1,2-Dichloroethene	SW8260B	1	3.0	14	ND		ug/Kg	04/07/18	17:44	NP	430825
2,2-Dichloropropane	SW8260B	1	2.6	14	ND		ug/Kg	04/07/18	17:44	NP	430825
Bromochloromethane	SW8260B	1	3.2	14	ND		ug/Kg	04/07/18	17:44	NP	430825
Chloroform	SW8260B	1	3.2	14	ND		ug/Kg	04/07/18	17:44	NP	430825
Carbon Tetrachloride	SW8260B	1	2.8	14	ND		ug/Kg	04/07/18	17:44	NP	430825
1,1,1-Trichloroethane	SW8260B	1	2.8	14	ND		ug/Kg	04/07/18	17:44	NP	430825
1,1-Dichloropropene	SW8260B	1	2.7	14	ND		ug/Kg	04/07/18	17:44	NP	430825
Benzene	SW8260B	1	3.0	14	ND		ug/Kg	04/07/18	17:44	NP	430825
TAME	SW8260B	1	3.1	14	ND		ug/Kg	04/07/18	17:44	NP	430825
1,2-Dichloroethane	SW8260B	1	3.1	14	ND		ug/Kg	04/07/18	17:44	NP	430825
Trichloroethylene	SW8260B	1	2.4	14	ND		ug/Kg	04/07/18	17:44	NP	430825
Dibromomethane	SW8260B	1	2.5	14	ND		ug/Kg	04/07/18	17:44	NP	430825
1,2-Dichloropropane	SW8260B	1	2.5	14	ND		ug/Kg	04/07/18	17:44	NP	430825
Bromodichloromethane	SW8260B	1	2.7	14	ND		ug/Kg	04/07/18	17:44	NP	430825
cis-1,3-Dichloropropene	SW8260B	1	2.2	14	ND		ug/Kg	04/07/18	17:44	NP	430825
Toluene	SW8260B	1	2.5	14	ND		ug/Kg	04/07/18	17:44	NP	430825
Tetrachloroethylene	SW8260B	1	2.2	14	ND		ug/Kg	04/07/18	17:44	NP	430825
trans-1,3-Dichloropropene	SW8260B	1	2.2	14	ND		ug/Kg	04/07/18	17:44	NP	430825
1,1,2-Trichloroethane	SW8260B	1	2.5	14	ND		ug/Kg	04/07/18	17:44	NP	430825
Dibromochloromethane	SW8260B	1	2.5	14	ND		ug/Kg	04/07/18	17:44	NP	430825
1,3-Dichloropropane	SW8260B	1	2.5	14	ND		ug/Kg	04/07/18	17:44	NP	430825

Torrent LABORATORY, INC.

SAMPLE RESULTS

Report prepared for: Peter Langtry
Cornerstone Earth Group

Date/Time Received: 04/04/18, 4:15 pm
Date Reported: 04/09/18

Client Sample ID:	EB-21 (9.5-10)	**Lab Sample ID:**	1804039-018B
Project Name/Location:	1433-1493 El Camino Real	**Sample Matrix:**	Soil
Project Number:	958-1-5		
Date/Time Sampled:	04/04/18 / 15:10		
SDG:			

Prep Method:	5035	**Prep Batch Date/Time:**	4/7/18	8:12:00AM
Prep Batch ID:	1104078	**Prep Analyst:**	NPAR	

Parameters:	Analysis Method	DF	MDL	PQL	Results	Q	Units	Analyzed	Time	By	Analytical Batch
1,2-Dibromoethane	SW8260B	1	2.4	14	ND		ug/Kg	04/07/18	17:44	NP	430825
Chlorobenzene	SW8260B	1	2.5	14	ND		ug/Kg	04/07/18	17:44	NP	430825
Ethyl Benzene	SW8260B	1	2.2	14	ND		ug/Kg	04/07/18	17:44	NP	430825
1,1,1,2-Tetrachloroethane	SW8260B	1	2.6	14	ND		ug/Kg	04/07/18	17:44	NP	430825
m,p-Xylene	SW8260B	1	4.3	14	ND		ug/Kg	04/07/18	17:44	NP	430825
o-Xylene	SW8260B	1	2.3	14	ND		ug/Kg	04/07/18	17:44	NP	430825
Styrene	SW8260B	1	2.2	14	ND		ug/Kg	04/07/18	17:44	NP	430825
Bromoform	SW8260B	1	2.3	14	ND		ug/Kg	04/07/18	17:44	NP	430825
Isopropyl Benzene	SW8260B	1	2.2	14	ND		ug/Kg	04/07/18	17:44	NP	430825
n-Propylbenzene	SW8260B	1	2.1	14	ND		ug/Kg	04/07/18	17:44	NP	430825
Bromobenzene	SW8260B	1	2.4	14	ND		ug/Kg	04/07/18	17:44	NP	430825
1,1,2,2-Tetrachloroethane	SW8260B	1	2.6	14	ND		ug/Kg	04/07/18	17:44	NP	430825
2-Chlorotoluene	SW8260B	1	2.4	14	ND		ug/Kg	04/07/18	17:44	NP	430825
1,3,5-Trimethylbenzene	SW8260B	1	2.1	14	ND		ug/Kg	04/07/18	17:44	NP	430825
1,2,3-Trichloropropane	SW8260B	1	2.6	14	ND		ug/Kg	04/07/18	17:44	NP	430825
4-Chlorotoluene	SW8260B	1	2.2	14	ND		ug/Kg	04/07/18	17:44	NP	430825
tert-Butylbenzene	SW8260B	1	2.2	14	ND		ug/Kg	04/07/18	17:44	NP	430825
1,2,4-Trimethylbenzene	SW8260B	1	1.8	14	ND		ug/Kg	04/07/18	17:44	NP	430825
sec-Butyl Benzene	SW8260B	1	2.1	14	ND		ug/Kg	04/07/18	17:44	NP	430825
p-Isopropyltoluene	SW8260B	1	2.0	14	ND		ug/Kg	04/07/18	17:44	NP	430825
1,3-Dichlorobenzene	SW8260B	1	2.3	14	ND		ug/Kg	04/07/18	17:44	NP	430825
1,4-Dichlorobenzene	SW8260B	1	2.3	14	ND		ug/Kg	04/07/18	17:44	NP	430825
n-Butylbenzene	SW8260B	1	2.0	14	ND		ug/Kg	04/07/18	17:44	NP	430825
1,2-Dichlorobenzene	SW8260B	1	2.4	14	ND		ug/Kg	04/07/18	17:44	NP	430825
1,2-Dibromo-3-Chloropropane	SW8260B	1	2.5	14	ND		ug/Kg	04/07/18	17:44	NP	430825
Hexachlorobutadiene	SW8260B	1	1.9	14	ND		ug/Kg	04/07/18	17:44	NP	430825
1,2,4-Trichlorobenzene	SW8260B	1	2.0	14	ND		ug/Kg	04/07/18	17:44	NP	430825
Naphthalene	SW8260B	1	2.3	14	ND		ug/Kg	04/07/18	17:44	NP	430825
1,2,3-Trichlorobenzene	SW8260B	1	2.3	14	ND		ug/Kg	04/07/18	17:44	NP	430825
2-Butanone	SW8260B	1	3.1	14	ND		ug/Kg	04/07/18	17:44	NP	430825
(S) Dibromofluoromethane	SW8260B		59.8 - 148		**114**		%	04/07/18	17:44	NP	430825
(S) Toluene-d8	SW8260B		55.2 - 133		**111**		%	04/07/18	17:44	NP	430825
(S) 4-Bromofluorobenzene	SW8260B		55.8 - 141		**128**		%	04/07/18	17:44	NP	430825

Torrent LABORATORY, INC.

SAMPLE RESULTS

Report prepared for: Peter Langtry
Cornerstone Earth Group

Date/Time Received: 04/04/18, 4:15 pm
Date Reported: 04/09/18

Client Sample ID:	EB-21 (9.5-10)	**Lab Sample ID:**	1804039-018B
Project Name/Location:	1433-1493 El Camino Real	**Sample Matrix:**	Soil
Project Number:	958-1-5		
Date/Time Sampled:	04/04/18 / 15:10		
SDG:			

Prep Method:	5035GRO	**Prep Batch Date/Time:**	4/7/18	8:12:00AM
Prep Batch ID:	1104079	**Prep Analyst:**	NPAR	

Parameters:	Analysis Method	DF	MDL	PQL	Results	Q	Units	Analyzed	Time	By	Analytical Batch
TPH(Gasoline)	8260TPH	1	59	140	ND		ug/Kg	04/07/18	17:44	NP	430825
(S) 4-Bromofluorobenzene	8260TPH		43.9 - 127		**111**		%	04/07/18	17:44	NP	430825

Torrent LABORATORY, INC.

SAMPLE RESULTS

Report prepared for: Peter Langtry
Cornerstone Earth Group

Date/Time Received: 04/04/18, 4:15 pm
Date Reported: 04/09/18

Client Sample ID:	EB-21 (14.5-15)	**Lab Sample ID:**	1804039-019A
Project Name/Location:	1433-1493 El Camino Real	**Sample Matrix:**	Soil
Project Number:	958-1-5		
Date/Time Sampled:	04/04/18 / 15:12		
SDG:			

Prep Method:	3546_TPH	**Prep Batch Date/Time:**	4/5/18 6:00:00PM
Prep Batch ID:	1104005	**Prep Analyst:**	SNARASIMHAN

Parameters:	Analysis Method	DF	MDL	PQL	Results	Q	Units	Analyzed	Time	By	Analytical Batch
TPH as Diesel	SW8015B	1	0.85	2.0	**5.98**	x	mg/Kg	04/06/18	21:03	mk	430765
			Acceptance Limits								
Pentacosane (S)	SW8015B		59 - 129		**81.6**		%	04/06/18	21:03	mk	430765

NOTE: x- Diesel result due to over-lapping of oil range organics and presence of discrete peaks within diesel quantified range.

Torrent LABORATORY, INC.

SAMPLE RESULTS

Report prepared for: Peter Langtry
Cornerstone Earth Group

Date/Time Received: 04/04/18, 4:15 pm
Date Reported: 04/09/18

Client Sample ID:	EB-21 (14.5-15)	**Lab Sample ID:**	1804039-019B
Project Name/Location:	1433-1493 El Camino Real	**Sample Matrix:**	Soil
Project Number:	958-1-5		
Date/Time Sampled:	04/04/18 / 15:12		
SDG:			

Prep Method:	5035	**Prep Batch Date/Time:**	4/7/18	8:12:00AM
Prep Batch ID:	1104078	**Prep Analyst:**	NPAR	

Parameters:	Analysis Method	DF	MDL	PQL	Results	Q	Units	Analyzed	Time	By	Analytical Batch
Dichlorodifluoromethane	SW8260B	1	1.1	8.9	ND		ug/Kg	04/07/18	18:19	NP	430825
Chloromethane	SW8260B	1	1.6	8.9	ND		ug/Kg	04/07/18	18:19	NP	430825
Vinyl Chloride	SW8260B	1	1.8	8.9	ND		ug/Kg	04/07/18	18:19	NP	430825
Bromomethane	SW8260B	1	2.4	8.9	ND		ug/Kg	04/07/18	18:19	NP	430825
Chloroethane	SW8260B	1	2.7	8.9	ND		ug/Kg	04/07/18	18:19	NP	430825
Trichlorofluoromethane	SW8260B	1	1.8	8.9	ND		ug/Kg	04/07/18	18:19	NP	430825
1,1-Dichloroethene	SW8260B	1	1.8	8.9	ND		ug/Kg	04/07/18	18:19	NP	430825
Freon 113	SW8260B	1	1.7	8.9	ND		ug/Kg	04/07/18	18:19	NP	430825
Methylene Chloride	SW8260B	1	6.3	8.9	ND		ug/Kg	04/07/18	18:19	NP	430825
trans-1,2-Dichloroethene	SW8260B	1	1.9	8.9	ND		ug/Kg	04/07/18	18:19	NP	430825
MTBE	SW8260B	1	2.1	8.9	ND		ug/Kg	04/07/18	18:19	NP	430825
tert-Butanol	SW8260B	1	10	44	ND		ug/Kg	04/07/18	18:19	NP	430825
Diisopropyl ether (DIPE)	SW8260B	1	2.0	8.9	ND		ug/Kg	04/07/18	18:19	NP	430825
1,1-Dichloroethane	SW8260B	1	2.0	8.9	ND		ug/Kg	04/07/18	18:19	NP	430825
ETBE	SW8260B	1	2.0	8.9	ND		ug/Kg	04/07/18	18:19	NP	430825
cis-1,2-Dichloroethene	SW8260B	1	2.0	8.9	ND		ug/Kg	04/07/18	18:19	NP	430825
2,2-Dichloropropane	SW8260B	1	1.7	8.9	ND		ug/Kg	04/07/18	18:19	NP	430825
Bromochloromethane	SW8260B	1	2.1	8.9	ND		ug/Kg	04/07/18	18:19	NP	430825
Chloroform	SW8260B	1	2.1	8.9	ND		ug/Kg	04/07/18	18:19	NP	430825
Carbon Tetrachloride	SW8260B	1	1.8	8.9	ND		ug/Kg	04/07/18	18:19	NP	430825
1,1,1-Trichloroethane	SW8260B	1	1.9	8.9	ND		ug/Kg	04/07/18	18:19	NP	430825
1,1-Dichloropropene	SW8260B	1	1.8	8.9	ND		ug/Kg	04/07/18	18:19	NP	430825
Benzene	SW8260B	1	2.0	8.9	ND		ug/Kg	04/07/18	18:19	NP	430825
TAME	SW8260B	1	2.0	8.9	ND		ug/Kg	04/07/18	18:19	NP	430825
1,2-Dichloroethane	SW8260B	1	2.1	8.9	ND		ug/Kg	04/07/18	18:19	NP	430825
Trichloroethylene	SW8260B	1	1.6	8.9	ND		ug/Kg	04/07/18	18:19	NP	430825
Dibromomethane	SW8260B	1	1.6	8.9	ND		ug/Kg	04/07/18	18:19	NP	430825
1,2-Dichloropropane	SW8260B	1	1.7	8.9	ND		ug/Kg	04/07/18	18:19	NP	430825
Bromodichloromethane	SW8260B	1	1.8	8.9	ND		ug/Kg	04/07/18	18:19	NP	430825
cis-1,3-Dichloropropene	SW8260B	1	1.4	8.9	ND		ug/Kg	04/07/18	18:19	NP	430825
Toluene	SW8260B	1	1.6	8.9	ND		ug/Kg	04/07/18	18:19	NP	430825
Tetrachloroethylene	SW8260B	1	1.5	8.9	ND		ug/Kg	04/07/18	18:19	NP	430825
trans-1,3-Dichloropropene	SW8260B	1	1.5	8.9	ND		ug/Kg	04/07/18	18:19	NP	430825
1,1,2-Trichloroethane	SW8260B	1	1.6	8.9	ND		ug/Kg	04/07/18	18:19	NP	430825
Dibromochloromethane	SW8260B	1	1.7	8.9	ND		ug/Kg	04/07/18	18:19	NP	430825
1,3-Dichloropropane	SW8260B	1	1.6	8.9	ND		ug/Kg	04/07/18	18:19	NP	430825

Torrent LABORATORY, INC.

SAMPLE RESULTS

Report prepared for: Peter Langtry
Cornerstone Earth Group

Date/Time Received: 04/04/18, 4:15 pm
Date Reported: 04/09/18

Client Sample ID:	EB-21 (14.5-15)	**Lab Sample ID:**	1804039-019B
Project Name/Location:	1433-1493 El Camino Real	**Sample Matrix:**	Soil
Project Number:	958-1-5		
Date/Time Sampled:	04/04/18 / 15:12		
SDG:			

Prep Method:	5035	**Prep Batch Date/Time:**	4/7/18	8:12:00AM
Prep Batch ID:	1104078	**Prep Analyst:**	NPAR	

Parameters:	Analysis Method	DF	MDL	PQL	Results	Q	Units	Analyzed	Time	By	Analytical Batch
1,2-Dibromoethane	SW8260B	1	1.6	8.9	ND		ug/Kg	04/07/18	18:19	NP	430825
Chlorobenzene	SW8260B	1	1.6	8.9	ND		ug/Kg	04/07/18	18:19	NP	430825
Ethyl Benzene	SW8260B	1	1.5	8.9	ND		ug/Kg	04/07/18	18:19	NP	430825
1,1,1,2-Tetrachloroethane	SW8260B	1	1.7	8.9	ND		ug/Kg	04/07/18	18:19	NP	430825
m,p-Xylene	SW8260B	1	2.8	8.9	ND		ug/Kg	04/07/18	18:19	NP	430825
o-Xylene	SW8260B	1	1.5	8.9	ND		ug/Kg	04/07/18	18:19	NP	430825
Styrene	SW8260B	1	1.5	8.9	ND		ug/Kg	04/07/18	18:19	NP	430825
Bromoform	SW8260B	1	1.5	8.9	ND		ug/Kg	04/07/18	18:19	NP	430825
Isopropyl Benzene	SW8260B	1	1.4	8.9	ND		ug/Kg	04/07/18	18:19	NP	430825
n-Propylbenzene	SW8260B	1	1.4	8.9	ND		ug/Kg	04/07/18	18:19	NP	430825
Bromobenzene	SW8260B	1	1.6	8.9	ND		ug/Kg	04/07/18	18:19	NP	430825
1,1,2,2-Tetrachloroethane	SW8260B	1	1.7	8.9	ND		ug/Kg	04/07/18	18:19	NP	430825
2-Chlorotoluene	SW8260B	1	1.6	8.9	ND		ug/Kg	04/07/18	18:19	NP	430825
1,3,5-Trimethylbenzene	SW8260B	1	1.4	8.9	ND		ug/Kg	04/07/18	18:19	NP	430825
1,2,3-Trichloropropane	SW8260B	1	1.7	8.9	ND		ug/Kg	04/07/18	18:19	NP	430825
4-Chlorotoluene	SW8260B	1	1.5	8.9	ND		ug/Kg	04/07/18	18:19	NP	430825
tert-Butylbenzene	SW8260B	1	1.4	8.9	ND		ug/Kg	04/07/18	18:19	NP	430825
1,2,4-Trimethylbenzene	SW8260B	1	1.2	8.9	ND		ug/Kg	04/07/18	18:19	NP	430825
sec-Butyl Benzene	SW8260B	1	1.4	8.9	ND		ug/Kg	04/07/18	18:19	NP	430825
p-Isopropyltoluene	SW8260B	1	1.3	8.9	ND		ug/Kg	04/07/18	18:19	NP	430825
1,3-Dichlorobenzene	SW8260B	1	1.5	8.9	ND		ug/Kg	04/07/18	18:19	NP	430825
1,4-Dichlorobenzene	SW8260B	1	1.5	8.9	ND		ug/Kg	04/07/18	18:19	NP	430825
n-Butylbenzene	SW8260B	1	1.3	8.9	ND		ug/Kg	04/07/18	18:19	NP	430825
1,2-Dichlorobenzene	SW8260B	1	1.6	8.9	ND		ug/Kg	04/07/18	18:19	NP	430825
1,2-Dibromo-3-Chloropropane	SW8260B	1	1.6	8.9	ND		ug/Kg	04/07/18	18:19	NP	430825
Hexachlorobutadiene	SW8260B	1	1.2	8.9	ND		ug/Kg	04/07/18	18:19	NP	430825
1,2,4-Trichlorobenzene	SW8260B	1	1.3	8.9	ND		ug/Kg	04/07/18	18:19	NP	430825
Naphthalene	SW8260B	1	1.5	8.9	ND		ug/Kg	04/07/18	18:19	NP	430825
1,2,3-Trichlorobenzene	SW8260B	1	1.5	8.9	ND		ug/Kg	04/07/18	18:19	NP	430825
2-Butanone	SW8260B	1	2.0	8.9	ND		ug/Kg	04/07/18	18:19	NP	430825
(S) Dibromofluoromethane	SW8260B		59.8 - 148		**121**		%	04/07/18	18:19	NP	430825
(S) Toluene-d8	SW8260B		55.2 - 133		**115**		%	04/07/18	18:19	NP	430825
(S) 4-Bromofluorobenzene	SW8260B		55.8 - 141		**126**		%	04/07/18	18:19	NP	430825

Torrent LABORATORY, INC.

SAMPLE RESULTS

Report prepared for: Peter Langtry
Cornerstone Earth Group

Date/Time Received: 04/04/18, 4:15 pm
Date Reported: 04/09/18

Client Sample ID:	EB-21 (14.5-15)	**Lab Sample ID:**	1804039-019B
Project Name/Location:	1433-1493 El Camino Real	**Sample Matrix:**	Soil
Project Number:	958-1-5		
Date/Time Sampled:	04/04/18 / 15:12		
SDG:			

Prep Method:	5035GRO	**Prep Batch Date/Time:**	4/7/18	8:12:00AM
Prep Batch ID:	1104079	**Prep Analyst:**	NPAR	

Parameters:	Analysis Method	DF	MDL	PQL	Results	Q	Units	Analyzed	Time	By	Analytical Batch
TPH(Gasoline)	8260TPH	1	38	89	ND		ug/Kg	04/07/18	18:19	NP	430825
(S) 4-Bromofluorobenzene	8260TPH		43.9 - 127		**75.9**		%	04/07/18	18:19	NP	430825

MB Summary Report

Work Order:	1804039	**Prep Method:**	3546_TPH	**Prep Date:**	04/05/18	**Prep Batch:**	1104005
Matrix:	Soil	**Analytical Method:**	SW8015B	**Analyzed Date:**	4/5/2018	**Analytical Batch:**	430765
Units:	mg/Kg						

Parameters	MDL	PQL	Method Blank Conc.	Lab Qualifier
TPH as Diesel	0.85	2.0	0.997	
TPH as Motor Oil	3.2	10	ND	
Pentacosane (S)			116	

Work Order:	1804039	**Prep Method:**	5035	**Prep Date:**	04/06/18	**Prep Batch:**	1104070
Matrix:	Soil	**Analytical Method:**	SW8260B	**Analyzed Date:**	4/6/2018	**Analytical Batch:**	430812
Units:	ug/Kg						

Parameters	MDL	PQL	Method Blank Conc.	Lab Qualifier
Dichlorodifluoromethane	1.2	10	ND	
Chloromethane	1.8	10	ND	
Vinyl Chloride	2.0	10	ND	
Bromomethane	2.7	10	ND	
Chloroethane	3.0	10	ND	
Trichlorofluoromethane	2.1	10	ND	
1,1-Dichloroethene	2.0	10	ND	
Freon 113	1.9	10	ND	
Methylene Chloride	7.1	10	ND	
trans-1,2-Dichloroethene	2.1	10	ND	
MTBE	2.3	10	ND	
tert-Butanol	12	50	ND	
Diisopropyl ether (DIPE)	2.3	10	ND	
1,1-Dichloroethane	2.2	10	ND	
ETBE	2.3	10	5.5	
cis-1,2-Dichloroethene	2.2	10	ND	
2,2-Dichloropropane	1.9	10	ND	
Bromochloromethane	2.3	10	ND	
Chloroform	2.4	10	ND	
Carbon Tetrachloride	2.1	10	ND	
1,1,1-Trichloroethane	2.1	10	ND	
1,1-Dichloropropene	2.0	10	ND	
Benzene	2.2	10	ND	
TAME	2.3	10	5.7	
1,2-Dichloroethane	2.3	10	ND	
Trichloroethylene	1.8	10	ND	
Dibromomethane	1.8	10	ND	
1,2-Dichloropropane	1.9	10	ND	
Bromodichloromethane	2.0	10	ND	

MB Summary Report

Work Order:	1804039	**Prep Method:**	5035	**Prep Date:**	04/06/18	**Prep Batch:**	1104070
Matrix:	Soil	**Analytical Method:**	SW8260B	**Analyzed Date:**	4/6/2018	**Analytical Batch:**	430812
Units:	ug/Kg						

Parameters	MDL	PQL	Method Blank Conc.	Lab Qualifier
cis-1,3-Dichloropropene	1.6	10	ND	
Toluene	1.8	10	ND	
Tetrachloroethylene	1.7	10	ND	
trans-1,3-Dichloropropene	1.6	10	ND	
1,1,2-Trichloroethane	1.8	10	ND	
Dibromochloromethane	1.9	10	ND	
1,3-Dichloropropane	1.8	10	ND	
1,2-Dibromoethane	1.8	10	ND	
Chlorobenzene	1.8	10	ND	
Ethyl Benzene	1.7	10	ND	
1,1,1,2-Tetrachloroethane	1.9	10	ND	
m,p-Xylene	3.2	10	ND	
o-Xylene	1.7	10	ND	
Styrene	1.6	10	ND	
Bromoform	1.7	10	ND	
Isopropyl Benzene	1.6	10	ND	
n-Propylbenzene	1.6	10	ND	
Bromobenzene	1.8	10	ND	
1,1,2,2-Tetrachloroethane	1.9	10	ND	
2-Chlorotoluene	1.8	10	ND	
1,3,5-Trimethylbenzene	1.6	10	ND	
1,2,3-Trichloropropane	1.9	10	ND	
4-Chlorotoluene	1.6	10	ND	
tert-Butylbenzene	1.6	10	ND	
1,2,4-Trimethylbenzene	1.4	10	ND	
sec-Butyl Benzene	1.6	10	ND	
p-Isopropyltoluene	1.5	10	ND	
1,3-Dichlorobenzene	1.7	10	ND	
1,4-Dichlorobenzene	1.7	10	ND	
n-Butylbenzene	1.5	10	ND	
1,2-Dichlorobenzene	1.8	10	ND	
1,2-Dibromo-3-Chloropropane	1.8	10	ND	
Hexachlorobutadiene	1.4	10	1.9	
1,2,4-Trichlorobenzene	1.5	10	2.2	
Naphthalene	1.7	10	6.5	
1,2,3-Trichlorobenzene	1.7	10	2.6	
2-Butanone	1.7	10	4.9	
(S) Dibromofluoromethane			102	
(S) Toluene-d8			108	
(S) 4-Bromofluorobenzene			109	

MB Summary Report

Work Order:	1804039	**Prep Method:**	5035GRO	**Prep Date:**	04/06/18	**Prep Batch:**	1104071
Matrix:	Soil	**Analytical Method:**	SW8260B	**Analyzed Date:**	4/6/2018	**Analytical Batch:**	430812
Units:	ug/Kg						

Parameters	**MDL**	**PQL**	**Method Blank Conc.**	**Lab Qualifier**
TPH(Gasoline)	43	100	44	
(S) 4-Bromofluorobenzene			84.4	

MB Summary Report

Work Order:	1804039	**Prep Method:**	5035	**Prep Date:**	04/07/18	**Prep Batch:**	1104078
Matrix:	Soil	**Analytical Method:**	SW8260B	**Analyzed Date:**	4/7/2018	**Analytical Batch:**	430825
Units:	ug/Kg						

Parameters	MDL	PQL	Method Blank Conc.	Lab Qualifier
Dichlorodifluoromethane	1.2	10	ND	
Chloromethane	1.8	10	ND	
Vinyl Chloride	2.0	10	ND	
Bromomethane	2.7	10	ND	
Chloroethane	3.0	10	ND	
Trichlorofluoromethane	2.1	10	ND	
1,1-Dichloroethene	2.0	10	ND	
Freon 113	1.9	10	ND	
Methylene Chloride	7.1	10	ND	
trans-1,2-Dichloroethene	2.1	10	ND	
MTBE	2.3	10	ND	
tert-Butanol	12	50	ND	
Diisopropyl ether (DIPE)	2.3	10	ND	
1,1-Dichloroethane	2.2	10	ND	
ETBE	2.3	10	ND	
cis-1,2-Dichloroethene	2.2	10	ND	
2,2-Dichloropropane	1.9	10	ND	
Bromochloromethane	2.3	10	ND	
Chloroform	2.4	10	ND	
Carbon Tetrachloride	2.1	10	ND	
1,1,1-Trichloroethane	2.1	10	ND	
1,1-Dichloropropene	2.0	10	ND	
Benzene	2.2	10	ND	
TAME	2.3	10	ND	
1,2-Dichloroethane	2.3	10	ND	
Trichloroethylene	1.8	10	ND	
Dibromomethane	1.8	10	ND	
1,2-Dichloropropane	1.9	10	ND	
Bromodichloromethane	2.0	10	ND	
cis-1,3-Dichloropropene	1.6	10	ND	
Toluene	1.8	10	ND	
Tetrachloroethylene	1.7	10	ND	
trans-1,3-Dichloropropene	1.6	10	ND	
1,1,2-Trichloroethane	1.8	10	ND	
Dibromochloromethane	1.9	10	ND	
1,3-Dichloropropane	1.8	10	ND	
1,2-Dibromoethane	1.8	10	ND	
Chlorobenzene	1.8	10	ND	
Ethyl Benzene	1.7	10	ND	
1,1,1,2-Tetrachloroethane	1.9	10	ND	
m,p-Xylene	3.2	10	ND	

MB Summary Report

Work Order:	1804039	**Prep Method:**	5035	**Prep Date:**	04/07/18	**Prep Batch:**	1104078
Matrix:	Soil	**Analytical Method:**	SW8260B	**Analyzed Date:**	4/7/2018	**Analytical Batch:**	430825
Units:	ug/Kg						

Parameters	MDL	PQL	Method Blank Conc.	Lab Qualifier
o-Xylene	1.7	10	ND	
Styrene	1.6	10	2.8	
Bromoform	1.7	10	ND	
Isopropyl Benzene	1.6	10	1.8	
n-Propylbenzene	1.6	10	ND	
Bromobenzene	1.8	10	ND	
1,1,2,2-Tetrachloroethane	1.9	10	ND	
2-Chlorotoluene	1.8	10	ND	
1,3,5-Trimethylbenzene	1.6	10	1.8	
1,2,3-Trichloropropane	1.9	10	ND	
4-Chlorotoluene	1.6	10	ND	
tert-Butylbenzene	1.6	10	1.8	
1,2,4-Trimethylbenzene	1.4	10	2.3	
sec-Butyl Benzene	1.6	10	2.0	
p-Isopropyltoluene	1.5	10	2.6	
1,3-Dichlorobenzene	1.7	10	ND	
1,4-Dichlorobenzene	1.7	10	ND	
n-Butylbenzene	1.5	10	3.4	
1,2-Dichlorobenzene	1.8	10	ND	
1,2-Dibromo-3-Chloropropane	1.8	10	ND	
Hexachlorobutadiene	1.4	10	1.4	
1,2,4-Trichlorobenzene	1.5	10	3.0	
Naphthalene	1.7	10	5.2	
1,2,3-Trichlorobenzene	1.7	10	4.3	
2-Butanone	1.7	10	ND	
(S) Dibromofluoromethane			103	
(S) Toluene-d8			107	
(S) 4-Bromofluorobenzene			109	

Work Order:	1804039	**Prep Method:**	5035GRO	**Prep Date:**	04/07/18	**Prep Batch:**	1104079
Matrix:	Soil	**Analytical Method:**	SW8260B	**Analyzed Date:**	4/7/2018	**Analytical Batch:**	430825
Units:	ug/Kg						

Parameters	MDL	PQL	Method Blank Conc.	Lab Qualifier
TPH(Gasoline)	43	100	91	
(S) 4-Bromofluorobenzene			130	S

MB Summary Report

Work Order:	1804039	**Prep Method:**	5035	**Prep Date:**	04/08/18	**Prep Batch:**	1104088
Matrix:	Soil	**Analytical Method:**	SW8260B	**Analyzed Date:**	4/8/2018	**Analytical Batch:**	430841
Units:	ug/Kg						

Parameters	MDL	PQL	Method Blank Conc.	Lab Qualifier
Dichlorodifluoromethane	1.2	10	ND	
Chloromethane	1.8	10	ND	
Vinyl Chloride	2.0	10	ND	
Bromomethane	2.7	10	ND	
Chloroethane	3.0	10	ND	
Trichlorofluoromethane	2.1	10	ND	
1,1-Dichloroethene	2.0	10	ND	
Freon 113	1.9	10	ND	
Methylene Chloride	7.1	10	ND	
trans-1,2-Dichloroethene	2.1	10	ND	
MTBE	2.3	10	ND	
tert-Butanol	12	50	ND	
Diisopropyl ether (DIPE)	2.3	10	ND	
1,1-Dichloroethane	2.2	10	ND	
ETBE	2.3	10	ND	
cis-1,2-Dichloroethene	2.2	10	ND	
2,2-Dichloropropane	1.9	10	ND	
Bromochloromethane	2.3	10	ND	
Chloroform	2.4	10	ND	
Carbon Tetrachloride	2.1	10	ND	
1,1,1-Trichloroethane	2.1	10	ND	
1,1-Dichloropropene	2.0	10	ND	
Benzene	2.2	10	ND	
TAME	2.3	10	ND	
1,2-Dichloroethane	2.3	10	ND	
Trichloroethylene	1.8	10	ND	
Dibromomethane	1.8	10	ND	
1,2-Dichloropropane	1.9	10	ND	
Bromodichloromethane	2.0	10	ND	
cis-1,3-Dichloropropene	1.6	10	ND	
Toluene	1.8	10	ND	
Tetrachloroethylene	1.7	10	ND	
trans-1,3-Dichloropropene	1.6	10	ND	
1,1,2-Trichloroethane	1.8	10	ND	
Dibromochloromethane	1.9	10	ND	
1,3-Dichloropropane	1.8	10	ND	
1,2-Dibromoethane	1.8	10	ND	
Chlorobenzene	1.8	10	ND	
Ethyl Benzene	1.7	10	ND	
1,1,1,2-Tetrachloroethane	1.9	10	ND	
m,p-Xylene	3.2	10	ND	

MB Summary Report

Work Order:	1804039	**Prep Method:**	5035	**Prep Date:**	04/08/18	**Prep Batch:**	1104088
Matrix:	Soil	**Analytical Method:**	SW8260B	**Analyzed Date:**	4/8/2018	**Analytical Batch:**	430841
Units:	ug/Kg						

Parameters	MDL	PQL	Method Blank Conc.	Lab Qualifier
o-Xylene	1.7	10	ND	
Styrene	1.6	10	ND	
Bromoform	1.7	10	ND	
Isopropyl Benzene	1.6	10	ND	
n-Propylbenzene	1.6	10	ND	
Bromobenzene	1.8	10	ND	
1,1,2,2-Tetrachloroethane	1.9	10	ND	
2-Chlorotoluene	1.8	10	ND	
1,3,5-Trimethylbenzene	1.6	10	ND	
1,2,3-Trichloropropane	1.9	10	ND	
4-Chlorotoluene	1.6	10	ND	
tert-Butylbenzene	1.6	10	ND	
1,2,4-Trimethylbenzene	1.4	10	ND	
sec-Butyl Benzene	1.6	10	ND	
p-Isopropyltoluene	1.5	10	1.5	
1,3-Dichlorobenzene	1.7	10	ND	
1,4-Dichlorobenzene	1.7	10	ND	
n-Butylbenzene	1.5	10	1.7	
1,2-Dichlorobenzene	1.8	10	ND	
1,2-Dibromo-3-Chloropropane	1.8	10	ND	
Hexachlorobutadiene	1.4	10	ND	
1,2,4-Trichlorobenzene	1.5	10	ND	
Naphthalene	1.7	10	ND	
1,2,3-Trichlorobenzene	1.7	10	ND	
2-Butanone	1.7	10	ND	
(S) Dibromofluoromethane			107	
(S) Toluene-d8			101	
(S) 4-Bromofluorobenzene			103	

Work Order:	1804039	**Prep Method:**	5035GRO	**Prep Date:**	04/08/18	**Prep Batch:**	1104091
Matrix:	Soil	**Analytical Method:**	SW8260B	**Analyzed Date:**	4/8/2018	**Analytical Batch:**	430841
Units:	ug/Kg						

Parameters	MDL	PQL	Method Blank Conc.	Lab Qualifier
TPH(Gasoline)	43	100	74	
(S) 4-Bromofluorobenzene			123	

MB Summary Report

Work Order:	1804039	**Prep Method:**	5035	**Prep Date:**	04/09/18	**Prep Batch:**	1104109
Matrix:	Soil	**Analytical Method:**	SW8260B	**Analyzed Date:**	4/9/2018	**Analytical Batch:**	430855
Units:	ug/Kg						

Parameters	MDL	PQL	Method Blank Conc.	Lab Qualifier
Dichlorodifluoromethane	1.2	10	ND	
Chloromethane	1.8	10	ND	
Vinyl Chloride	2.0	10	ND	
Bromomethane	2.7	10	ND	
Chloroethane	3.0	10	ND	
Trichlorofluoromethane	2.1	10	ND	
1,1-Dichloroethene	2.0	10	ND	
Freon 113	1.9	10	ND	
Methylene Chloride	7.1	10	ND	
trans-1,2-Dichloroethene	2.1	10	ND	
MTBE	2.3	10	ND	
tert-Butanol	12	50	ND	
Diisopropyl ether (DIPE)	2.3	10	ND	
1,1-Dichloroethane	2.2	10	ND	
ETBE	2.3	10	ND	
cis-1,2-Dichloroethene	2.2	10	ND	
2,2-Dichloropropane	1.9	10	ND	
Bromochloromethane	2.3	10	ND	
Chloroform	2.4	10	ND	
Carbon Tetrachloride	2.1	10	ND	
1,1,1-Trichloroethane	2.1	10	ND	
1,1-Dichloropropene	2.0	10	ND	
Benzene	2.2	10	ND	
TAME	2.3	10	ND	
1,2-Dichloroethane	2.3	10	ND	
Trichloroethylene	1.8	10	ND	
Dibromomethane	1.8	10	ND	
1,2-Dichloropropane	1.9	10	ND	
Bromodichloromethane	2.0	10	ND	
cis-1,3-Dichloropropene	1.6	10	ND	
Toluene	1.8	10	ND	
Tetrachloroethylene	1.7	10	ND	
trans-1,3-Dichloropropene	1.6	10	ND	
1,1,2-Trichloroethane	1.8	10	ND	
Dibromochloromethane	1.9	10	ND	
1,3-Dichloropropane	1.8	10	ND	
1,2-Dibromoethane	1.8	10	ND	
Chlorobenzene	1.8	10	ND	
Ethyl Benzene	1.7	10	ND	
1,1,1,2-Tetrachloroethane	1.9	10	ND	
m,p-Xylene	3.2	10	ND	

MB Summary Report

Work Order:	1804039	**Prep Method:**	5035	**Prep Date:**	04/09/18	**Prep Batch:**	1104109
Matrix:	Soil	**Analytical Method:**	SW8260B	**Analyzed Date:**	4/9/2018	**Analytical Batch:**	430855
Units:	ug/Kg						

Parameters	MDL	PQL	Method Blank Conc.	Lab Qualifier
o-Xylene	1.7	10	ND	
Styrene	1.6	10	ND	
Bromoform	1.7	10	ND	
Isopropyl Benzene	1.6	10	ND	
n-Propylbenzene	1.6	10	ND	
Bromobenzene	1.8	10	ND	
1,1,2,2-Tetrachloroethane	1.9	10	ND	
2-Chlorotoluene	1.8	10	ND	
1,3,5-Trimethylbenzene	1.6	10	ND	
1,2,3-Trichloropropane	1.9	10	ND	
4-Chlorotoluene	1.6	10	ND	
tert-Butylbenzene	1.6	10	ND	
1,2,4-Trimethylbenzene	1.4	10	ND	
sec-Butyl Benzene	1.6	10	ND	
p-Isopropyltoluene	1.5	10	ND	
1,3-Dichlorobenzene	1.7	10	ND	
1,4-Dichlorobenzene	1.7	10	ND	
n-Butylbenzene	1.5	10	ND	
1,2-Dichlorobenzene	1.8	10	ND	
1,2-Dibromo-3-Chloropropane	1.8	10	ND	
Hexachlorobutadiene	1.4	10	ND	
1,2,4-Trichlorobenzene	1.5	10	ND	
Naphthalene	1.7	10	ND	
1,2,3-Trichlorobenzene	1.7	10	ND	
2-Butanone	1.7	10	ND	
(S) Dibromofluoromethane			107	
(S) Toluene-d8			106	
(S) 4-Bromofluorobenzene			110	

MB Summary Report

Work Order:	1804039	**Prep Method:**	5035	**Prep Date:**	04/09/18	**Prep Batch:**	1104109
Matrix:	Soil	**Analytical Method:**	SW8260B	**Analyzed Date:**	4/9/2018	**Analytical Batch:**	430855
Units:	ug/Kg						

Parameters	MDL	PQL	Method Blank Conc.	Lab Qualifier
Dichlorodifluoromethane	120	1000	ND	
Chloromethane	180	1000	ND	
Vinyl Chloride	200	1000	ND	
Bromomethane	270	1000	ND	
Chloroethane	300	1000	ND	
Trichlorofluoromethane	210	1000	ND	
1,1-Dichloroethene	200	1000	ND	
Freon 113	190	1000	ND	
Methylene Chloride	710	1000	ND	
trans-1,2-Dichloroethene	210	1000	ND	
MTBE	230	1000	ND	
tert-Butanol	1200	5000	ND	
Diisopropyl ether (DIPE)	230	1000	ND	
1,1-Dichloroethane	220	1000	ND	
ETBE	230	1000	ND	
cis-1,2-Dichloroethene	220	1000	ND	
2,2-Dichloropropane	190	1000	ND	
Bromochloromethane	230	1000	ND	
Chloroform	240	1000	ND	
Carbon Tetrachloride	210	1000	ND	
1,1,1-Trichloroethane	210	1000	ND	
1,1-Dichloropropene	200	1000	ND	
Benzene	220	1000	ND	
TAME	230	1000	ND	
1,2-Dichloroethane	230	1000	ND	
Trichloroethylene	180	1000	ND	
Dibromomethane	180	1000	ND	
1,2-Dichloropropane	190	1000	ND	
Bromodichloromethane	200	1000	ND	
cis-1,3-Dichloropropene	160	1000	ND	
Toluene	180	1000	ND	
Tetrachloroethylene	170	1000	ND	
trans-1,3-Dichloropropene	160	1000	ND	
1,1,2-Trichloroethane	180	1000	ND	
Dibromochloromethane	190	1000	ND	
1,3-Dichloropropane	180	1000	ND	
1,2-Dibromoethane	180	1000	ND	
Chlorobenzene	180	1000	ND	
Ethyl Benzene	170	1000	ND	
1,1,1,2-Tetrachloroethane	190	1000	ND	
m,p-Xylene	320	1000	ND	

MB Summary Report

Work Order:	1804039	**Prep Method:**	5035	**Prep Date:**	04/09/18	**Prep Batch:**	1104109
Matrix:	Soil	**Analytical Method:**	SW8260B	**Analyzed Date:**	4/9/2018	**Analytical Batch:**	430855
Units:	ug/Kg						

Parameters	MDL	PQL	Method Blank Conc.	Lab Qualifier
o-Xylene	170	1000	ND	
Styrene	160	1000	ND	
Bromoform	170	1000	ND	
Isopropyl Benzene	160	1000	ND	
n-Propylbenzene	160	1000	ND	
Bromobenzene	180	1000	ND	
1,1,2,2-Tetrachloroethane	190	1000	ND	
2-Chlorotoluene	180	1000	ND	
1,3,5-Trimethylbenzene	160	1000	ND	
1,2,3-Trichloropropane	190	1000	ND	
4-Chlorotoluene	160	1000	ND	
tert-Butylbenzene	160	1000	ND	
1,2,4-Trimethylbenzene	140	1000	210	
sec-Butyl Benzene	160	1000	ND	
p-Isopropyltoluene	150	1000	ND	
1,3-Dichlorobenzene	170	1000	ND	
1,4-Dichlorobenzene	170	1000	ND	
n-Butylbenzene	150	1000	150	
1,2-Dichlorobenzene	180	1000	ND	
1,2-Dibromo-3-Chloropropane	180	1000	ND	
Hexachlorobutadiene	140	1000	ND	
1,2,4-Trichlorobenzene	150	1000	ND	
Naphthalene	170	1000	ND	
1,2,3-Trichlorobenzene	170	1000	ND	
2-Butanone	170	1000	ND	
(S) Dibromofluoromethane			100	
(S) Toluene-d8			105	
(S) 4-Bromofluorobenzene			106	

Work Order:	1804039	**Prep Method:**	5035GRO	**Prep Date:**	04/09/18	**Prep Batch:**	1104111
Matrix:	Soil	**Analytical Method:**	SW8260B	**Analyzed Date:**	4/9/2018	**Analytical Batch:**	430855
Units:	ug/Kg						

Parameters	MDL	PQL	Method Blank Conc.	Lab Qualifier
TPH(Gasoline)	43	100	ND	
(S) 4-Bromofluorobenzene			117	

MB Summary Report

Work Order:	1804039	**Prep Method:**	5035GRO	**Prep Date:**	04/09/18	**Prep Batch:**	1104111
Matrix:	Soil	**Analytical Method:**	SW8260B	**Analyzed Date:**	4/9/2018	**Analytical Batch:**	430855
Units:	ug/Kg						

Parameters	MDL	PQL	Method Blank Conc.	Lab Qualifier
TPH(Gasoline)	4300	10000	ND	
(S) 4-Bromofluorobenzene			111	

MB Summary Report

Work Order:	1804039	**Prep Method:**	5035	**Prep Date:**	04/12/18	**Prep Batch:**	1104231
Matrix:	Soil	**Analytical Method:**	SW8260B	**Analyzed Date:**	4/12/2018	**Analytical Batch:**	430971
Units:	ug/Kg						

Parameters	MDL	PQL	Method Blank Conc.	Lab Qualifier
Dichlorodifluoromethane	1.2	10	ND	
Chloromethane	1.8	10	ND	
Vinyl Chloride	2.0	10	ND	
Bromomethane	2.7	10	ND	
Chloroethane	3.0	10	ND	
Trichlorofluoromethane	2.1	10	ND	
1,1-Dichloroethene	2.0	10	ND	
Freon 113	1.9	10	ND	
Methylene Chloride	7.1	10	ND	
trans-1,2-Dichloroethene	2.1	10	ND	
MTBE	2.3	10	ND	
tert-Butanol	12	50	ND	
Diisopropyl ether (DIPE)	2.3	10	ND	
1,1-Dichloroethane	2.2	10	ND	
ETBE	2.3	10	ND	
cis-1,2-Dichloroethene	2.2	10	ND	
2,2-Dichloropropane	1.9	10	ND	
Bromochloromethane	2.3	10	ND	
Chloroform	2.4	10	ND	
Carbon Tetrachloride	2.1	10	ND	
1,1,1-Trichloroethane	2.1	10	ND	
1,1-Dichloropropene	2.0	10	ND	
Benzene	2.2	10	ND	
TAME	2.3	10	ND	
1,2-Dichloroethane	2.3	10	ND	
Trichloroethylene	1.8	10	ND	
Dibromomethane	1.8	10	ND	
1,2-Dichloropropane	1.9	10	ND	
Bromodichloromethane	2.0	10	ND	
cis-1,3-Dichloropropene	1.6	10	ND	
Toluene	1.8	10	ND	
Tetrachloroethylene	1.7	10	ND	
trans-1,3-Dichloropropene	1.6	10	ND	
1,1,2-Trichloroethane	1.8	10	ND	
Dibromochloromethane	1.9	10	ND	
1,3-Dichloropropane	1.8	10	ND	
1,2-Dibromoethane	1.8	10	ND	
Chlorobenzene	1.8	10	ND	
Ethyl Benzene	1.7	10	ND	
1,1,1,2-Tetrachloroethane	1.9	10	ND	
m,p-Xylene	3.2	10	ND	

MB Summary Report

Work Order:	1804039	**Prep Method:**	5035	**Prep Date:**	04/12/18	**Prep Batch:**	1104231
Matrix:	Soil	**Analytical Method:**	SW8260B	**Analyzed Date:**	4/12/2018	**Analytical Batch:**	430971
Units:	ug/Kg						

Parameters	MDL	PQL	Method Blank Conc.	Lab Qualifier
o-Xylene	1.7	10	ND	
Styrene	1.6	10	ND	
Bromoform	1.7	10	ND	
Isopropyl Benzene	1.6	10	ND	
n-Propylbenzene	1.6	10	ND	
Bromobenzene	1.8	10	ND	
1,1,2,2-Tetrachloroethane	1.9	10	ND	
2-Chlorotoluene	1.8	10	ND	
1,3,5-Trimethylbenzene	1.6	10	ND	
1,2,3-Trichloropropane	1.9	10	ND	
4-Chlorotoluene	1.6	10	ND	
tert-Butylbenzene	1.6	10	ND	
1,2,4-Trimethylbenzene	1.4	10	2.0	
sec-Butyl Benzene	1.6	10	ND	
p-Isopropyltoluene	1.5	10	ND	
1,3-Dichlorobenzene	1.7	10	ND	
1,4-Dichlorobenzene	1.7	10	ND	
n-Butylbenzene	1.5	10	ND	
1,2-Dichlorobenzene	1.8	10	ND	
1,2-Dibromo-3-Chloropropane	1.8	10	ND	
Hexachlorobutadiene	1.4	10	ND	
1,2,4-Trichlorobenzene	1.5	10	ND	
Naphthalene	1.7	10	ND	
1,2,3-Trichlorobenzene	1.7	10	ND	
2-Butanone	1.7	10	ND	
(S) Dibromofluoromethane			104	
(S) Toluene-d8			104	
(S) 4-Bromofluorobenzene			108	

MB Summary Report

Work Order:	1804039	**Prep Method:**	5035	**Prep Date:**	04/13/18	**Prep Batch:**	1104252
Matrix:	Soil	**Analytical Method:**	SW8260B	**Analyzed Date:**	4/13/2018	**Analytical Batch:**	430986
Units:	ug/Kg						

Parameters	MDL	PQL	Method Blank Conc.	Lab Qualifier
Dichlorodifluoromethane	1.2	10	ND	
Chloromethane	1.8	10	ND	
Vinyl Chloride	2.0	10	ND	
Bromomethane	2.7	10	ND	
Chloroethane	3.0	10	ND	
Trichlorofluoromethane	2.1	10	ND	
1,1-Dichloroethene	2.0	10	ND	
Freon 113	1.9	10	ND	
Methylene Chloride	7.1	10	ND	
trans-1,2-Dichloroethene	2.1	10	ND	
MTBE	2.3	10	ND	
tert-Butanol	12	50	ND	
Diisopropyl ether (DIPE)	2.3	10	ND	
1,1-Dichloroethane	2.2	10	ND	
ETBE	2.3	10	ND	
cis-1,2-Dichloroethene	2.2	10	ND	
2,2-Dichloropropane	1.9	10	ND	
Bromochloromethane	2.3	10	ND	
Chloroform	2.4	10	ND	
Carbon Tetrachloride	2.1	10	ND	
1,1,1-Trichloroethane	2.1	10	ND	
1,1-Dichloropropene	2.0	10	ND	
Benzene	2.2	10	ND	
TAME	2.3	10	ND	
1,2-Dichloroethane	2.3	10	ND	
Trichloroethylene	1.8	10	ND	
Dibromomethane	1.8	10	ND	
1,2-Dichloropropane	1.9	10	ND	
Bromodichloromethane	2.0	10	ND	
cis-1,3-Dichloropropene	1.6	10	ND	
Toluene	1.8	10	ND	
Tetrachloroethylene	1.7	10	ND	
trans-1,3-Dichloropropene	1.6	10	ND	
1,1,2-Trichloroethane	1.8	10	ND	
Dibromochloromethane	1.9	10	ND	
1,3-Dichloropropane	1.8	10	ND	
1,2-Dibromoethane	1.8	10	ND	
Chlorobenzene	1.8	10	ND	
Ethyl Benzene	1.7	10	ND	
1,1,1,2-Tetrachloroethane	1.9	10	ND	
m,p-Xylene	3.2	10	ND	

MB Summary Report

Work Order:	1804039	**Prep Method:**	5035	**Prep Date:**	04/13/18	**Prep Batch:**	1104252
Matrix:	Soil	**Analytical Method:**	SW8260B	**Analyzed Date:**	4/13/2018	**Analytical Batch:**	430986
Units:	ug/Kg						

Parameters	MDL	PQL	Method Blank Conc.	Lab Qualifier
o-Xylene	1.7	10	ND	
Styrene	1.6	10	ND	
Bromoform	1.7	10	ND	
Isopropyl Benzene	1.6	10	ND	
n-Propylbenzene	1.6	10	ND	
Bromobenzene	1.8	10	ND	
1,1,2,2-Tetrachloroethane	1.9	10	ND	
2-Chlorotoluene	1.8	10	ND	
1,3,5-Trimethylbenzene	1.6	10	ND	
1,2,3-Trichloropropane	1.9	10	ND	
4-Chlorotoluene	1.6	10	ND	
tert-Butylbenzene	1.6	10	ND	
1,2,4-Trimethylbenzene	1.4	10	1.6	
sec-Butyl Benzene	1.6	10	ND	
p-Isopropyltoluene	1.5	10	ND	
1,3-Dichlorobenzene	1.7	10	ND	
1,4-Dichlorobenzene	1.7	10	ND	
n-Butylbenzene	1.5	10	ND	
1,2-Dichlorobenzene	1.8	10	ND	
1,2-Dibromo-3-Chloropropane	1.8	10	ND	
Hexachlorobutadiene	1.4	10	ND	
1,2,4-Trichlorobenzene	1.5	10	ND	
Naphthalene	1.7	10	ND	
1,2,3-Trichlorobenzene	1.7	10	ND	
2-Butanone	1.7	10	ND	
(S) Dibromofluoromethane			105	
(S) Toluene-d8			105	
(S) 4-Bromofluorobenzene			105	

MB Summary Report

Work Order:	1804039	**Prep Method:**	5035	**Prep Date:**	04/13/18	**Prep Batch:**	1104252
Matrix:	Soil	**Analytical Method:**	SW8260B	**Analyzed Date:**	4/13/2018	**Analytical Batch:**	430986
Units:	ug/Kg						

Parameters	MDL	PQL	Method Blank Conc.	Lab Qualifier
Dichlorodifluoromethane	120	1000	ND	
Chloromethane	180	1000	ND	
Vinyl Chloride	200	1000	ND	
Bromomethane	270	1000	ND	
Chloroethane	300	1000	ND	
Trichlorofluoromethane	210	1000	ND	
1,1-Dichloroethene	200	1000	ND	
Freon 113	190	1000	ND	
Methylene Chloride	710	1000	ND	
trans-1,2-Dichloroethene	210	1000	ND	
MTBE	230	1000	ND	
tert-Butanol	1200	5000	ND	
Diisopropyl ether (DIPE)	230	1000	ND	
1,1-Dichloroethane	220	1000	ND	
ETBE	230	1000	ND	
cis-1,2-Dichloroethene	220	1000	ND	
2,2-Dichloropropane	190	1000	ND	
Bromochloromethane	230	1000	ND	
Chloroform	240	1000	ND	
Carbon Tetrachloride	210	1000	ND	
1,1,1-Trichloroethane	210	1000	ND	
1,1-Dichloropropene	200	1000	ND	
Benzene	220	1000	ND	
TAME	230	1000	ND	
1,2-Dichloroethane	230	1000	ND	
Trichloroethylene	180	1000	ND	
Dibromomethane	180	1000	ND	
1,2-Dichloropropane	190	1000	ND	
Bromodichloromethane	200	1000	ND	
cis-1,3-Dichloropropene	160	1000	ND	
Toluene	180	1000	ND	
Tetrachloroethylene	170	1000	ND	
trans-1,3-Dichloropropene	160	1000	ND	
1,1,2-Trichloroethane	180	1000	ND	
Dibromochloromethane	190	1000	ND	
1,3-Dichloropropane	180	1000	ND	
1,2-Dibromoethane	180	1000	ND	
Chlorobenzene	180	1000	ND	
Ethyl Benzene	170	1000	ND	
1,1,1,2-Tetrachloroethane	190	1000	ND	
m,p-Xylene	320	1000	ND	

MB Summary Report

Work Order:	1804039	**Prep Method:**	5035	**Prep Date:**	04/13/18	**Prep Batch:**	1104252
Matrix:	Soil	**Analytical Method:**	SW8260B	**Analyzed Date:**	4/13/2018	**Analytical Batch:**	430986
Units:	ug/Kg						

Parameters	MDL	PQL	Method Blank Conc.	Lab Qualifier
o-Xylene	170	1000	ND	
Styrene	160	1000	ND	
Bromoform	170	1000	ND	
Isopropyl Benzene	160	1000	ND	
n-Propylbenzene	160	1000	ND	
Bromobenzene	180	1000	ND	
1,1,2,2-Tetrachloroethane	190	1000	ND	
2-Chlorotoluene	180	1000	ND	
1,3,5-Trimethylbenzene	160	1000	ND	
1,2,3-Trichloropropane	190	1000	ND	
4-Chlorotoluene	160	1000	ND	
tert-Butylbenzene	160	1000	ND	
1,2,4-Trimethylbenzene	140	1000	ND	
sec-Butyl Benzene	160	1000	ND	
p-Isopropyltoluene	150	1000	170	
1,3-Dichlorobenzene	170	1000	ND	
1,4-Dichlorobenzene	170	1000	ND	
n-Butylbenzene	150	1000	200	
1,2-Dichlorobenzene	180	1000	ND	
1,2-Dibromo-3-Chloropropane	180	1000	ND	
Hexachlorobutadiene	140	1000	ND	
1,2,4-Trichlorobenzene	150	1000	ND	
Naphthalene	170	1000	ND	
1,2,3-Trichlorobenzene	170	1000	ND	
2-Butanone	170	1000	ND	
(S) Dibromofluoromethane			107	
(S) Toluene-d8			104	
(S) 4-Bromofluorobenzene			106	

Work Order:	1804039	**Prep Method:**	5035GRO	**Prep Date:**	04/13/18	**Prep Batch:**	1104256
Matrix:	Soil	**Analytical Method:**	SW8260B	**Analyzed Date:**	4/13/2018	**Analytical Batch:**	430986
Units:	ug/Kg						

Parameters	MDL	PQL	Method Blank Conc.	Lab Qualifier
TPH(Gasoline)	43	100	94	
(S) 4-Bromofluorobenzene			88.8	

MB Summary Report

Work Order:	1804039	**Prep Method:**	5035GRO	**Prep Date:**	04/13/18	**Prep Batch:**	1104256
Matrix:	Soil	**Analytical Method:**	SW8260B	**Analyzed Date:**	4/13/2018	**Analytical Batch:**	430986
Units:	ug/Kg						

Parameters	**MDL**	**PQL**	**Method Blank Conc.**	**Lab Qualifier**
TPH(Gasoline)	4300	10000	6100	
(S) 4-Bromofluorobenzene			98.6	

LCS/LCSD Summary Report

Raw values are used in quality control assessment.

Work Order:	1804039	**Prep Method:**	3546_TPH	**Prep Date:**	04/05/18	**Prep Batch:**	1104005
Matrix:	Soil	**Analytical Method:**	SW8015B	**Analyzed Date:**	4/5/2018	**Analytical Batch:**	430765
Units:	mg/Kg						

Parameters	MDL	PQL	Method Blank Conc.	Spike Conc.	LCS % Recovery	LCSD % Recovery	LCS/LCSD % RPD	% Recovery Limits	% RPD Limits	Lab Qualifier
TPH as Diesel	0.85	2.0	0.997	25.0	72.5	73.4	1.64	52 - 115	30	
Pentacosane (S)				200	97.7	98.5		59 - 129		

Work Order:	1804039	**Prep Method:**	5035	**Prep Date:**	04/06/18	**Prep Batch:**	1104070
Matrix:	Soil	**Analytical Method:**	SW8260B	**Analyzed Date:**	4/6/2018	**Analytical Batch:**	430812
Units:	ug/Kg						

Parameters	MDL	PQL	Method Blank Conc.	Spike Conc.	LCS % Recovery	LCSD % Recovery	LCS/LCSD % RPD	% Recovery Limits	% RPD Limits	Lab Qualifier
1,1-Dichloroethene	2.0	10	ND	50.0	102	99.8	1.79	53.7 - 139	30	
Benzene	2.2	10	ND	50.0	109	108	1.29	66.5 - 135	30	
Trichloroethylene	1.8	10	ND	50.0	105	106	0.570	57.5 - 150	30	
Toluene	1.8	10	ND	50.0	118	112	5.04	56.8 - 134	30	
Chlorobenzene	1.8	10	ND	50.0	109	108	0.923	57.4 - 134	30	
(S) Dibromofluoromethane				50.0	98.5	97.8		59.8 - 148		
(S) Toluene-d8				50.0	111	107		55.2 - 133		
(S) 4-Bromofluorobenzene				50.0	112	108		55.8 - 141		

Work Order:	1804039	**Prep Method:**	5035GRO	**Prep Date:**	04/06/18	**Prep Batch:**	1104071
Matrix:	Soil	**Analytical Method:**	SW8260B	**Analyzed Date:**	4/7/2018	**Analytical Batch:**	430812
Units:	ug/Kg						

Parameters	MDL	PQL	Method Blank Conc.	Spike Conc.	LCS % Recovery	LCSD % Recovery	LCS/LCSD % RPD	% Recovery Limits	% RPD Limits	Lab Qualifier
TPH(Gasoline)	43	100	44	1000	92.0	94.9	3.10	48.2 - 132	30	
(S) 4-Bromofluorobenzene				50	90.9	92.0		43.9 - 127		

LCS/LCSD Summary Report

Raw values are used in quality control assessment.

Work Order:	1804039	**Prep Method:**	5035	**Prep Date:**	04/07/18	**Prep Batch:**	1104078
Matrix:	Soil	**Analytical Method:**	SW8260B	**Analyzed Date:**	4/7/2018	**Analytical Batch:**	430825
Units:	ug/Kg						

Parameters	MDL	PQL	Method Blank Conc.	Spike Conc.	LCS % Recovery	LCSD % Recovery	LCS/LCSD % RPD	% Recovery Limits	% RPD Limits	Lab Qualifier
1,1-Dichloroethene	2.0	10	ND	50.0	90.2	88.6	1.79	53.7 - 139	30	
Benzene	2.2	10	ND	50.0	103	106	2.30	66.5 - 135	30	
Trichloroethylene	1.8	10	ND	50.0	109	112	2.53	57.5 - 150	30	
Toluene	1.8	10	ND	50.0	105	112	6.11	56.8 - 134	30	
Chlorobenzene	1.8	10	ND	50.0	109	111	1.27	57.4 - 134	30	
(S) Dibromofluoromethane				50.0	102	105		59.8 - 148		
(S) Toluene-d8				50.0	107	112		55.2 - 133		
(S) 4-Bromofluorobenzene				50.0	101	110		55.8 - 141		

Work Order:	1804039	**Prep Method:**	5035GRO	**Prep Date:**	04/07/18	**Prep Batch:**	1104079
Matrix:	Soil	**Analytical Method:**	SW8260B	**Analyzed Date:**	4/7/2018	**Analytical Batch:**	430825
Units:	ug/Kg						

Parameters	MDL	PQL	Method Blank Conc.	Spike Conc.	LCS % Recovery	LCSD % Recovery	LCS/LCSD % RPD	% Recovery Limits	% RPD Limits	Lab Qualifier
TPH(Gasoline)	43	100	91	1000	94.4	118	22.2	48.2 - 132	30	
(S) 4-Bromofluorobenzene				50	115	133		43.9 - 127		,S

Work Order:	1804039	**Prep Method:**	5035	**Prep Date:**	04/08/18	**Prep Batch:**	1104088
Matrix:	Soil	**Analytical Method:**	SW8260B	**Analyzed Date:**	4/8/2018	**Analytical Batch:**	430841
Units:	ug/Kg						

Parameters	MDL	PQL	Method Blank Conc.	Spike Conc.	LCS % Recovery	LCSD % Recovery	LCS/LCSD % RPD	% Recovery Limits	% RPD Limits	Lab Qualifier
1,1-Dichloroethene	2.0	10	ND	50.0	92.6	89.2	3.74	53.7 - 139	30	,
Benzene	2.2	10	ND	50.0	106	104	1.53	66.5 - 135	30	,
Trichloroethylene	1.8	10	ND	50.0	107	107	0.560	57.5 - 150	30	,
Toluene	1.8	10	ND	50.0	107	106	0.750	56.8 - 134	30	,
Chlorobenzene	1.8	10	ND	50.0	107	107	0.187	57.4 - 134	30	,
(S) Dibromofluoromethane				50.0	108	107		59.8 - 148		,
(S) Toluene-d8				50.0	106	106		55.2 - 133		,
(S) 4-Bromofluorobenzene				50.0	108	108		55.8 - 141		,

LCS/LCSD Summary Report

Raw values are used in quality control assessment.

Work Order:	1804039	**Prep Method:**	5035GRO	**Prep Date:**	04/08/18	**Prep Batch:**	1104091
Matrix:	Soil	**Analytical Method:**	SW8260B	**Analyzed Date:**	4/8/2018	**Analytical Batch:**	430841
Units:	ug/Kg						

Parameters	MDL	PQL	Method Blank Conc.	Spike Conc.	LCS % Recovery	LCSD % Recovery	LCS/LCSD % RPD	% Recovery Limits	% RPD Limits	Lab Qualifier
TPH(Gasoline)	43	100	74	1000	110	104	5.61	48.2 - 132	30	,
(S) 4-Bromofluorobenzene				50	127	124		43.9 - 127		S,

Work Order:	1804039	**Prep Method:**	5035	**Prep Date:**	04/09/18	**Prep Batch:**	1104109
Matrix:	Soil	**Analytical Method:**	SW8260B	**Analyzed Date:**	4/9/2018	**Analytical Batch:**	430855
Units:	ug/Kg						

Parameters	MDL	PQL	Method Blank Conc.	Spike Conc.	LCS % Recovery	LCSD % Recovery	LCS/LCSD % RPD	% Recovery Limits	% RPD Limits	Lab Qualifier
1,1-Dichloroethene	2.0	10	ND	50.0	89.2	89.1	0.000	53.7 - 139	30	,
Benzene	2.2	10	ND	50.0	108	109	0.922	66.5 - 135	30	,
Trichloroethylene	1.8	10	ND	50.0	105	105	0.382	57.5 - 150	30	,
Toluene	1.8	10	ND	50.0	108	109	0.739	56.8 - 134	30	,
Chlorobenzene	1.8	10	ND	50.0	108	110	1.83	57.4 - 134	30	,
(S) Dibromofluoromethane				50.0	111	112		59.8 - 148		,
(S) Toluene-d8				50.0	108	108		55.2 - 133		,
(S) 4-Bromofluorobenzene				50.0	109	110		55.8 - 141		,

Work Order:	1804039	**Prep Method:**	5035GRO	**Prep Date:**	04/09/18	**Prep Batch:**	1104111
Matrix:	Soil	**Analytical Method:**	SW8260B	**Analyzed Date:**	4/9/2018	**Analytical Batch:**	430855
Units:	ug/Kg						

Parameters	MDL	PQL	Method Blank Conc.	Spike Conc.	LCS % Recovery	LCSD % Recovery	LCS/LCSD % RPD	% Recovery Limits	% RPD Limits	Lab Qualifier
TPH(Gasoline)	43	100	ND	1000	107	104	2.84	48.2 - 132	30	,
(S) 4-Bromofluorobenzene				50	121	124		43.9 - 127		,

LCS/LCSD Summary Report

Raw values are used in quality control assessment.

Work Order:	1804039	**Prep Method:**	5035	**Prep Date:**	04/12/18	**Prep Batch:**	1104231
Matrix:	Soil	**Analytical Method:**	SW8260B	**Analyzed Date:**	4/12/2018	**Analytical Batch:**	430971
Units:	ug/Kg						

Parameters	MDL	PQL	Method Blank Conc.	Spike Conc.	LCS % Recovery	LCSD % Recovery	LCS/LCSD % RPD	% Recovery Limits	% RPD Limits	Lab Qualifier
1,1-Dichloroethene	2.0	10	ND	50.0	95.3	94.2	1.27	53.7 - 139	30	,
Benzene	2.2	10	ND	50.0	106	105	0.944	66.5 - 135	30	,
Trichloroethylene	1.8	10	ND	50.0	110	107	2.40	57.5 - 150	30	,
Toluene	1.8	10	ND	50.0	109	107	2.41	56.8 - 134	30	,
Chlorobenzene	1.8	10	ND	50.0	107	104	2.85	57.4 - 134	30	,
(S) Dibromofluoromethane				50.0	113	113		59.8 - 148		,
(S) Toluene-d8				50.0	113	110		55.2 - 133		,
(S) 4-Bromofluorobenzene				50.0	110	112		55.8 - 141		,

Work Order:	1804039	**Prep Method:**	5035	**Prep Date:**	04/13/18	**Prep Batch:**	1104252
Matrix:	Soil	**Analytical Method:**	SW8260B	**Analyzed Date:**	4/13/2018	**Analytical Batch:**	430986
Units:	ug/Kg						

Parameters	MDL	PQL	Method Blank Conc.	Spike Conc.	LCS % Recovery	LCSD % Recovery	LCS/LCSD % RPD	% Recovery Limits	% RPD Limits	Lab Qualifier
1,1-Dichloroethene	2.0	10	ND	50.0	113	113	0.177	53.7 - 139	30	,
Benzene	2.2	10	ND	50.0	116	110	4.95	66.5 - 135	30	,
Trichloroethylene	1.8	10	ND	50.0	110	110	0.182	57.5 - 150	30	,
Toluene	1.8	10	ND	50.0	106	111	4.41	56.8 - 134	30	,
Chlorobenzene	1.8	10	ND	50.0	104	105	1.34	57.4 - 134	30	,
(S) Dibromofluoromethane				50.0	118	108		59.8 - 148		,
(S) Toluene-d8				50.0	108	112		55.2 - 133		,
(S) 4-Bromofluorobenzene				50.0	110	115		55.8 - 141		,

Work Order:	1804039	**Prep Method:**	5035GRO	**Prep Date:**	04/13/18	**Prep Batch:**	1104256
Matrix:	Soil	**Analytical Method:**	SW8260B	**Analyzed Date:**	4/13/2018	**Analytical Batch:**	430986
Units:	ug/Kg						

Parameters	MDL	PQL	Method Blank Conc.	Spike Conc.	LCS % Recovery	LCSD % Recovery	LCS/LCSD % RPD	% Recovery Limits	% RPD Limits	Lab Qualifier
TPH(Gasoline)	43	100	94	1000	111	114	2.67	48.2 - 132	30	,
(S) 4-Bromofluorobenzene				50	97.5	111		43.9 - 127		,

Laboratory Qualifiers and Definitions

DEFINITIONS:

Accuracy/Bias (% Recovery) - The closeness of agreement between an observed value and an accepted reference value.
Blank (Method/Preparation Blank) -MB/PB - An analyte-free matrix to which all reagents are added in the same volumes/proportions as used in sample processing. The method blank is used to document contamination resulting from the analytical process.
Duplicate - a field sample and/or laboratory QC sample prepared in duplicate following all of the same processes and procedures used on the original sample (sample duplicate, LCSD, MSD)
Laboratory Control Sample (LCS ad LCSD) - A known matrix spiked with compounds representative of the target analyte(s). This is used to document laboratory performance.
Matrix - the component or substrate that contains the analyte of interest (e.g., - groundwater, sediment, soil, waste water, etc)
Matrix Spike (MS/MSD) - Client sample spiked with identical concentrations of target analyte (s). The spiking occurs prior to the sample preparation and analysis. They are used to document the precision and bias of a method in a given sample matrix.
Method Detection Limit (MDL) - the minimum concentration of a substance that can be measured and reported with a 99% confidence that the analyte concentration is greater than zero
Practical Quantitation Limit/Reporting Limit/Limit of Quantitation (PQL/RL/LOQ) - a laboratory determined value at 2 to 5 times above the MDL that can be reproduced in a manner that results in a 99% confidence level that the result is both accurate and precise. PQLs/RLs/LODs reflect all preparation factors and/or dilution factors that have been applied to the sample during the preparation and/or analytical processes.
Precision (%RPD) - The agreement among a set of replicate/duplicate measurements without regard to known value of the replicates
Surrogate (S) or (Surr) - An organic compound which is similar to the target analyte(s) in chemical composition and behavior in the analytical process, but which is not normally found in environmental samples. Surrogates are used in most organic analysis to demonstrate matrix compatibility with the chosen method of analysis
Tentatively Identified Compound (TIC) - A compound not contained within the analytical calibration standards but present in the GCMS library of defined compounds. When the library is searched for an unknown compound, it can frequently give a tentative identification to the compound based on retention time and primary and secondary ion match. TICs are reported as estimates and are candidates for further investigation.
Units: the unit of measure used to express the reported result - **mg/L** and ***mg/Kg*** (equivalent to PPM - parts per million in **liquid** and ***solid***), **ug/L** and ***ug/Kg*** (equivalent to PPB - parts per billion in **liquid** and ***solid***), **ug/m3**, ***mg/m3***, **ppbv** and ***ppmv*** (all units of measure for reporting concentrations in air), **%** (equivalent to 10000 ppm or 1,000,000 ppb), **ug/Wipe** (concentration found on the surface of a single Wipe usually taken over a 100cm2 surface)

LABORATORY QUALIFIERS:

B - Indicates when the analyte is found in the associated method or preparation blank

D - Surrogate is not recoverable due to the necessary dilution of the sample

E - Indicates the reportable value is outside of the calibration range of the instrument but within the linear range of the instrument (unless otherwise noted) Values reported with an E qualifier should be considered as estimated.

H- Indicates that the recommended holding time for the analyte or compound has been exceeded

J- Indicates a value between the method MDL and PQL and that the reported concentration should be considered as estimated rather the quantitative

NA - Not Analyzed

N/A - Not Applicable

ND - Not Detected at a concentration greater than the PQL/RL or, if reported to the MDL, at greater than the MDL.

NR - Not recoverable - a matrix spike concentration is not recoverable due to a concentration within the original sample that is greater than four times the spike concentration added

R- The % RPD between a duplicate set of samples is outside of the absolute values established by laboratory control charts

S- Spike recovery is outside of established method and/or laboratory control limits. Further explanation of the use of this qualifier should be included within a case narrative

X -Used to indicate that a value based on pattern identification is within the pattern range but not typical of the pattern found in standards.

Sample Receipt Checklist

Client Name: Cornerstone Earth Group

Project Name: 1433-1493 El Camino Real

Work Order No.: 1804039

Date and Time Received: 4/4/2018 4:15:00PM

Received By: Kathie Evans

Physically Logged By: Helena Ueng

Checklist Completed By: Helena Ueng

Carrier Name: Client Drop Off

Chain of Custody (COC) Information

Chain of custody present?	Yes
Chain of custody signed when relinquished and received?	Yes
Chain of custody agrees with sample labels?	Yes
Custody seals intact on sample bottles?	Not Present

Sample Receipt Information

Custody seals intact on shipping container/cooler?	Not Present
Shipping Container/Cooler In Good Condition?	Yes
Samples in proper container/bottle?	Yes
Samples containers intact?	Yes
Sufficient sample volume for indicated test?	Yes

Sample Preservation and Hold Time (HT) Information

All samples received within holding time?	Yes			
Container/Temp Blank temperature in compliance?	Yes	Temperature:	2.0	°C
Water-VOA vials have zero headspace?	No VOA vials submitted			
Water-pH acceptable upon receipt?	N/A			

pH Checked by: N/A

pH Adjusted by: N/A

Comments:

Login Summary Report

Client ID: TL5119 Cornerstone Earth Group

Project Name: 1433-1493 El Camino Real

Project # : 958-1-5

Report Due Date: 4/13/2018

QC Level: II

TAT Requested: 3 Day Std:3

Date Received: 4/4/2018

Time Received: 4:15 pm

Comments:

Work Order # : ***1804039***

WO Sample ID	Client Sample ID	Collection Date/Time	Matrix	Scheduled Disposal	Sample On Hold	Test On Hold	Requested Tests	Subbed
1804039-001A	EB-20 (4.5-5)	04/04/18 12:53	Soil	10/01/18			TPHDO_S_8015(Mod) VOC_S_GROEN_VOC_8260B	
1804039-001B	EB-20 (4.5-5)	04/04/18 12:53	Soil	10/01/18				
1804039-002A	EB-20 (9.5-10)	04/04/18 12:57	Soil	10/01/18			TPHDO_S_8015(Mod) VOC_S_GROEN_VOC_8260B	
1804039-002B	EB-20 (9.5-10)	04/04/18 12:57	Soil	10/01/18				
1804039-003A	EB-20 (16-16.5)	04/04/18 13:00	Soil	10/01/18			TPHDO_S_8015(Mod) VOC_S_GROEN_VOC_8260B EN_VOC_8260B	
1804039-003B	EB-20 (16-16.5)	04/04/18 13:00	Soil	10/01/18				
1804039-004A	EB-20 (19.5-20)	04/04/18 13:05	Soil	10/01/18			Hold Samples	
1804039-005A	EB-18 (4.5-5)	04/04/18 13:27	Soil	10/01/18			TPHDO_S_8015(Mod) VOC_S_GROEN_VOC_8260B	
1804039-005B	EB-18 (4.5-5)	04/04/18 13:27	Soil	10/01/18				
1804039-006A	EB-18 (9.5-10)	04/04/18 13:30	Soil	10/01/18			TPHDO_S_8015(Mod) VOC_S_GROEN_VOC_8260B	
1804039-006B	EB-18 (9.5-10)	04/04/18 13:30	Soil	10/01/18				
1804039-007A	EB-18 (14.5-15)	04/04/18 13:35	Soil	10/01/18			TPHDO_S_8015(Mod)	

Login Summary Report

Client ID: TL5119 Cornerstone Earth Group

Project Name: 1433-1493 El Camino Real

Project # : 958-1-5

Report Due Date: 4/13/2018

QC Level: II

TAT Requested: 3 Day Std:3

Date Received: 4/4/2018

Time Received: 4:15 pm

Comments:

Work Order # : ***1804039***

WO Sample ID	Client Sample ID	Collection Date/Time	Matrix	Scheduled Disposal	Sample On Hold	Test On Hold	Requested Tests	Subbed
1804039-007B	EB-18 (14.5-15)	04/04/18 13:35	Soil	10/01/18			VOC_S_GROEN_VOC_8260B	
1804039-008A	EB-18 (19.5-20)	04/04/18 13:40	Soil	10/01/18			Hold Samples	
1804039-008B	EB-18 (19.5-20)	04/04/18 13:40	Soil	10/01/18			Hold Samples	
1804039-009A	EB-22 (4.5-5)	04/04/18 14:01	Soil	10/01/18			TPHDO_S_8015(Mod)	
1804039-009B	EB-22 (4.5-5)	04/04/18 14:01	Soil	10/01/18			VOC_S_GROEN_VOC_8260B	
1804039-010A	EB-22 (9.5-10)	04/04/18 14:04	Soil	10/01/18			TPHDO_S_8015(Mod)	
1804039-010B	EB-22 (9.5-10)	04/04/18 14:04	Soil	10/01/18			EN_VOC_8260B VOC_S_GROEN_VOC_8260B	
1804039-011A	EB-22 (16-16.5)	04/04/18 14:08	Soil	10/01/18			TPHDO_S_8015(Mod)	
1804039-011B	EB-22 (16-16.5)	04/04/18 14:08	Soil	10/01/18			VOC_S_GROEN_VOC_8260B	
1804039-012A	EB-22 (19.5-20)	04/04/18 14:12	Soil	10/01/18			Hold Samples	
1804039-012B	EB-22 (19.5-20)	04/04/18 14:12	Soil	10/01/18			Hold Samples VOC_S_GROEN_VOC_8260B	
1804039-013A	EB-23 (4.5-5)	04/04/18 14:38	Soil	10/01/18			TPHDO_S_8015(Mod)	
1804039-013B	EB-23 (4.5-5)	04/04/18 14:38	Soil	10/01/18				

Login Summary Report

Client ID: TL5119 Cornerstone Earth Group

Project Name: 1433-1493 El Camino Real

Project # : 958-1-5

Report Due Date: 4/13/2018

QC Level: II

TAT Requested: 3 Day Std:3

Date Received: 4/4/2018

Time Received: 4:15 pm

Comments:

Work Order # : ***1804039***

WO Sample ID	Client Sample ID	Collection Date/Time	Matrix	Scheduled Disposal	Sample On Hold	Test On Hold	Requested Tests	Subbed
1804039-014A	EB-23 (9.5-10)	04/04/18 14:41	Soil	10/01/18			EN_VOC_8260B VOC_S_GRO TPHDO_S_8015(Mod)	
1804039-014B	EB-23 (9.5-10)	04/04/18 14:41	Soil	10/01/18			VOC_S_GRO EN_VOC_8260B TPHDO_S_8015(Mod)	
1804039-015A	EB-23 (14.5-15)	04/04/18 14:45	Soil	10/01/18			VOC_S_GRO EN_VOC_8260B TPHDO_S_8015(Mod)	
1804039-015B	EB-23 (14.5-15)	04/04/18 14:45	Soil	10/01/18			VOC_S_GRO EN_VOC_8260B	
1804039-016A	EB-23 (19.5-20)	04/04/18 14:50	Soil	10/01/18			Hold Samples	
1804039-016B	EB-23 (19.5-20)	04/04/18 14:50	Soil	10/01/18			Hold Samples	
1804039-017A	EB-21 (4.5-5)	04/04/18 15:06	Soil	10/01/18			TPHDO_S_8015(Mod)	
1804039-017B	EB-21 (4.5-5)	04/04/18 15:06	Soil	10/01/18			VOC_S_GRO EN_VOC_8260B	
1804039-018A	EB-21 (9.5-10)	04/04/18 15:10	Soil	10/01/18			TPHDO_S_8015(Mod)	
1804039-018B	EB-21 (9.5-10)	04/04/18 15:10	Soil	10/01/18			VOC_S_GRO EN_VOC_8260B	
1804039-019A	EB-21 (14.5-15)	04/04/18 15:12	Soil	10/01/18			TPHDO_S_8015(Mod)	
1804039-019B	EB-21 (14.5-15)	04/04/18 15:12	Soil	10/01/18			VOC_S_GRO EN_VOC_8260B	

Login Summary Report

Client ID: TL5119 Cornerstone Earth Group

Project Name: 1433-1493 El Camino Real

Project # : 958-1-5

Report Due Date: 4/13/2018

QC Level: II

TAT Requested: 3 Day Std:3

Date Received: 4/4/2018

Time Received: 4:15 pm

Comments:

Work Order # : ***1804039***

WO Sample ID	Client Sample ID	Collection Date/Time	Matrix	Scheduled Disposal	Sample On Hold	Test On Hold	Requested Tests	Subbed
1804039-020A	EB-21 (19.5-20)	04/04/18 15:15	Soil	10/01/18			Hold Samples	
1804039-020B	EB-21 (19.5-20)	04/04/18 15:15	Soil	10/01/18			Hold Samples	

Torrent LABORATORY, INC.

CORNERSTONE EARTH GROUP

Chain of Custody Record

1804039

	Project Manager: Peter Langtry	Site Sampler: Sarah Kuehn	Date: 4/4/18	COC No:
Cornerstone Earth Group, Inc.	Tel/Fax: 408-245-4600 ext. 101	Lab Contact: Kathie	Lab: Torrent	3 of 4 COCs
1259 Oakmead Pkwy	Analysis Turnaround Time			Laboratory's Job No.
Sunnyvale, California 94085				
(408) 245-4600 Phone	TAT if different from Below _____			
(408) 245-4620 FAX	☐ 1 week			
Project Name: 1433-1493 El Camino Real	■ 3 days			
Site: Santa Clara, California	☐ 2 days			
Project Number: 958-1-5	☐ 1 day			

Sample Identification	Sample Date	Sample Time	Sample Type	Matrix	# of Cont.	Filtered Sample	TPHd EPA 8015B	VOCs + TPHg EPA 8260	Hold	Laboratory's Sample Specific Notes:
001A/B EB-20 (4.5-5)	4/4/18	12:57	Liner +CNO				X	X		
002A/B EB-20 (9.5-10)		12:57					X	X		
003A/B EB-20 (16-16.5)		13:00					X	X		
004A/B EB-20 (19.5-20)		13:01							X	
005A/B EB-18 (4.5-5)		13:27					X	X		
006A/B EB-18 (9.5-10)		13:30					X	X		
007A/B EB-18 (14.5-15)		13:35					X	X		
008A/B EB-18 (19.5-20)		13:40							X	
009A/B EB-22 (4.5-5)		14:01					X	X		
010A/B EB-22 (9.5-10)		14:04					X	X		
011A/B EB-22 (16-16.5)		14:08					X	X		
012A/B EB-22 (19.5-20)		14:12							X	

Preservation Used: 1= Ice, 2= HCl; 3= H2SO4; 4=HNO3; 5=NaOH; 6= Other _____

Possible Hazard Identification
☐ *Non-Hazard* ☐ *Flammable* ☐ *Skin Irritant* ☐ *Poison B* ☐ *Unknown*

Sample Disposal
☐ *Return To Client* ☐ *Disposal By Lab* ☐ *Archive For* _____ *Months*

Special Instructions/QC Requirements & Comments: If additional sample is needed, please use the liner.

Relinquished by:	Company:	Date/Time:	Received by:	Company:	Date/Time:
[signature]	Cornerstone Earth Group	4/4 16:15	Kathie [signature]	Torrent	4-4-18 16:15
Relinquished by:	Company:	Date/Time:	Received by:	Company:	Date/Time:
Relinquished by:	Company:	Date/Time:	Received by:	Company:	Date/Time:

2°C #2 D/OK

Torrent LABORATORY, INC.

CORNERSTONE EARTH GROUP

Chain of Custody Record

1804039

	Project Manager: Peter Langtry	Site Sampler: Sarah Kuehn	Date: 4/4/18	COC No:
Cornerstone Earth Group, Inc.	Tel/Fax: 408-245-4600 ext. 101	Lab Contact: Kathie	Lab: Torrent	4 of 4 COCs
1259 Oakmead Pkwy	Analysis Turnaround Time			Laboratory's Job No.
Sunnyvale, California 94085				
(408) 245-4600 Phone	TAT if different from Below _____			
(408) 245-4620 FAX	☐ 1 week			
Project Name: 1433-1493 El Camino Real	■ 3 days			
Site: Santa Clara, California	☐ 2 days			
Project Number: 958-1-5	☐ 1 day			

	Sample Identification	Sample Date	Sample Time	Sample Type	Matrix	# of Cont.	Filtered Sample	TPHd EPA 8015B	VOCs + TPHg EPA 8260	Hold	Laboratory's Sample Specific Notes:
013A/B	EB-23 (4.5-5)	4/4/18	11:38	Liner PCNG	Soil	4		X	X		
014A/B	EB-23 (9.5-10)	↓	14:41	↓	↓	↓		X	X		
015A/B	EB-23 (14.5-15)		14:45					X	X		
016A/B	EB-23 (19.5-20)		14:50							X	
017A/B	EB-21 (4.5-5)		15:06					X	X		
018A/B	EB-21 (9.5-10)		15:10					X	X		
019A/B	EB-21 (14.5-15)		15:12					X	X		
020A/B	EB-21 (19.5-20)	↓	15:15	↓	↓					X	

Preservation Used: 1= Ice, 2= HCl; 3= H2SO4; 4=HNO3; 5=NaOH; 6= Other _____

Possible Hazard Identification
☐ *Non-Hazard* ☐ *Flammable* ☐ *Skin Irritant* ☐ *Poison B* ☐ *Unknown*

Sample Disposal
☐ *Return To Client* ☐ *Disposal By Lab* ☐ *Archive For* _____ *Months*

Special Instructions/QC Requirements & Comments: If additional sample is needed, please use the liner.

Relinquished by:	Company:	Date/Time:	Received by:	Company:	Date/Time:
[signature]	Cornerstone Earth Group	4/4 16:15	Kathie [signature]	Torrent	4-4-18 16:15

2°C #2 D/OF

Torrent LABORATORY, INC.

Torrent LABORATORY, INC.

Change Order

Work Order: 1804039 **Serial #:** CO18-0164 **Print Date:** 4/10/2018

Project Name: 1433-1493 El Camino Real

Client: Cornerstone Earth Group **Requested By:** Peter Langtry

	Requested Date	Requested Time	Extended Price
Samples Off Hold--Analyze 004/1012 for TPHg/VOCs; 3 day STD TAT	4/10/2018	11:30:00AM	

Page 1 of 1

483 Sinclair Frontage Rd., Milpitas, CA 95035 | *tel:* 408.263.5258 | *fax:* 408.263.8293 | www.torrentlab.com

Cornerstone Earth Group
1259 Oakmead Parkway
Sunnyvale, California 94035
Tel: (408) 245-4600
Fax: (408) 245-4620

RE: 1433-1493 El Camino Real

Work Order No.: 1804038 Rev: 1

Dear Peter Langtry:

Torrent Laboratory, Inc. received 20 sample(s) on April 04, 2018 for the analyses presented in the following Report.

As requested on the Chain of Custody, five samples were placed on hold.

All data for associated QC met EPA or laboratory specification(s) except where noted in the case narrative.

Torrent Laboratory, Inc. is certified by the State of California, ELAP #1991. If you have any questions regarding these test results, please feel free to contact the Project Management Team at (408)263-5258; ext 204.

Patti L Sandrock
QA Officer

April 09, 2018
Date

Date: 4/9/2018

Client: Cornerstone Earth Group

Project: 1433-1493 El Camino Real

Work Order: 1804038

CASE NARRATIVE

No issues encountered with the receiving, preparation, analysis or reporting of the results associated with this work order.

Unless otherwise indicated in the following narrative, no results have been method and/or field blank corrected.

Reported results relate only to the items/samples tested by the laboratory.

This report shall not be reproduced, except in full, without the written approval of Torrent Analytical, Inc.

Note: for 8260B/GCMS-GRO: Final result & MDL/PQL (Detection Limit/Reporting limit) have been corrected for actual mass removed from the Encore container.

REVISIONS

Report revised to include data for sample 020A.

Rev. 1 (4/13/18)

Sample Result Summary

Report prepared for: Peter Langtry
Cornerstone Earth Group

Date Received: 04/04/18
Date Reported: 04/09/18

EB-14 (20-20.5) 1804038-001

Parameters:	Analysis Method	DF	MDL	PQL	Results	Unit
TPH(Gasoline)	8260TPH	1	49	110	3040	ug/Kg
TPH as Diesel	SW8015B	1	0.85	2.0	7.02	mg/Kg
Isopropyl Benzene	SW8260B	1	1.8	11	32.7	ug/Kg
n-Propylbenzene	SW8260B	1	1.8	11	124	ug/Kg
n-Butylbenzene	SW8260B	1	1.7	11	15.4	ug/Kg
Naphthalene	SW8260B	1	1.9	11	37.0	ug/Kg

EB-14 (25.5-26) 1804038-002

Parameters:	Analysis Method	DF	MDL	PQL	Results	Unit
TPH(Gasoline)	8260TPH	2000	83000	190000	4060000	ug/Kg
TPH as Diesel	SW8015B	1	0.85	2.0	18.6	mg/Kg
m,p-Xylene	SW8260B	2000	6100	19000	221000	ug/Kg
n-Propylbenzene	SW8260B	2000	3000	19000	38000	ug/Kg
1,3,5-Trimethylbenzene	SW8260B	2000	3000	19000	48800	ug/Kg
1,2,4-Trimethylbenzene	SW8260B	2000	2600	19000	158000	ug/Kg

EB-14 (29.5-30) 1804038-003

Parameters:	Analysis Method	DF	MDL	PQL	Results	Unit
TPH(Gasoline)	8260TPH	100	4100	9600	241000	ug/Kg
TPH as Diesel	SW8015B	1	0.85	2.0	15.9	mg/Kg
tert-Butanol	SW8260B	100	1100	4800	5350	ug/Kg
Benzene	SW8260B	100	210	960	1490	ug/Kg
Ethyl Benzene	SW8260B	100	160	960	4790	ug/Kg
m,p-Xylene	SW8260B	100	300	960	17200	ug/Kg
o-Xylene	SW8260B	100	170	960	5400	ug/Kg
n-Propylbenzene	SW8260B	100	150	960	2230	ug/Kg
1,3,5-Trimethylbenzene	SW8260B	100	150	960	3030	ug/Kg
1,2,4-Trimethylbenzene	SW8260B	100	130	960	11000	ug/Kg
Naphthalene	SW8260B	100	160	960	2620	ug/Kg

EB-15 (4.5-5) 1804038-004

Parameters:	Analysis Method	DF	MDL	PQL	Results	Unit
TPH as Diesel	SW8015B	1	0.85	2.0	2.84	mg/Kg
tert-Butanol	SW8260B	1	13	58	406	ug/Kg

Sample Result Summary

Report prepared for: Peter Langtry
Cornerstone Earth Group

Date Received: 04/04/18
Date Reported: 04/09/18

EB-15 (9.5-10) 1804038-005

Parameters:	Analysis Method	DF	MDL	PQL	Results	Unit
TPH(Gasoline)	8260TPH	5000	260000	600000	13000000	ug/Kg
TPH as Diesel	SW8015B	1	0.85	2.0	27.0	mg/Kg
m,p-Xylene	SW8260B	5000	19000	60000	343000	ug/Kg
o-Xylene	SW8260B	5000	10000	60000	136000	ug/Kg
n-Propylbenzene	SW8260B	5000	9400	60000	149000	ug/Kg
1,3,5-Trimethylbenzene	SW8260B	5000	9500	60000	204000	ug/Kg
1,2,4-Trimethylbenzene	SW8260B	5000	8200	60000	718000	ug/Kg

EB-15 (14.5-15) 1804038-006

Parameters:	Analysis Method	DF	MDL	PQL	Results	Unit
TPH as Diesel	SW8015B	1	0.85	2.0	3.07	mg/Kg
tert-Butanol	SW8260B	1	12	54	244	ug/Kg

EB-16 (4.5-5) 1804038-008

Parameters:	Analysis Method	DF	MDL	PQL	Results	Unit
TPH as Diesel	SW8015B	1	0.85	2.0	4.61	mg/Kg
tert-Butanol	SW8260B	1	12	53	206	ug/Kg

EB-16 (9.5-10) 1804038-009

Parameters:	Analysis Method	DF	MDL	PQL	Results	Unit
tert-Butanol	SW8260B	1	12	53	215	ug/Kg

EB-16 (14.5-15) 1804038-010

Parameters:	Analysis Method	DF	MDL	PQL	Results	Unit
TPH as Diesel	SW8015B	1	0.85	2.0	13.8	mg/Kg

EB-17 (4.5-5) 1804038-012

Parameters:	Analysis Method	DF	MDL	PQL	Results	Unit
TPH as Diesel	SW8015B	1	0.85	2.0	2.33	mg/Kg
tert-Butanol	SW8260B	1	12	50	498	ug/Kg

EB-17 (9.5-10) 1804038-013

Parameters:	Analysis Method	DF	MDL	PQL	Results	Unit
TPH as Diesel	SW8015B	1	0.85	2.0	2.21	mg/Kg
tert-Butanol	SW8260B	1	14	58	174	ug/Kg

Sample Result Summary

Report prepared for: Peter Langtry
Cornerstone Earth Group

Date Received: 04/04/18
Date Reported: 04/09/18

EB-17 (14.5-15) 1804038-014

Parameters:	Analysis Method	DF	MDL	PQL	Results	Unit
TPH(Gasoline)	8260TPH	1	46	110	947	ug/Kg
TPH as Diesel	SW8015B	1	0.85	2.0	35.1	mg/Kg
tert-Butanol	SW8260B	1	12	53	53.5	ug/Kg

EB-19 (4.5-5) 1804038-017

Parameters:	Analysis Method	DF	MDL	PQL	Results	Unit
tert-Butanol	SW8260B	1	13	57	332	ug/Kg

EB-19 (9.5-10) 1804038-018

Parameters:	Analysis Method	DF	MDL	PQL	Results	Unit
tert-Butanol	SW8260B	1	15	66	122	ug/Kg

EB-19 (16.5-17) 1804038-019

Parameters:	Analysis Method	DF	MDL	PQL	Results	Unit
TPH(Gasoline)	8260TPH	100	4100	9500	316000	ug/Kg
TPH as Diesel	SW8015B	1	0.85	2.0	42.5	mg/Kg
Ethyl Benzene	SW8260B	100	160	950	6050	ug/Kg
m,p-Xylene	SW8260B	100	300	950	14300	ug/Kg
o-Xylene	SW8260B	100	160	950	6120	ug/Kg
Isopropyl Benzene	SW8260B	100	150	950	1030	ug/Kg
n-Propylbenzene	SW8260B	100	150	950	3210	ug/Kg
1,3,5-Trimethylbenzene	SW8260B	100	150	950	4390	ug/Kg
1,2,4-Trimethylbenzene	SW8260B	100	130	950	15500	ug/Kg
Naphthalene	SW8260B	100	160	950	2710	ug/Kg

EB-19 (19.5-20) 1804038-020

Parameters:	Analysis Method	DF	MDL	PQL	Results	Unit
TPH(Gasoline)	8260TPH	100	5700	13000	20200	ug/Kg
Ethyl Benzene	SW8260B	100	220	1300	2250	ug/Kg
m,p-Xylene	SW8260B	100	410	1300	8670	ug/Kg
o-Xylene	SW8260B	100	230	1300	3790	ug/Kg
1,3,5-Trimethylbenzene	SW8260B	100	210	1300	1820	ug/Kg
1,2,4-Trimethylbenzene	SW8260B	100	180	1300	1910	ug/Kg

Torrent LABORATORY, INC.

SAMPLE RESULTS

Report prepared for: Peter Langtry
Cornerstone Earth Group

Date/Time Received: 04/04/18, 4:15 pm
Date Reported: 04/09/18

Client Sample ID:	EB-14 (20-20.5)	**Lab Sample ID:**	1804038-001A
Project Name/Location:	1433-1493 El Camino Real	**Sample Matrix:**	Soil
Project Number:	958-1-5		
Date/Time Sampled:	04/04/18 / 8:57		
SDG:			

Prep Method:	3546_TPH	**Prep Batch Date/Time:**	4/4/18 3:18:00PM
Prep Batch ID:	1103958	**Prep Analyst:**	SNARASIMHAN

Parameters:	Analysis Method	DF	MDL	PQL	Results	Q	Units	Analyzed	Time	By	Analytical Batch
TPH as Diesel	SW8015B	1	0.85	2.0	**7.02**	x	mg/Kg	04/06/18	10:19	mk	430765
			Acceptance Limits								
Pentacosane (S)	SW8015B		59 - 129		**115**		%	04/06/18	10:19	mk	430765

NOTE: x- Chromatographic pattern does not resemble typical diesel reference standard; unknown organics within diesel range lighter than diesel quantified as diesel.

Torrent LABORATORY, INC.

SAMPLE RESULTS

Report prepared for: Peter Langtry
Cornerstone Earth Group

Date/Time Received: 04/04/18, 4:15 pm
Date Reported: 04/09/18

Client Sample ID:	EB-14 (20-20.5)	**Lab Sample ID:**	1804038-001B
Project Name/Location:	1433-1493 El Camino Real	**Sample Matrix:**	Soil
Project Number:	958-1-5		
Date/Time Sampled:	04/04/18 / 8:57		
SDG:			

Prep Method:	5035	**Prep Batch Date/Time:**	4/5/18	12:01:00PM
Prep Batch ID:	1104009	**Prep Analyst:**	BALI	

Parameters:	Analysis Method	DF	MDL	PQL	Results	Q	Units	Analyzed	Time	By	Analytical Batch
Dichlorodifluoromethane	SW8260B	1	1.4	11	ND		ug/Kg	04/05/18	20:17	NP	430772
Chloromethane	SW8260B	1	2.1	11	ND		ug/Kg	04/05/18	20:17	NP	430772
Vinyl Chloride	SW8260B	1	2.3	11	ND		ug/Kg	04/05/18	20:17	NP	430772
Bromomethane	SW8260B	1	3.1	11	ND		ug/Kg	04/05/18	20:17	NP	430772
Chloroethane	SW8260B	1	3.5	11	ND		ug/Kg	04/05/18	20:17	NP	430772
Trichlorofluoromethane	SW8260B	1	2.4	11	ND		ug/Kg	04/05/18	20:17	NP	430772
1,1-Dichloroethene	SW8260B	1	2.3	11	ND		ug/Kg	04/05/18	20:17	NP	430772
Freon 113	SW8260B	1	2.1	11	ND		ug/Kg	04/05/18	20:17	NP	430772
Methylene Chloride	SW8260B	1	8.1	11	ND		ug/Kg	04/05/18	20:17	NP	430772
trans-1,2-Dichloroethene	SW8260B	1	2.4	11	ND		ug/Kg	04/05/18	20:17	NP	430772
MTBE	SW8260B	1	2.7	11	ND		ug/Kg	04/05/18	20:17	NP	430772
tert-Butanol	SW8260B	1	13	57	ND		ug/Kg	04/05/18	20:17	NP	430772
Diisopropyl ether (DIPE)	SW8260B	1	2.6	11	ND		ug/Kg	04/05/18	20:17	NP	430772
1,1-Dichloroethane	SW8260B	1	2.5	11	ND		ug/Kg	04/05/18	20:17	NP	430772
ETBE	SW8260B	1	2.6	11	ND		ug/Kg	04/05/18	20:17	NP	430772
cis-1,2-Dichloroethene	SW8260B	1	2.5	11	ND		ug/Kg	04/05/18	20:17	NP	430772
2,2-Dichloropropane	SW8260B	1	2.2	11	ND		ug/Kg	04/05/18	20:17	NP	430772
Bromochloromethane	SW8260B	1	2.7	11	ND		ug/Kg	04/05/18	20:17	NP	430772
Chloroform	SW8260B	1	2.7	11	ND		ug/Kg	04/05/18	20:17	NP	430772
Carbon Tetrachloride	SW8260B	1	2.3	11	ND		ug/Kg	04/05/18	20:17	NP	430772
1,1,1-Trichloroethane	SW8260B	1	2.4	11	ND		ug/Kg	04/05/18	20:17	NP	430772
1,1-Dichloropropene	SW8260B	1	2.3	11	ND		ug/Kg	04/05/18	20:17	NP	430772
Benzene	SW8260B	1	2.5	11	ND		ug/Kg	04/05/18	20:17	NP	430772
TAME	SW8260B	1	2.6	11	ND		ug/Kg	04/05/18	20:17	NP	430772
1,2-Dichloroethane	SW8260B	1	2.7	11	ND		ug/Kg	04/05/18	20:17	NP	430772
Trichloroethylene	SW8260B	1	2.1	11	ND		ug/Kg	04/05/18	20:17	NP	430772
Dibromomethane	SW8260B	1	2.1	11	ND		ug/Kg	04/05/18	20:17	NP	430772
1,2-Dichloropropane	SW8260B	1	2.1	11	ND		ug/Kg	04/05/18	20:17	NP	430772
Bromodichloromethane	SW8260B	1	2.3	11	ND		ug/Kg	04/05/18	20:17	NP	430772
cis-1,3-Dichloropropene	SW8260B	1	1.8	11	ND		ug/Kg	04/05/18	20:17	NP	430772
Toluene	SW8260B	1	2.1	11	ND		ug/Kg	04/05/18	20:17	NP	430772
Tetrachloroethylene	SW8260B	1	1.9	11	ND		ug/Kg	04/05/18	20:17	NP	430772
trans-1,3-Dichloropropene	SW8260B	1	1.9	11	ND		ug/Kg	04/05/18	20:17	NP	430772
1,1,2-Trichloroethane	SW8260B	1	2.1	11	ND		ug/Kg	04/05/18	20:17	NP	430772
Dibromochloromethane	SW8260B	1	2.1	11	ND		ug/Kg	04/05/18	20:17	NP	430772
1,3-Dichloropropane	SW8260B	1	2.1	11	ND		ug/Kg	04/05/18	20:17	NP	430772

Torrent LABORATORY, INC.

SAMPLE RESULTS

Report prepared for: Peter Langtry
Cornerstone Earth Group

Date/Time Received: 04/04/18, 4:15 pm
Date Reported: 04/09/18

Client Sample ID:	EB-14 (20-20.5)	**Lab Sample ID:**	1804038-001B
Project Name/Location:	1433-1493 El Camino Real	**Sample Matrix:**	Soil
Project Number:	958-1-5		
Date/Time Sampled:	04/04/18 / 8:57		
SDG:			

Prep Method:	5035	**Prep Batch Date/Time:**	4/5/18	12:01:00PM
Prep Batch ID:	1104009	**Prep Analyst:**	BALI	

Parameters:	Analysis Method	DF	MDL	PQL	Results	Q	Units	Analyzed	Time	By	Analytical Batch
1,2-Dibromoethane	SW8260B	1	2.1	11	ND		ug/Kg	04/05/18	20:17	NP	430772
Chlorobenzene	SW8260B	1	2.1	11	ND		ug/Kg	04/05/18	20:17	NP	430772
Ethyl Benzene	SW8260B	1	1.9	11	ND		ug/Kg	04/05/18	20:17	NP	430772
1,1,1,2-Tetrachloroethane	SW8260B	1	2.2	11	ND		ug/Kg	04/05/18	20:17	NP	430772
m,p-Xylene	SW8260B	1	3.6	11	ND		ug/Kg	04/05/18	20:17	NP	430772
o-Xylene	SW8260B	1	2.0	11	ND		ug/Kg	04/05/18	20:17	NP	430772
Styrene	SW8260B	1	1.9	11	ND		ug/Kg	04/05/18	20:17	NP	430772
Bromoform	SW8260B	1	1.9	11	ND		ug/Kg	04/05/18	20:17	NP	430772
Isopropyl Benzene	SW8260B	1	1.8	11	**32.7**		ug/Kg	04/05/18	20:17	NP	430772
n-Propylbenzene	SW8260B	1	1.8	11	**124**		ug/Kg	04/05/18	20:17	NP	430772
Bromobenzene	SW8260B	1	2.0	11	ND		ug/Kg	04/05/18	20:17	NP	430772
1,1,2,2-Tetrachloroethane	SW8260B	1	2.2	11	ND		ug/Kg	04/05/18	20:17	NP	430772
2-Chlorotoluene	SW8260B	1	2.0	11	ND		ug/Kg	04/05/18	20:17	NP	430772
1,3,5-Trimethylbenzene	SW8260B	1	1.8	11	ND		ug/Kg	04/05/18	20:17	NP	430772
1,2,3-Trichloropropane	SW8260B	1	2.2	11	ND		ug/Kg	04/05/18	20:17	NP	430772
4-Chlorotoluene	SW8260B	1	1.9	11	ND		ug/Kg	04/05/18	20:17	NP	430772
tert-Butylbenzene	SW8260B	1	1.9	11	ND		ug/Kg	04/05/18	20:17	NP	430772
1,2,4-Trimethylbenzene	SW8260B	1	1.6	11	ND		ug/Kg	04/05/18	20:17	NP	430772
sec-Butyl Benzene	SW8260B	1	1.8	11	ND		ug/Kg	04/05/18	20:17	NP	430772
p-Isopropyltoluene	SW8260B	1	1.7	11	ND		ug/Kg	04/05/18	20:17	NP	430772
1,3-Dichlorobenzene	SW8260B	1	1.9	11	ND		ug/Kg	04/05/18	20:17	NP	430772
1,4-Dichlorobenzene	SW8260B	1	2.0	11	ND		ug/Kg	04/05/18	20:17	NP	430772
n-Butylbenzene	SW8260B	1	1.7	11	**15.4**		ug/Kg	04/05/18	20:17	NP	430772
1,2-Dichlorobenzene	SW8260B	1	2.0	11	ND		ug/Kg	04/05/18	20:17	NP	430772
1,2-Dibromo-3-Chloropropane	SW8260B	1	2.1	11	ND		ug/Kg	04/05/18	20:17	NP	430772
Hexachlorobutadiene	SW8260B	1	1.6	11	ND		ug/Kg	04/05/18	20:17	NP	430772
1,2,4-Trichlorobenzene	SW8260B	1	1.7	11	ND		ug/Kg	04/05/18	20:17	NP	430772
Naphthalene	SW8260B	1	1.9	11	**37.0**		ug/Kg	04/05/18	20:17	NP	430772
1,2,3-Trichlorobenzene	SW8260B	1	1.9	11	ND		ug/Kg	04/05/18	20:17	NP	430772
2-Butanone	SW8260B	1	2.6	11	ND		ug/Kg	04/05/18	20:17	NP	430772
(S) Dibromofluoromethane	SW8260B		59.8 - 148		**89.9**		%	04/05/18	20:17	NP	430772
(S) Toluene-d8	SW8260B		55.2 - 133		**97.1**		%	04/05/18	20:17	NP	430772
(S) 4-Bromofluorobenzene	SW8260B		55.8 - 141		**111**		%	04/05/18	20:17	NP	430772

Prep Method:	5035GRO	**Prep Batch Date/Time:**	4/5/18	12:47:00PM
Prep Batch ID:	1104010	**Prep Analyst:**	BALI	

Torrent LABORATORY, INC.

SAMPLE RESULTS

Report prepared for: Peter Langtry
Cornerstone Earth Group

Date/Time Received: 04/04/18, 4:15 pm
Date Reported: 04/09/18

Client Sample ID:	EB-14 (20-20.5)	**Lab Sample ID:**	1804038-001B
Project Name/Location:	1433-1493 El Camino Real	**Sample Matrix:**	Soil
Project Number:	958-1-5		
Date/Time Sampled:	04/04/18 / 8:57		
SDG:			

Prep Method:	5035GRO	**Prep Batch Date/Time:**	4/5/18	12:47:00PM
Prep Batch ID:	1104010	**Prep Analyst:**	BALI	

Parameters:	Analysis Method	DF	MDL	PQL	Results	Q	Units	Analyzed	Time	By	Analytical Batch
TPH(Gasoline)	8260TPH	1	49	110	**3040**	x	ug/Kg	04/05/18	20:17	NP	430772
(S) 4-Bromofluorobenzene	8260TPH		43.9 - 127		**113**		%	04/05/18	20:17	NP	430772

NOTE: x- Sample chromatogram does not resemble gasoline standard pattern. Reported value due to presence of heavy end non-gasoline compounds within range of C5-C12 quantified as Gasoline.

Torrent LABORATORY, INC.

SAMPLE RESULTS

Report prepared for: Peter Langtry
Cornerstone Earth Group

Date/Time Received: 04/04/18, 4:15 pm
Date Reported: 04/09/18

Client Sample ID:	EB-14 (25.5-26)	**Lab Sample ID:**	1804038-002A
Project Name/Location:	1433-1493 El Camino Real	**Sample Matrix:**	Soil
Project Number:	958-1-5		
Date/Time Sampled:	04/04/18 / 9:01		
SDG:			

Prep Method:	3546_TPH	**Prep Batch Date/Time:**	4/4/18 3:18:00PM
Prep Batch ID:	1103958	**Prep Analyst:**	SNARASIMHAN

Parameters:	Analysis Method	DF	MDL	PQL	Results	Q	Units	Analyzed	Time	By	Analytical Batch
TPH as Diesel	SW8015B	1	0.85	2.0	**18.6**	x	mg/Kg	04/06/18	1:38	mk	430765
			Acceptance Limits								
Pentacosane (S)	SW8015B		59 - 129		**105**		%	04/06/18	1:38	mk	430765

NOTE: x- Chromatographic pattern does not resemble typical diesel reference standard; unknown organics within diesel range quantified as diesel.

Torrent LABORATORY, INC.

SAMPLE RESULTS

Report prepared for: Peter Langtry
Cornerstone Earth Group

Date/Time Received: 04/04/18, 4:15 pm
Date Reported: 04/09/18

Client Sample ID:	EB-14 (25.5-26)	**Lab Sample ID:**	1804038-002B
Project Name/Location:	1433-1493 El Camino Real	**Sample Matrix:**	Soil
Project Number:	958-1-5		
Date/Time Sampled:	04/04/18 / 9:01		
SDG:			

Prep Method:	5035	**Prep Batch Date/Time:**	4/9/18	9:22:00AM
Prep Batch ID:	1104109	**Prep Analyst:**	NPAR	

Parameters:	Analysis Method	DF	MDL	PQL	Results	Q	Units	Analyzed	Time	By	Analytical Batch
Dichlorodifluoromethane	SW8260B	2000	2400	19000	ND		ug/Kg	04/09/18	18:02	NP	430855
Chloromethane	SW8260B	2000	3500	19000	ND		ug/Kg	04/09/18	18:02	NP	430855
Vinyl Chloride	SW8260B	2000	4000	19000	ND		ug/Kg	04/09/18	18:02	NP	430855
Bromomethane	SW8260B	2000	5200	19000	ND		ug/Kg	04/09/18	18:02	NP	430855
Chloroethane	SW8260B	2000	5800	19000	ND		ug/Kg	04/09/18	18:02	NP	430855
Trichlorofluoromethane	SW8260B	2000	4000	19000	ND		ug/Kg	04/09/18	18:02	NP	430855
1,1-Dichloroethene	SW8260B	2000	3900	19000	ND		ug/Kg	04/09/18	18:02	NP	430855
Freon 113	SW8260B	2000	3600	19000	ND		ug/Kg	04/09/18	18:02	NP	430855
Methylene Chloride	SW8260B	2000	14000	19000	ND		ug/Kg	04/09/18	18:02	NP	430855
trans-1,2-Dichloroethene	SW8260B	2000	4000	19000	ND		ug/Kg	04/09/18	18:02	NP	430855
MTBE	SW8260B	2000	4500	19000	ND		ug/Kg	04/09/18	18:02	NP	430855
tert-Butanol	SW8260B	2000	22000	97000	ND		ug/Kg	04/09/18	18:02	NP	430855
Diisopropyl ether (DIPE)	SW8260B	2000	4400	19000	ND		ug/Kg	04/09/18	18:02	NP	430855
1,1-Dichloroethane	SW8260B	2000	4300	19000	ND		ug/Kg	04/09/18	18:02	NP	430855
ETBE	SW8260B	2000	4400	19000	ND		ug/Kg	04/09/18	18:02	NP	430855
cis-1,2-Dichloroethene	SW8260B	2000	4300	19000	ND		ug/Kg	04/09/18	18:02	NP	430855
2,2-Dichloropropane	SW8260B	2000	3700	19000	ND		ug/Kg	04/09/18	18:02	NP	430855
Bromochloromethane	SW8260B	2000	4500	19000	ND		ug/Kg	04/09/18	18:02	NP	430855
Chloroform	SW8260B	2000	4600	19000	ND		ug/Kg	04/09/18	18:02	NP	430855
Carbon Tetrachloride	SW8260B	2000	4000	19000	ND		ug/Kg	04/09/18	18:02	NP	430855
1,1,1-Trichloroethane	SW8260B	2000	4000	19000	ND		ug/Kg	04/09/18	18:02	NP	430855
1,1-Dichloropropene	SW8260B	2000	3800	19000	ND		ug/Kg	04/09/18	18:02	NP	430855
Benzene	SW8260B	2000	4300	19000	ND		ug/Kg	04/09/18	18:02	NP	430855
TAME	SW8260B	2000	4400	19000	ND		ug/Kg	04/09/18	18:02	NP	430855
1,2-Dichloroethane	SW8260B	2000	4500	19000	ND		ug/Kg	04/09/18	18:02	NP	430855
Trichloroethylene	SW8260B	2000	3500	19000	ND		ug/Kg	04/09/18	18:02	NP	430855
Dibromomethane	SW8260B	2000	3500	19000	ND		ug/Kg	04/09/18	18:02	NP	430855
1,2-Dichloropropane	SW8260B	2000	3600	19000	ND		ug/Kg	04/09/18	18:02	NP	430855
Bromodichloromethane	SW8260B	2000	3800	19000	ND		ug/Kg	04/09/18	18:02	NP	430855
cis-1,3-Dichloropropene	SW8260B	2000	3100	19000	ND		ug/Kg	04/09/18	18:02	NP	430855
Toluene	SW8260B	2000	3500	19000	ND		ug/Kg	04/09/18	18:02	NP	430855
Tetrachloroethylene	SW8260B	2000	3200	19000	ND		ug/Kg	04/09/18	18:02	NP	430855
trans-1,3-Dichloropropene	SW8260B	2000	3200	19000	ND		ug/Kg	04/09/18	18:02	NP	430855
1,1,2-Trichloroethane	SW8260B	2000	3500	19000	ND		ug/Kg	04/09/18	18:02	NP	430855
Dibromochloromethane	SW8260B	2000	3600	19000	ND		ug/Kg	04/09/18	18:02	NP	430855
1,3-Dichloropropane	SW8260B	2000	3500	19000	ND		ug/Kg	04/09/18	18:02	NP	430855

Torrent LABORATORY, INC.

SAMPLE RESULTS

Report prepared for: Peter Langtry
Cornerstone Earth Group

Date/Time Received: 04/04/18, 4:15 pm
Date Reported: 04/09/18

Client Sample ID:	EB-14 (25.5-26)	**Lab Sample ID:**	1804038-002B
Project Name/Location:	1433-1493 El Camino Real	**Sample Matrix:**	Soil
Project Number:	958-1-5		
Date/Time Sampled:	04/04/18 / 9:01		
SDG:			

Prep Method:	5035	**Prep Batch Date/Time:**	4/9/18	9:22:00AM
Prep Batch ID:	1104109	**Prep Analyst:**	NPAR	

Parameters:	Analysis Method	DF	MDL	PQL	Results	Q	Units	Analyzed	Time	By	Analytical Batch
1,2-Dibromoethane	SW8260B	2000	3500	19000	ND		ug/Kg	04/09/18	18:02	NP	430855
Chlorobenzene	SW8260B	2000	3500	19000	ND		ug/Kg	04/09/18	18:02	NP	430855
Ethyl Benzene	SW8260B	2000	3200	19000	ND		ug/Kg	04/09/18	18:02	NP	430855
1,1,1,2-Tetrachloroethane	SW8260B	2000	3700	19000	ND		ug/Kg	04/09/18	18:02	NP	430855
m,p-Xylene	SW8260B	2000	6100	19000	**221000**		ug/Kg	04/09/18	18:02	NP	430855
o-Xylene	SW8260B	2000	3300	19000	ND		ug/Kg	04/09/18	18:02	NP	430855
Styrene	SW8260B	2000	3200	19000	ND		ug/Kg	04/09/18	18:02	NP	430855
Bromoform	SW8260B	2000	3200	19000	ND		ug/Kg	04/09/18	18:02	NP	430855
Isopropyl Benzene	SW8260B	2000	3100	19000	ND		ug/Kg	04/09/18	18:02	NP	430855
n-Propylbenzene	SW8260B	2000	3000	19000	**38000**		ug/Kg	04/09/18	18:02	NP	430855
Bromobenzene	SW8260B	2000	3400	19000	ND		ug/Kg	04/09/18	18:02	NP	430855
1,1,2,2-Tetrachloroethane	SW8260B	2000	3700	19000	ND		ug/Kg	04/09/18	18:02	NP	430855
2-Chlorotoluene	SW8260B	2000	3400	19000	ND		ug/Kg	04/09/18	18:02	NP	430855
1,3,5-Trimethylbenzene	SW8260B	2000	3000	19000	**48800**		ug/Kg	04/09/18	18:02	NP	430855
1,2,3-Trichloropropane	SW8260B	2000	3700	19000	ND		ug/Kg	04/09/18	18:02	NP	430855
4-Chlorotoluene	SW8260B	2000	3200	19000	ND		ug/Kg	04/09/18	18:02	NP	430855
tert-Butylbenzene	SW8260B	2000	3100	19000	ND		ug/Kg	04/09/18	18:02	NP	430855
1,2,4-Trimethylbenzene	SW8260B	2000	2600	19000	**158000**		ug/Kg	04/09/18	18:02	NP	430855
sec-Butyl Benzene	SW8260B	2000	3000	19000	ND		ug/Kg	04/09/18	18:02	NP	430855
p-Isopropyltoluene	SW8260B	2000	2800	19000	ND		ug/Kg	04/09/18	18:02	NP	430855
1,3-Dichlorobenzene	SW8260B	2000	3200	19000	ND		ug/Kg	04/09/18	18:02	NP	430855
1,4-Dichlorobenzene	SW8260B	2000	3300	19000	ND		ug/Kg	04/09/18	18:02	NP	430855
n-Butylbenzene	SW8260B	2000	2800	19000	ND		ug/Kg	04/09/18	18:02	NP	430855
1,2-Dichlorobenzene	SW8260B	2000	3400	19000	ND		ug/Kg	04/09/18	18:02	NP	430855
1,2-Dibromo-3-Chloropropane	SW8260B	2000	3600	19000	ND		ug/Kg	04/09/18	18:02	NP	430855
Hexachlorobutadiene	SW8260B	2000	2600	19000	ND		ug/Kg	04/09/18	18:02	NP	430855
1,2,4-Trichlorobenzene	SW8260B	2000	2800	19000	ND		ug/Kg	04/09/18	18:02	NP	430855
Naphthalene	SW8260B	2000	3200	19000	ND		ug/Kg	04/09/18	18:02	NP	430855
1,2,3-Trichlorobenzene	SW8260B	2000	3200	19000	ND		ug/Kg	04/09/18	18:02	NP	430855
2-Butanone	SW8260B	2000	4400	19000	ND		ug/Kg	04/09/18	18:02	NP	430855
(S) Dibromofluoromethane	SW8260B		59.8 - 148		**106**		%	04/09/18	18:02	NP	430855
(S) Toluene-d8	SW8260B		55.2 - 133		**104**		%	04/09/18	18:02	NP	430855
(S) 4-Bromofluorobenzene	SW8260B		55.8 - 141		**104**		%	04/09/18	18:02	NP	430855

Prep Method:	5035GRO	**Prep Batch Date/Time:**	4/9/18	9:22:00AM
Prep Batch ID:	1104111	**Prep Analyst:**	NPAR	

Torrent LABORATORY, INC.

SAMPLE RESULTS

Report prepared for: Peter Langtry
Cornerstone Earth Group

Date/Time Received: 04/04/18, 4:15 pm
Date Reported: 04/09/18

Client Sample ID:	EB-14 (25.5-26)	**Lab Sample ID:**	1804038-002B
Project Name/Location:	1433-1493 El Camino Real	**Sample Matrix:**	Soil
Project Number:	958-1-5		
Date/Time Sampled:	04/04/18 / 9:01		
SDG:			

Prep Method:	5035GRO	**Prep Batch Date/Time:**	4/9/18	9:22:00AM
Prep Batch ID:	1104111	**Prep Analyst:**	NPAR	

Parameters:	Analysis Method	DF	MDL	PQL	Results	Q	Units	Analyzed	Time	By	Analytical Batch
TPH(Gasoline)	8260TPH	2000	83000	190000	**4060000**	x	ug/Kg	04/09/18	18:02	NP	430855
(S) 4-Bromofluorobenzene	8260TPH		43.9 - 127		**111**		%	04/09/18	18:02	NP	430855

NOTE: x - Although some TPH as Gasoline constituents are present, th sample pattern does not match pattern of reference Gasoline standard. Result is elevated due to contribution from heavy end hydrocarbons within C5-C12 range quantified as Gasoline.

Torrent LABORATORY, INC.

SAMPLE RESULTS

Report prepared for: Peter Langtry
Cornerstone Earth Group

Date/Time Received: 04/04/18, 4:15 pm
Date Reported: 04/09/18

Client Sample ID:	EB-14 (29.5-30)	**Lab Sample ID:**	1804038-003A
Project Name/Location:	1433-1493 El Camino Real	**Sample Matrix:**	Soil
Project Number:	958-1-5		
Date/Time Sampled:	04/04/18 / 9:05		
SDG:			

Prep Method:	3546_TPH	**Prep Batch Date/Time:**	4/4/18 3:18:00PM
Prep Batch ID:	1103958	**Prep Analyst:**	SNARASIMHAN

Parameters:	Analysis Method	DF	MDL	PQL	Results	Q	Units	Analyzed	Time	By	Analytical Batch
TPH as Diesel	SW8015B	1	0.85	2.0	**15.9**	x	mg/Kg	04/06/18	2:02	mk	430765
			Acceptance Limits								
Pentacosane (S)	SW8015B		59 - 129		**96.8**		%	04/06/18	2:02	mk	430765

NOTE: x- Chromatographic pattern does not resemble typical diesel reference standard; unknown organics within diesel range lighter than diesel quantified as diesel.

Torrent LABORATORY, INC.

SAMPLE RESULTS

Report prepared for: Peter Langtry
Cornerstone Earth Group

Date/Time Received: 04/04/18, 4:15 pm
Date Reported: 04/09/18

Client Sample ID:	EB-14 (29.5-30)	**Lab Sample ID:**	1804038-003B
Project Name/Location:	1433-1493 El Camino Real	**Sample Matrix:**	Soil
Project Number:	958-1-5		
Date/Time Sampled:	04/04/18 / 9:05		
SDG:			

Prep Method:	5035	**Prep Batch Date/Time:**	4/6/18	8:22:00PM
Prep Batch ID:	1104076	**Prep Analyst:**	NPAR	

Parameters:	Analysis Method	DF	MDL	PQL	Results	Q	Units	Analyzed	Time	By	Analytical Batch
Dichlorodifluoromethane	SW8260B	100	120	960	ND		ug/Kg	04/07/18	3:37	NP	430824
Chloromethane	SW8260B	100	170	960	ND		ug/Kg	04/07/18	3:37	NP	430824
Vinyl Chloride	SW8260B	100	200	960	ND		ug/Kg	04/07/18	3:37	NP	430824
Bromomethane	SW8260B	100	260	960	ND		ug/Kg	04/07/18	3:37	NP	430824
Chloroethane	SW8260B	100	290	960	ND		ug/Kg	04/07/18	3:37	NP	430824
Trichlorofluoromethane	SW8260B	100	200	960	ND		ug/Kg	04/07/18	3:37	NP	430824
1,1-Dichloroethene	SW8260B	100	190	960	ND		ug/Kg	04/07/18	3:37	NP	430824
Freon 113	SW8260B	100	180	960	ND		ug/Kg	04/07/18	3:37	NP	430824
Methylene Chloride	SW8260B	100	680	960	ND		ug/Kg	04/07/18	3:37	NP	430824
trans-1,2-Dichloroethene	SW8260B	100	200	960	ND		ug/Kg	04/07/18	3:37	NP	430824
MTBE	SW8260B	100	220	960	ND		ug/Kg	04/07/18	3:37	NP	430824
tert-Butanol	SW8260B	100	1100	4800	**5350**		ug/Kg	04/07/18	3:37	NP	430824
Diisopropyl ether (DIPE)	SW8260B	100	220	960	ND		ug/Kg	04/07/18	3:37	NP	430824
1,1-Dichloroethane	SW8260B	100	210	960	ND		ug/Kg	04/07/18	3:37	NP	430824
ETBE	SW8260B	100	220	960	ND		ug/Kg	04/07/18	3:37	NP	430824
cis-1,2-Dichloroethene	SW8260B	100	210	960	ND		ug/Kg	04/07/18	3:37	NP	430824
2,2-Dichloropropane	SW8260B	100	180	960	ND		ug/Kg	04/07/18	3:37	NP	430824
Bromochloromethane	SW8260B	100	220	960	ND		ug/Kg	04/07/18	3:37	NP	430824
Chloroform	SW8260B	100	230	960	ND		ug/Kg	04/07/18	3:37	NP	430824
Carbon Tetrachloride	SW8260B	100	200	960	ND		ug/Kg	04/07/18	3:37	NP	430824
1,1,1-Trichloroethane	SW8260B	100	200	960	ND		ug/Kg	04/07/18	3:37	NP	430824
1,1-Dichloropropene	SW8260B	100	190	960	ND		ug/Kg	04/07/18	3:37	NP	430824
Benzene	SW8260B	100	210	960	**1490**		ug/Kg	04/07/18	3:37	NP	430824
TAME	SW8260B	100	220	960	ND		ug/Kg	04/07/18	3:37	NP	430824
1,2-Dichloroethane	SW8260B	100	220	960	ND		ug/Kg	04/07/18	3:37	NP	430824
Trichloroethylene	SW8260B	100	170	960	ND		ug/Kg	04/07/18	3:37	NP	430824
Dibromomethane	SW8260B	100	180	960	ND		ug/Kg	04/07/18	3:37	NP	430824
1,2-Dichloropropane	SW8260B	100	180	960	ND		ug/Kg	04/07/18	3:37	NP	430824
Bromodichloromethane	SW8260B	100	190	960	ND		ug/Kg	04/07/18	3:37	NP	430824
cis-1,3-Dichloropropene	SW8260B	100	150	960	ND		ug/Kg	04/07/18	3:37	NP	430824
Toluene	SW8260B	100	170	960	ND		ug/Kg	04/07/18	3:37	NP	430824
Tetrachloroethylene	SW8260B	100	160	960	ND		ug/Kg	04/07/18	3:37	NP	430824
trans-1,3-Dichloropropene	SW8260B	100	160	960	ND		ug/Kg	04/07/18	3:37	NP	430824
1,1,2-Trichloroethane	SW8260B	100	180	960	ND		ug/Kg	04/07/18	3:37	NP	430824
Dibromochloromethane	SW8260B	100	180	960	ND		ug/Kg	04/07/18	3:37	NP	430824
1,3-Dichloropropane	SW8260B	100	180	960	ND		ug/Kg	04/07/18	3:37	NP	430824

Torrent LABORATORY, INC.

SAMPLE RESULTS

Report prepared for: Peter Langtry
Cornerstone Earth Group

Date/Time Received: 04/04/18, 4:15 pm
Date Reported: 04/09/18

Client Sample ID:	EB-14 (29.5-30)	**Lab Sample ID:**	1804038-003B
Project Name/Location:	1433-1493 El Camino Real	**Sample Matrix:**	Soil
Project Number:	958-1-5		
Date/Time Sampled:	04/04/18 / 9:05		
SDG:			

Prep Method: 5035 **Prep Batch Date/Time:** 4/6/18 8:22:00PM
Prep Batch ID: 1104076 **Prep Analyst:** NPAR

Parameters:	Analysis Method	DF	MDL	PQL	Results	Q	Units	Analyzed	Time	By	Analytical Batch
1,2-Dibromoethane	SW8260B	100	170	960	ND		ug/Kg	04/07/18	3:37	NP	430824
Chlorobenzene	SW8260B	100	170	960	ND		ug/Kg	04/07/18	3:37	NP	430824
Ethyl Benzene	SW8260B	100	160	960	**4790**		ug/Kg	04/07/18	3:37	NP	430824
1,1,1,2-Tetrachloroethane	SW8260B	100	190	960	ND		ug/Kg	04/07/18	3:37	NP	430824
m,p-Xylene	SW8260B	100	300	960	**17200**		ug/Kg	04/07/18	3:37	NP	430824
o-Xylene	SW8260B	100	170	960	**5400**		ug/Kg	04/07/18	3:37	NP	430824
Styrene	SW8260B	100	160	960	ND		ug/Kg	04/07/18	3:37	NP	430824
Bromoform	SW8260B	100	160	960	ND		ug/Kg	04/07/18	3:37	NP	430824
Isopropyl Benzene	SW8260B	100	160	960	ND		ug/Kg	04/07/18	3:37	NP	430824
n-Propylbenzene	SW8260B	100	150	960	**2230**		ug/Kg	04/07/18	3:37	NP	430824
Bromobenzene	SW8260B	100	170	960	ND		ug/Kg	04/07/18	3:37	NP	430824
1,1,2,2-Tetrachloroethane	SW8260B	100	180	960	ND		ug/Kg	04/07/18	3:37	NP	430824
2-Chlorotoluene	SW8260B	100	170	960	ND		ug/Kg	04/07/18	3:37	NP	430824
1,3,5-Trimethylbenzene	SW8260B	100	150	960	**3030**		ug/Kg	04/07/18	3:37	NP	430824
1,2,3-Trichloropropane	SW8260B	100	180	960	ND		ug/Kg	04/07/18	3:37	NP	430824
4-Chlorotoluene	SW8260B	100	160	960	ND		ug/Kg	04/07/18	3:37	NP	430824
tert-Butylbenzene	SW8260B	100	160	960	ND		ug/Kg	04/07/18	3:37	NP	430824
1,2,4-Trimethylbenzene	SW8260B	100	130	960	**11000**		ug/Kg	04/07/18	3:37	NP	430824
sec-Butyl Benzene	SW8260B	100	150	960	ND		ug/Kg	04/07/18	3:37	NP	430824
p-Isopropyltoluene	SW8260B	100	140	960	ND		ug/Kg	04/07/18	3:37	NP	430824
1,3-Dichlorobenzene	SW8260B	100	160	960	ND		ug/Kg	04/07/18	3:37	NP	430824
1,4-Dichlorobenzene	SW8260B	100	160	960	ND		ug/Kg	04/07/18	3:37	NP	430824
n-Butylbenzene	SW8260B	100	140	960	ND		ug/Kg	04/07/18	3:37	NP	430824
1,2-Dichlorobenzene	SW8260B	100	170	960	ND		ug/Kg	04/07/18	3:37	NP	430824
1,2-Dibromo-3-Chloropropane	SW8260B	100	180	960	ND		ug/Kg	04/07/18	3:37	NP	430824
Hexachlorobutadiene	SW8260B	100	130	960	ND		ug/Kg	04/07/18	3:37	NP	430824
1,2,4-Trichlorobenzene	SW8260B	100	140	960	ND		ug/Kg	04/07/18	3:37	NP	430824
Naphthalene	SW8260B	100	160	960	**2620**		ug/Kg	04/07/18	3:37	NP	430824
1,2,3-Trichlorobenzene	SW8260B	100	160	960	ND		ug/Kg	04/07/18	3:37	NP	430824
2-Butanone	SW8260B	100	220	960	ND		ug/Kg	04/07/18	3:37	NP	430824
(S) Dibromofluoromethane	SW8260B		59.8 - 148		**103**		%	04/07/18	3:37	NP	430824
(S) Toluene-d8	SW8260B		55.2 - 133		**107**		%	04/07/18	3:37	NP	430824
(S) 4-Bromofluorobenzene	SW8260B		55.8 - 141		**105**		%	04/07/18	3:37	NP	430824

Prep Method: 5035GRO **Prep Batch Date/Time:** 4/6/18 8:22:00PM
Prep Batch ID: 1104077 **Prep Analyst:** NPAR

Torrent LABORATORY, INC.

SAMPLE RESULTS

Report prepared for: Peter Langtry
Cornerstone Earth Group

Date/Time Received: 04/04/18, 4:15 pm
Date Reported: 04/09/18

Client Sample ID:	EB-14 (29.5-30)	**Lab Sample ID:**	1804038-003B
Project Name/Location:	1433-1493 El Camino Real	**Sample Matrix:**	Soil
Project Number:	958-1-5		
Date/Time Sampled:	04/04/18 / 9:05		
SDG:			

Prep Method:	5035GRO	**Prep Batch Date/Time:**	4/6/18	8:22:00PM
Prep Batch ID:	1104077	**Prep Analyst:**	NPAR	

Parameters:	Analysis Method	DF	MDL	PQL	Results	Q	Units	Analyzed	Time	By	Analytical Batch
TPH(Gasoline)	8260TPH	100	4100	9600	**241000**		ug/Kg	04/07/18	3:37	NP	430824
(S) 4-Bromofluorobenzene	8260TPH		43.9 - 127		**118**		%	04/07/18	3:37	NP	430824

NOTE: Result is elevated due to contribution from heavy end hydrocarbons within the C5-C12 range quantified as Gasoline.

Torrent LABORATORY, INC.

SAMPLE RESULTS

Report prepared for: Peter Langtry
Cornerstone Earth Group

Date/Time Received: 04/04/18, 4:15 pm
Date Reported: 04/09/18

Client Sample ID:	EB-15 (4.5-5)	**Lab Sample ID:**	1804038-004A
Project Name/Location:	1433-1493 El Camino Real	**Sample Matrix:**	Soil
Project Number:	958-1-5		
Date/Time Sampled:	04/04/18 / 9:54		
SDG:			

Prep Method:	3546_TPH	**Prep Batch Date/Time:**	4/4/18 3:18:00PM
Prep Batch ID:	1103958	**Prep Analyst:**	SNARASIMHAN

Parameters:	Analysis Method	DF	MDL	PQL	Results	Q	Units	Analyzed	Time	By	Analytical Batch
TPH as Diesel	SW8015B	1	0.85	2.0	**2.84**	x	mg/Kg	04/06/18	2:25	mk	430765
			Acceptance Limits								
Pentacosane (S)	SW8015B		59 - 129		**114**		%	04/06/18	2:25	mk	430765

NOTE: x-not typical of Diesel ref. std: peaks within Diesel range quantified as diesel

Torrent LABORATORY, INC.

SAMPLE RESULTS

Report prepared for: Peter Langtry
Cornerstone Earth Group

Date/Time Received: 04/04/18, 4:15 pm
Date Reported: 04/09/18

Client Sample ID:	EB-15 (4.5-5)	**Lab Sample ID:**	1804038-004B
Project Name/Location:	1433-1493 El Camino Real	**Sample Matrix:**	Soil
Project Number:	958-1-5		
Date/Time Sampled:	04/04/18 / 9:54		
SDG:			

Prep Method:	5035	**Prep Batch Date/Time:**	4/5/18	12:01:00PM
Prep Batch ID:	1104009	**Prep Analyst:**	BALI	

Parameters:	Analysis Method	DF	MDL	PQL	Results	Q	Units	Analyzed	Time	By	Analytical Batch
Dichlorodifluoromethane	SW8260B	1	1.4	12	ND		ug/Kg	04/05/18	20:53	NP	430772
Chloromethane	SW8260B	1	2.1	12	ND		ug/Kg	04/05/18	20:53	NP	430772
Vinyl Chloride	SW8260B	1	2.4	12	ND		ug/Kg	04/05/18	20:53	NP	430772
Bromomethane	SW8260B	1	3.1	12	ND		ug/Kg	04/05/18	20:53	NP	430772
Chloroethane	SW8260B	1	3.5	12	ND		ug/Kg	04/05/18	20:53	NP	430772
Trichlorofluoromethane	SW8260B	1	2.4	12	ND		ug/Kg	04/05/18	20:53	NP	430772
1,1-Dichloroethene	SW8260B	1	2.4	12	ND		ug/Kg	04/05/18	20:53	NP	430772
Freon 113	SW8260B	1	2.2	12	ND		ug/Kg	04/05/18	20:53	NP	430772
Methylene Chloride	SW8260B	1	8.2	12	ND		ug/Kg	04/05/18	20:53	NP	430772
trans-1,2-Dichloroethene	SW8260B	1	2.4	12	ND		ug/Kg	04/05/18	20:53	NP	430772
MTBE	SW8260B	1	2.7	12	ND		ug/Kg	04/05/18	20:53	NP	430772
tert-Butanol	SW8260B	1	13	58	**406**		ug/Kg	04/05/18	20:53	NP	430772
Diisopropyl ether (DIPE)	SW8260B	1	2.7	12	ND		ug/Kg	04/05/18	20:53	NP	430772
1,1-Dichloroethane	SW8260B	1	2.6	12	ND		ug/Kg	04/05/18	20:53	NP	430772
ETBE	SW8260B	1	2.7	12	ND		ug/Kg	04/05/18	20:53	NP	430772
cis-1,2-Dichloroethene	SW8260B	1	2.6	12	ND		ug/Kg	04/05/18	20:53	NP	430772
2,2-Dichloropropane	SW8260B	1	2.2	12	ND		ug/Kg	04/05/18	20:53	NP	430772
Bromochloromethane	SW8260B	1	2.7	12	ND		ug/Kg	04/05/18	20:53	NP	430772
Chloroform	SW8260B	1	2.7	12	ND		ug/Kg	04/05/18	20:53	NP	430772
Carbon Tetrachloride	SW8260B	1	2.4	12	ND		ug/Kg	04/05/18	20:53	NP	430772
1,1,1-Trichloroethane	SW8260B	1	2.4	12	ND		ug/Kg	04/05/18	20:53	NP	430772
1,1-Dichloropropene	SW8260B	1	2.3	12	ND		ug/Kg	04/05/18	20:53	NP	430772
Benzene	SW8260B	1	2.6	12	ND		ug/Kg	04/05/18	20:53	NP	430772
TAME	SW8260B	1	2.6	12	ND		ug/Kg	04/05/18	20:53	NP	430772
1,2-Dichloroethane	SW8260B	1	2.7	12	ND		ug/Kg	04/05/18	20:53	NP	430772
Trichloroethylene	SW8260B	1	2.1	12	ND		ug/Kg	04/05/18	20:53	NP	430772
Dibromomethane	SW8260B	1	2.1	12	ND		ug/Kg	04/05/18	20:53	NP	430772
1,2-Dichloropropane	SW8260B	1	2.2	12	ND		ug/Kg	04/05/18	20:53	NP	430772
Bromodichloromethane	SW8260B	1	2.3	12	ND		ug/Kg	04/05/18	20:53	NP	430772
cis-1,3-Dichloropropene	SW8260B	1	1.8	12	ND		ug/Kg	04/05/18	20:53	NP	430772
Toluene	SW8260B	1	2.1	12	ND		ug/Kg	04/05/18	20:53	NP	430772
Tetrachloroethylene	SW8260B	1	1.9	12	ND		ug/Kg	04/05/18	20:53	NP	430772
trans-1,3-Dichloropropene	SW8260B	1	1.9	12	ND		ug/Kg	04/05/18	20:53	NP	430772
1,1,2-Trichloroethane	SW8260B	1	2.1	12	ND		ug/Kg	04/05/18	20:53	NP	430772
Dibromochloromethane	SW8260B	1	2.2	12	ND		ug/Kg	04/05/18	20:53	NP	430772
1,3-Dichloropropane	SW8260B	1	2.1	12	ND		ug/Kg	04/05/18	20:53	NP	430772

Torrent LABORATORY, INC.

SAMPLE RESULTS

Report prepared for: Peter Langtry
Cornerstone Earth Group

Date/Time Received: 04/04/18, 4:15 pm
Date Reported: 04/09/18

Client Sample ID:	EB-15 (4.5-5)	**Lab Sample ID:**	1804038-004B
Project Name/Location:	1433-1493 El Camino Real	**Sample Matrix:**	Soil
Project Number:	958-1-5		
Date/Time Sampled:	04/04/18 / 9:54		
SDG:			

Prep Method:	5035	**Prep Batch Date/Time:**	4/5/18	12:01:00PM
Prep Batch ID:	1104009	**Prep Analyst:**	BALI	

Parameters:	Analysis Method	DF	MDL	PQL	Results	Q	Units	Analyzed	Time	By	Analytical Batch
1,2-Dibromoethane	SW8260B	1	2.1	12	ND		ug/Kg	04/05/18	20:53	NP	430772
Chlorobenzene	SW8260B	1	2.1	12	ND		ug/Kg	04/05/18	20:53	NP	430772
Ethyl Benzene	SW8260B	1	1.9	12	ND		ug/Kg	04/05/18	20:53	NP	430772
1,1,1,2-Tetrachloroethane	SW8260B	1	2.2	12	ND		ug/Kg	04/05/18	20:53	NP	430772
m,p-Xylene	SW8260B	1	3.7	12	ND		ug/Kg	04/05/18	20:53	NP	430772
o-Xylene	SW8260B	1	2.0	12	ND		ug/Kg	04/05/18	20:53	NP	430772
Styrene	SW8260B	1	1.9	12	ND		ug/Kg	04/05/18	20:53	NP	430772
Bromoform	SW8260B	1	1.9	12	ND		ug/Kg	04/05/18	20:53	NP	430772
Isopropyl Benzene	SW8260B	1	1.9	12	ND		ug/Kg	04/05/18	20:53	NP	430772
n-Propylbenzene	SW8260B	1	1.8	12	ND		ug/Kg	04/05/18	20:53	NP	430772
Bromobenzene	SW8260B	1	2.0	12	ND		ug/Kg	04/05/18	20:53	NP	430772
1,1,2,2-Tetrachloroethane	SW8260B	1	2.2	12	ND		ug/Kg	04/05/18	20:53	NP	430772
2-Chlorotoluene	SW8260B	1	2.0	12	ND		ug/Kg	04/05/18	20:53	NP	430772
1,3,5-Trimethylbenzene	SW8260B	1	1.8	12	ND		ug/Kg	04/05/18	20:53	NP	430772
1,2,3-Trichloropropane	SW8260B	1	2.2	12	ND		ug/Kg	04/05/18	20:53	NP	430772
4-Chlorotoluene	SW8260B	1	1.9	12	ND		ug/Kg	04/05/18	20:53	NP	430772
tert-Butylbenzene	SW8260B	1	1.9	12	ND		ug/Kg	04/05/18	20:53	NP	430772
1,2,4-Trimethylbenzene	SW8260B	1	1.6	12	ND		ug/Kg	04/05/18	20:53	NP	430772
sec-Butyl Benzene	SW8260B	1	1.8	12	ND		ug/Kg	04/05/18	20:53	NP	430772
p-Isopropyltoluene	SW8260B	1	1.7	12	ND		ug/Kg	04/05/18	20:53	NP	430772
1,3-Dichlorobenzene	SW8260B	1	1.9	12	ND		ug/Kg	04/05/18	20:53	NP	430772
1,4-Dichlorobenzene	SW8260B	1	2.0	12	ND		ug/Kg	04/05/18	20:53	NP	430772
n-Butylbenzene	SW8260B	1	1.7	12	ND		ug/Kg	04/05/18	20:53	NP	430772
1,2-Dichlorobenzene	SW8260B	1	2.1	12	ND		ug/Kg	04/05/18	20:53	NP	430772
1,2-Dibromo-3-Chloropropane	SW8260B	1	2.1	12	ND		ug/Kg	04/05/18	20:53	NP	430772
Hexachlorobutadiene	SW8260B	1	1.6	12	ND		ug/Kg	04/05/18	20:53	NP	430772
1,2,4-Trichlorobenzene	SW8260B	1	1.7	12	ND		ug/Kg	04/05/18	20:53	NP	430772
Naphthalene	SW8260B	1	1.9	12	ND		ug/Kg	04/05/18	20:53	NP	430772
1,2,3-Trichlorobenzene	SW8260B	1	1.9	12	ND		ug/Kg	04/05/18	20:53	NP	430772
2-Butanone	SW8260B	1	2.7	12	ND		ug/Kg	04/05/18	20:53	NP	430772
(S) Dibromofluoromethane	SW8260B		59.8 - 148		**86.4**		%	04/05/18	20:53	NP	430772
(S) Toluene-d8	SW8260B		55.2 - 133		**94.5**		%	04/05/18	20:53	NP	430772
(S) 4-Bromofluorobenzene	SW8260B		55.8 - 141		**112**		%	04/05/18	20:53	NP	430772

Prep Method:	5035GRO	**Prep Batch Date/Time:**	4/5/18	12:47:00PM
Prep Batch ID:	1104010	**Prep Analyst:**	BALI	

Torrent LABORATORY, INC.

SAMPLE RESULTS

Report prepared for: Peter Langtry
Cornerstone Earth Group

Date/Time Received: 04/04/18, 4:15 pm
Date Reported: 04/09/18

Client Sample ID:	EB-15 (4.5-5)	**Lab Sample ID:**	1804038-004B
Project Name/Location:	1433-1493 El Camino Real	**Sample Matrix:**	Soil
Project Number:	958-1-5		
Date/Time Sampled:	04/04/18 / 9:54		
SDG:			

Prep Method:	5035GRO	**Prep Batch Date/Time:**	4/5/18	12:47:00PM
Prep Batch ID:	1104010	**Prep Analyst:**	BALI	

Parameters:	Analysis Method	DF	MDL	PQL	Results	Q	Units	Analyzed	Time	By	Analytical Batch
TPH(Gasoline)	8260TPH	1	50	120	ND		ug/Kg	04/05/18	20:53	NP	430772
(S) 4-Bromofluorobenzene	8260TPH		43.9 - 127		**104**		%	04/05/18	20:53	NP	430772

Torrent LABORATORY, INC.

SAMPLE RESULTS

Report prepared for: Peter Langtry
Cornerstone Earth Group

Date/Time Received: 04/04/18, 4:15 pm
Date Reported: 04/09/18

Client Sample ID:	EB-15 (9.5-10)	**Lab Sample ID:**	1804038-005A
Project Name/Location:	1433-1493 El Camino Real	**Sample Matrix:**	Soil
Project Number:	958-1-5		
Date/Time Sampled:	04/04/18 / 9:48		
SDG:			

Prep Method:	3546_TPH	**Prep Batch Date/Time:**	4/4/18 3:18:00PM
Prep Batch ID:	1103958	**Prep Analyst:**	SNARASIMHAN

Parameters:	Analysis Method	DF	MDL	PQL	Results	Q	Units	Analyzed	Time	By	Analytical Batch
TPH as Diesel	SW8015B	1	0.85	2.0	**27.0**	x	mg/Kg	04/06/18	10:52	mk	430765
			Acceptance Limits								
Pentacosane (S)	SW8015B		59 - 129		**60.0**		%	04/06/18	10:52	mk	430765

NOTE: x- Chromatographic pattern does not resemble typical diesel reference standard; unknown organics within diesel range lighter than diesel quantified as diesel.

Torrent LABORATORY, INC.

SAMPLE RESULTS

Report prepared for: Peter Langtry
Cornerstone Earth Group

Date/Time Received: 04/04/18, 4:15 pm
Date Reported: 04/09/18

Client Sample ID:	EB-15 (9.5-10)	**Lab Sample ID:**	1804038-005B
Project Name/Location:	1433-1493 El Camino Real	**Sample Matrix:**	Soil
Project Number:	958-1-5		
Date/Time Sampled:	04/04/18 / 9:48		
SDG:			

Prep Method:	5035	**Prep Batch Date/Time:**	4/9/18	9:22:00AM
Prep Batch ID:	1104109	**Prep Analyst:**	NPAR	

Parameters:	Analysis Method	DF	MDL	PQL	Results	Q	Units	Analyzed	Time	By	Analytical Batch
Dichlorodifluoromethane	SW8260B	5000	7400	60000	ND		ug/Kg	04/09/18	18:38	NP	430855
Chloromethane	SW8260B	5000	11000	60000	ND		ug/Kg	04/09/18	18:38	NP	430855
Vinyl Chloride	SW8260B	5000	12000	60000	ND		ug/Kg	04/09/18	18:38	NP	430855
Bromomethane	SW8260B	5000	16000	60000	ND		ug/Kg	04/09/18	18:38	NP	430855
Chloroethane	SW8260B	5000	18000	60000	ND		ug/Kg	04/09/18	18:38	NP	430855
Trichlorofluoromethane	SW8260B	5000	12000	60000	ND		ug/Kg	04/09/18	18:38	NP	430855
1,1-Dichloroethene	SW8260B	5000	12000	60000	ND		ug/Kg	04/09/18	18:38	NP	430855
Freon 113	SW8260B	5000	11000	60000	ND		ug/Kg	04/09/18	18:38	NP	430855
Methylene Chloride	SW8260B	5000	43000	60000	ND		ug/Kg	04/09/18	18:38	NP	430855
trans-1,2-Dichloroethene	SW8260B	5000	13000	60000	ND		ug/Kg	04/09/18	18:38	NP	430855
MTBE	SW8260B	5000	14000	60000	ND		ug/Kg	04/09/18	18:38	NP	430855
tert-Butanol	SW8260B	5000	70000	300000	ND		ug/Kg	04/09/18	18:38	NP	430855
Diisopropyl ether (DIPE)	SW8260B	5000	14000	60000	ND		ug/Kg	04/09/18	18:38	NP	430855
1,1-Dichloroethane	SW8260B	5000	13000	60000	ND		ug/Kg	04/09/18	18:38	NP	430855
ETBE	SW8260B	5000	14000	60000	ND		ug/Kg	04/09/18	18:38	NP	430855
cis-1,2-Dichloroethene	SW8260B	5000	13000	60000	ND		ug/Kg	04/09/18	18:38	NP	430855
2,2-Dichloropropane	SW8260B	5000	12000	60000	ND		ug/Kg	04/09/18	18:38	NP	430855
Bromochloromethane	SW8260B	5000	14000	60000	ND		ug/Kg	04/09/18	18:38	NP	430855
Chloroform	SW8260B	5000	14000	60000	ND		ug/Kg	04/09/18	18:38	NP	430855
Carbon Tetrachloride	SW8260B	5000	12000	60000	ND		ug/Kg	04/09/18	18:38	NP	430855
1,1,1-Trichloroethane	SW8260B	5000	13000	60000	ND		ug/Kg	04/09/18	18:38	NP	430855
1,1-Dichloropropene	SW8260B	5000	12000	60000	ND		ug/Kg	04/09/18	18:38	NP	430855
Benzene	SW8260B	5000	13000	60000	ND		ug/Kg	04/09/18	18:38	NP	430855
TAME	SW8260B	5000	14000	60000	ND		ug/Kg	04/09/18	18:38	NP	430855
1,2-Dichloroethane	SW8260B	5000	14000	60000	ND		ug/Kg	04/09/18	18:38	NP	430855
Trichloroethylene	SW8260B	5000	11000	60000	ND		ug/Kg	04/09/18	18:38	NP	430855
Dibromomethane	SW8260B	5000	11000	60000	ND		ug/Kg	04/09/18	18:38	NP	430855
1,2-Dichloropropane	SW8260B	5000	11000	60000	ND		ug/Kg	04/09/18	18:38	NP	430855
Bromodichloromethane	SW8260B	5000	12000	60000	ND		ug/Kg	04/09/18	18:38	NP	430855
cis-1,3-Dichloropropene	SW8260B	5000	9600	60000	ND		ug/Kg	04/09/18	18:38	NP	430855
Toluene	SW8260B	5000	11000	60000	ND		ug/Kg	04/09/18	18:38	NP	430855
Tetrachloroethylene	SW8260B	5000	10000	60000	ND		ug/Kg	04/09/18	18:38	NP	430855
trans-1,3-Dichloropropene	SW8260B	5000	9900	60000	ND		ug/Kg	04/09/18	18:38	NP	430855
1,1,2-Trichloroethane	SW8260B	5000	11000	60000	ND		ug/Kg	04/09/18	18:38	NP	430855
Dibromochloromethane	SW8260B	5000	11000	60000	ND		ug/Kg	04/09/18	18:38	NP	430855
1,3-Dichloropropane	SW8260B	5000	11000	60000	ND		ug/Kg	04/09/18	18:38	NP	430855

Torrent LABORATORY, INC.

SAMPLE RESULTS

Report prepared for: Peter Langtry
Cornerstone Earth Group

Date/Time Received: 04/04/18, 4:15 pm
Date Reported: 04/09/18

Client Sample ID:	EB-15 (9.5-10)	**Lab Sample ID:**	1804038-005B
Project Name/Location:	1433-1493 El Camino Real	**Sample Matrix:**	Soil
Project Number:	958-1-5		
Date/Time Sampled:	04/04/18 / 9:48		
SDG:			

Prep Method:	5035	**Prep Batch Date/Time:**	4/9/18	9:22:00AM
Prep Batch ID:	1104109	**Prep Analyst:**	NPAR	

Parameters:	Analysis Method	DF	MDL	PQL	Results	Q	Units	Analyzed	Time	By	Analytical Batch
1,2-Dibromoethane	SW8260B	5000	11000	60000	ND		ug/Kg	04/09/18	18:38	NP	430855
Chlorobenzene	SW8260B	5000	11000	60000	ND		ug/Kg	04/09/18	18:38	NP	430855
Ethyl Benzene	SW8260B	5000	9900	60000	ND		ug/Kg	04/09/18	18:38	NP	430855
1,1,1,2-Tetrachloroethane	SW8260B	5000	12000	60000	ND		ug/Kg	04/09/18	18:38	NP	430855
m,p-Xylene	SW8260B	5000	19000	60000	**343000**		ug/Kg	04/09/18	18:38	NP	430855
o-Xylene	SW8260B	5000	10000	60000	**136000**		ug/Kg	04/09/18	18:38	NP	430855
Styrene	SW8260B	5000	9900	60000	ND		ug/Kg	04/09/18	18:38	NP	430855
Bromoform	SW8260B	5000	10000	60000	ND		ug/Kg	04/09/18	18:38	NP	430855
Isopropyl Benzene	SW8260B	5000	9700	60000	ND		ug/Kg	04/09/18	18:38	NP	430855
n-Propylbenzene	SW8260B	5000	9400	60000	**149000**		ug/Kg	04/09/18	18:38	NP	430855
Bromobenzene	SW8260B	5000	11000	60000	ND		ug/Kg	04/09/18	18:38	NP	430855
1,1,2,2-Tetrachloroethane	SW8260B	5000	12000	60000	ND		ug/Kg	04/09/18	18:38	NP	430855
2-Chlorotoluene	SW8260B	5000	11000	60000	ND		ug/Kg	04/09/18	18:38	NP	430855
1,3,5-Trimethylbenzene	SW8260B	5000	9500	60000	**204000**		ug/Kg	04/09/18	18:38	NP	430855
1,2,3-Trichloropropane	SW8260B	5000	11000	60000	ND		ug/Kg	04/09/18	18:38	NP	430855
4-Chlorotoluene	SW8260B	5000	9900	60000	ND		ug/Kg	04/09/18	18:38	NP	430855
tert-Butylbenzene	SW8260B	5000	9800	60000	ND		ug/Kg	04/09/18	18:38	NP	430855
1,2,4-Trimethylbenzene	SW8260B	5000	8200	60000	**718000**		ug/Kg	04/09/18	18:38	NP	430855
sec-Butyl Benzene	SW8260B	5000	9400	60000	ND		ug/Kg	04/09/18	18:38	NP	430855
p-Isopropyltoluene	SW8260B	5000	8800	60000	ND		ug/Kg	04/09/18	18:38	NP	430855
1,3-Dichlorobenzene	SW8260B	5000	10000	60000	ND		ug/Kg	04/09/18	18:38	NP	430855
1,4-Dichlorobenzene	SW8260B	5000	10000	60000	ND		ug/Kg	04/09/18	18:38	NP	430855
n-Butylbenzene	SW8260B	5000	8700	60000	ND		ug/Kg	04/09/18	18:38	NP	430855
1,2-Dichlorobenzene	SW8260B	5000	11000	60000	ND		ug/Kg	04/09/18	18:38	NP	430855
1,2-Dibromo-3-Chloropropane	SW8260B	5000	11000	60000	ND		ug/Kg	04/09/18	18:38	NP	430855
Hexachlorobutadiene	SW8260B	5000	8200	60000	ND		ug/Kg	04/09/18	18:38	NP	430855
1,2,4-Trichlorobenzene	SW8260B	5000	8900	60000	ND		ug/Kg	04/09/18	18:38	NP	430855
Naphthalene	SW8260B	5000	10000	60000	ND		ug/Kg	04/09/18	18:38	NP	430855
1,2,3-Trichlorobenzene	SW8260B	5000	10000	60000	ND		ug/Kg	04/09/18	18:38	NP	430855
2-Butanone	SW8260B	5000	14000	60000	ND		ug/Kg	04/09/18	18:38	NP	430855
(S) Dibromofluoromethane	SW8260B		59.8 - 148		**110**		%	04/09/18	18:38	NP	430855
(S) Toluene-d8	SW8260B		55.2 - 133		**103**		%	04/09/18	18:38	NP	430855
(S) 4-Bromofluorobenzene	SW8260B		55.8 - 141		**103**		%	04/09/18	18:38	NP	430855

Prep Method:	5035GRO	**Prep Batch Date/Time:**	4/9/18	9:22:00AM
Prep Batch ID:	1104111	**Prep Analyst:**	NPAR	

Torrent LABORATORY, INC.

SAMPLE RESULTS

Report prepared for: Peter Langtry
Cornerstone Earth Group

Date/Time Received: 04/04/18, 4:15 pm
Date Reported: 04/09/18

Client Sample ID:	EB-15 (9.5-10)	**Lab Sample ID:**	1804038-005B
Project Name/Location:	1433-1493 El Camino Real	**Sample Matrix:**	Soil
Project Number:	958-1-5		
Date/Time Sampled:	04/04/18 / 9:48		
SDG:			

Prep Method:	5035GRO	**Prep Batch Date/Time:**	4/9/18	9:22:00AM
Prep Batch ID:	1104111	**Prep Analyst:**	NPAR	

Parameters:	Analysis Method	DF	MDL	PQL	Results	Q	Units	Analyzed	Time	By	Analytical Batch
TPH(Gasoline)	8260TPH	5000	260000	600000	**13000000**	x	ug/Kg	04/09/18	18:38	NP	430855
(S) 4-Bromofluorobenzene	8260TPH		43.9 - 127		**107**		%	04/09/18	18:38	NP	430855

NOTE: x - Although some TPH as Gasoline constituents are present, th sample pattern does not match pattern of reference Gasoline standard. Result is elevated due to contribution from heavy end hydrocarbons within C5-C12 range quantified as Gasoline.

Torrent LABORATORY, INC.

SAMPLE RESULTS

Report prepared for: Peter Langtry
Cornerstone Earth Group

Date/Time Received: 04/04/18, 4:15 pm
Date Reported: 04/09/18

Client Sample ID:	EB-15 (14.5-15)	**Lab Sample ID:**	1804038-006A
Project Name/Location:	1433-1493 El Camino Real	**Sample Matrix:**	Soil
Project Number:	958-1-5		
Date/Time Sampled:	04/04/18 / 9:50		
SDG:			

Prep Method:	3546_TPH	**Prep Batch Date/Time:**	4/4/18 3:18:00PM
Prep Batch ID:	1103958	**Prep Analyst:**	SNARASIMHAN

Parameters:	Analysis Method	DF	MDL	PQL	Results	Q	Units	Analyzed	Time	By	Analytical Batch
TPH as Diesel	SW8015B	1	0.85	2.0	**3.07**	x	mg/Kg	04/06/18	3:12	mk	430765
			Acceptance Limits								
Pentacosane (S)	SW8015B		59 - 129		**93.4**		%	04/06/18	3:12	mk	430765

NOTE: x-not typical of Diesel ref. std: peaks within Diesel range quantified as diesel

Torrent LABORATORY, INC.

SAMPLE RESULTS

Report prepared for: Peter Langtry
Cornerstone Earth Group

Date/Time Received: 04/04/18, 4:15 pm
Date Reported: 04/09/18

Client Sample ID:	EB-15 (14.5-15)	**Lab Sample ID:**	1804038-006B
Project Name/Location:	1433-1493 El Camino Real	**Sample Matrix:**	Soil
Project Number:	958-1-5		
Date/Time Sampled:	04/04/18 / 9:50		
SDG:			

Prep Method:	5035	**Prep Batch Date/Time:**	4/5/18	12:01:00PM
Prep Batch ID:	1104009	**Prep Analyst:**	BALI	

Parameters:	Analysis Method	DF	MDL	PQL	Results	Q	Units	Analyzed	Time	By	Analytical Batch
Dichlorodifluoromethane	SW8260B	1	1.3	11	ND		ug/Kg	04/05/18	21:30	NP	430772
Chloromethane	SW8260B	1	2.0	11	ND		ug/Kg	04/05/18	21:30	NP	430772
Vinyl Chloride	SW8260B	1	2.2	11	ND		ug/Kg	04/05/18	21:30	NP	430772
Bromomethane	SW8260B	1	2.9	11	ND		ug/Kg	04/05/18	21:30	NP	430772
Chloroethane	SW8260B	1	3.2	11	ND		ug/Kg	04/05/18	21:30	NP	430772
Trichlorofluoromethane	SW8260B	1	2.2	11	ND		ug/Kg	04/05/18	21:30	NP	430772
1,1-Dichloroethene	SW8260B	1	2.2	11	ND		ug/Kg	04/05/18	21:30	NP	430772
Freon 113	SW8260B	1	2.0	11	ND		ug/Kg	04/05/18	21:30	NP	430772
Methylene Chloride	SW8260B	1	7.6	11	ND		ug/Kg	04/05/18	21:30	NP	430772
trans-1,2-Dichloroethene	SW8260B	1	2.2	11	ND		ug/Kg	04/05/18	21:30	NP	430772
MTBE	SW8260B	1	2.5	11	ND		ug/Kg	04/05/18	21:30	NP	430772
tert-Butanol	SW8260B	1	12	54	**244**		ug/Kg	04/05/18	21:30	NP	430772
Diisopropyl ether (DIPE)	SW8260B	1	2.5	11	ND		ug/Kg	04/05/18	21:30	NP	430772
1,1-Dichloroethane	SW8260B	1	2.4	11	ND		ug/Kg	04/05/18	21:30	NP	430772
ETBE	SW8260B	1	2.5	11	ND		ug/Kg	04/05/18	21:30	NP	430772
cis-1,2-Dichloroethene	SW8260B	1	2.4	11	ND		ug/Kg	04/05/18	21:30	NP	430772
2,2-Dichloropropane	SW8260B	1	2.1	11	ND		ug/Kg	04/05/18	21:30	NP	430772
Bromochloromethane	SW8260B	1	2.5	11	ND		ug/Kg	04/05/18	21:30	NP	430772
Chloroform	SW8260B	1	2.5	11	ND		ug/Kg	04/05/18	21:30	NP	430772
Carbon Tetrachloride	SW8260B	1	2.2	11	ND		ug/Kg	04/05/18	21:30	NP	430772
1,1,1-Trichloroethane	SW8260B	1	2.3	11	ND		ug/Kg	04/05/18	21:30	NP	430772
1,1-Dichloropropene	SW8260B	1	2.1	11	ND		ug/Kg	04/05/18	21:30	NP	430772
Benzene	SW8260B	1	2.4	11	ND		ug/Kg	04/05/18	21:30	NP	430772
TAME	SW8260B	1	2.4	11	ND		ug/Kg	04/05/18	21:30	NP	430772
1,2-Dichloroethane	SW8260B	1	2.5	11	ND		ug/Kg	04/05/18	21:30	NP	430772
Trichloroethylene	SW8260B	1	1.9	11	ND		ug/Kg	04/05/18	21:30	NP	430772
Dibromomethane	SW8260B	1	2.0	11	ND		ug/Kg	04/05/18	21:30	NP	430772
1,2-Dichloropropane	SW8260B	1	2.0	11	ND		ug/Kg	04/05/18	21:30	NP	430772
Bromodichloromethane	SW8260B	1	2.1	11	ND		ug/Kg	04/05/18	21:30	NP	430772
cis-1,3-Dichloropropene	SW8260B	1	1.7	11	ND		ug/Kg	04/05/18	21:30	NP	430772
Toluene	SW8260B	1	2.0	11	ND		ug/Kg	04/05/18	21:30	NP	430772
Tetrachloroethylene	SW8260B	1	1.8	11	ND		ug/Kg	04/05/18	21:30	NP	430772
trans-1,3-Dichloropropene	SW8260B	1	1.8	11	ND		ug/Kg	04/05/18	21:30	NP	430772
1,1,2-Trichloroethane	SW8260B	1	2.0	11	ND		ug/Kg	04/05/18	21:30	NP	430772
Dibromochloromethane	SW8260B	1	2.0	11	ND		ug/Kg	04/05/18	21:30	NP	430772
1,3-Dichloropropane	SW8260B	1	2.0	11	ND		ug/Kg	04/05/18	21:30	NP	430772

Torrent LABORATORY, INC.

SAMPLE RESULTS

Report prepared for: Peter Langtry
Cornerstone Earth Group

Date/Time Received: 04/04/18, 4:15 pm
Date Reported: 04/09/18

Client Sample ID:	EB-15 (14.5-15)	**Lab Sample ID:**	1804038-006B
Project Name/Location:	1433-1493 El Camino Real	**Sample Matrix:**	Soil
Project Number:	958-1-5		
Date/Time Sampled:	04/04/18 / 9:50		
SDG:			

Prep Method:	5035	**Prep Batch Date/Time:**	4/5/18	12:01:00PM
Prep Batch ID:	1104009	**Prep Analyst:**	BALI	

Parameters:	Analysis Method	DF	MDL	PQL	Results	Q	Units	Analyzed	Time	By	Analytical Batch
1,2-Dibromoethane	SW8260B	1	1.9	11	ND		ug/Kg	04/05/18	21:30	NP	430772
Chlorobenzene	SW8260B	1	1.9	11	ND		ug/Kg	04/05/18	21:30	NP	430772
Ethyl Benzene	SW8260B	1	1.8	11	ND		ug/Kg	04/05/18	21:30	NP	430772
1,1,1,2-Tetrachloroethane	SW8260B	1	2.1	11	ND		ug/Kg	04/05/18	21:30	NP	430772
m,p-Xylene	SW8260B	1	3.4	11	ND		ug/Kg	04/05/18	21:30	NP	430772
o-Xylene	SW8260B	1	1.9	11	ND		ug/Kg	04/05/18	21:30	NP	430772
Styrene	SW8260B	1	1.8	11	ND		ug/Kg	04/05/18	21:30	NP	430772
Bromoform	SW8260B	1	1.8	11	ND		ug/Kg	04/05/18	21:30	NP	430772
Isopropyl Benzene	SW8260B	1	1.7	11	ND		ug/Kg	04/05/18	21:30	NP	430772
n-Propylbenzene	SW8260B	1	1.7	11	ND		ug/Kg	04/05/18	21:30	NP	430772
Bromobenzene	SW8260B	1	1.9	11	ND		ug/Kg	04/05/18	21:30	NP	430772
1,1,2,2-Tetrachloroethane	SW8260B	1	2.1	11	ND		ug/Kg	04/05/18	21:30	NP	430772
2-Chlorotoluene	SW8260B	1	1.9	11	ND		ug/Kg	04/05/18	21:30	NP	430772
1,3,5-Trimethylbenzene	SW8260B	1	1.7	11	ND		ug/Kg	04/05/18	21:30	NP	430772
1,2,3-Trichloropropane	SW8260B	1	2.0	11	ND		ug/Kg	04/05/18	21:30	NP	430772
4-Chlorotoluene	SW8260B	1	1.8	11	ND		ug/Kg	04/05/18	21:30	NP	430772
tert-Butylbenzene	SW8260B	1	1.7	11	ND		ug/Kg	04/05/18	21:30	NP	430772
1,2,4-Trimethylbenzene	SW8260B	1	1.5	11	ND		ug/Kg	04/05/18	21:30	NP	430772
sec-Butyl Benzene	SW8260B	1	1.7	11	ND		ug/Kg	04/05/18	21:30	NP	430772
p-Isopropyltoluene	SW8260B	1	1.6	11	ND		ug/Kg	04/05/18	21:30	NP	430772
1,3-Dichlorobenzene	SW8260B	1	1.8	11	ND		ug/Kg	04/05/18	21:30	NP	430772
1,4-Dichlorobenzene	SW8260B	1	1.8	11	ND		ug/Kg	04/05/18	21:30	NP	430772
n-Butylbenzene	SW8260B	1	1.6	11	ND		ug/Kg	04/05/18	21:30	NP	430772
1,2-Dichlorobenzene	SW8260B	1	1.9	11	ND		ug/Kg	04/05/18	21:30	NP	430772
1,2-Dibromo-3-Chloropropane	SW8260B	1	2.0	11	ND		ug/Kg	04/05/18	21:30	NP	430772
Hexachlorobutadiene	SW8260B	1	1.5	11	ND		ug/Kg	04/05/18	21:30	NP	430772
1,2,4-Trichlorobenzene	SW8260B	1	1.6	11	ND		ug/Kg	04/05/18	21:30	NP	430772
Naphthalene	SW8260B	1	1.8	11	ND		ug/Kg	04/05/18	21:30	NP	430772
1,2,3-Trichlorobenzene	SW8260B	1	1.8	11	ND		ug/Kg	04/05/18	21:30	NP	430772
2-Butanone	SW8260B	1	2.5	11	ND		ug/Kg	04/05/18	21:30	NP	430772
(S) Dibromofluoromethane	SW8260B		59.8 - 148		**91.1**		%	04/05/18	21:30	NP	430772
(S) Toluene-d8	SW8260B		55.2 - 133		**95.2**		%	04/05/18	21:30	NP	430772
(S) 4-Bromofluorobenzene	SW8260B		55.8 - 141		**115**		%	04/05/18	21:30	NP	430772

Prep Method:	5035GRO	**Prep Batch Date/Time:**	4/5/18	12:47:00PM
Prep Batch ID:	1104010	**Prep Analyst:**	BALI	

Torrent LABORATORY, INC.

SAMPLE RESULTS

Report prepared for: Peter Langtry
Cornerstone Earth Group

Date/Time Received: 04/04/18, 4:15 pm
Date Reported: 04/09/18

Client Sample ID:	EB-15 (14.5-15)	**Lab Sample ID:**	1804038-006B
Project Name/Location:	1433-1493 El Camino Real	**Sample Matrix:**	Soil
Project Number:	958-1-5		
Date/Time Sampled:	04/04/18 / 9:50		
SDG:			

Prep Method:	5035GRO	**Prep Batch Date/Time:**	4/5/18	12:47:00PM
Prep Batch ID:	1104010	**Prep Analyst:**	BALI	

Parameters:	Analysis Method	DF	MDL	PQL	Results	Q	Units	Analyzed	Time	By	Analytical Batch
TPH(Gasoline)	8260TPH	1	46	110	ND		ug/Kg	04/05/18	21:30	NP	430772
(S) 4-Bromofluorobenzene	8260TPH		43.9 - 127		**106**		%	04/05/18	21:30	NP	430772

Torrent LABORATORY, INC.

SAMPLE RESULTS

Report prepared for: Peter Langtry
Cornerstone Earth Group

Date/Time Received: 04/04/18, 4:15 pm
Date Reported: 04/09/18

Client Sample ID:	EB-16 (4.5-5)	**Lab Sample ID:**	1804038-008A
Project Name/Location:	1433-1493 El Camino Real	**Sample Matrix:**	Soil
Project Number:	958-1-5		
Date/Time Sampled:	04/04/18 / 10:48		
SDG:			

Prep Method:	3546_TPH	**Prep Batch Date/Time:**	4/4/18 3:18:00PM
Prep Batch ID:	1103958	**Prep Analyst:**	SNARASIMHAN

Parameters:	Analysis Method	DF	MDL	PQL	Results	Q	Units	Analyzed	Time	By	Analytical Batch
TPH as Diesel	SW8015B	1	0.85	2.0	**4.61**	x	mg/Kg	04/06/18	3:35	mk	430765
			Acceptance Limits								
Pentacosane (S)	SW8015B		59 - 129		**108**		%	04/06/18	3:35	mk	430765

NOTE: x- Diesel result due to over-lapping of oil range organics and presence of discrete peaks within diesel quantified range.

Torrent LABORATORY, INC.

SAMPLE RESULTS

Report prepared for: Peter Langtry
Cornerstone Earth Group

Date/Time Received: 04/04/18, 4:15 pm
Date Reported: 04/09/18

Client Sample ID:	EB-16 (4.5-5)	**Lab Sample ID:**	1804038-008B
Project Name/Location:	1433-1493 El Camino Real	**Sample Matrix:**	Soil
Project Number:	958-1-5		
Date/Time Sampled:	04/04/18 / 10:48		
SDG:			

Prep Method:	5035	**Prep Batch Date/Time:**	4/5/18	12:01:00PM
Prep Batch ID:	1104009	**Prep Analyst:**	BALI	

Parameters:	Analysis Method	DF	MDL	PQL	Results	Q	Units	Analyzed	Time	By	Analytical Batch
Dichlorodifluoromethane	SW8260B	1	1.3	11	ND		ug/Kg	04/05/18	22:43	NP	430772
Chloromethane	SW8260B	1	1.9	11	ND		ug/Kg	04/05/18	22:43	NP	430772
Vinyl Chloride	SW8260B	1	2.2	11	ND		ug/Kg	04/05/18	22:43	NP	430772
Bromomethane	SW8260B	1	2.9	11	ND		ug/Kg	04/05/18	22:43	NP	430772
Chloroethane	SW8260B	1	3.2	11	ND		ug/Kg	04/05/18	22:43	NP	430772
Trichlorofluoromethane	SW8260B	1	2.2	11	ND		ug/Kg	04/05/18	22:43	NP	430772
1,1-Dichloroethene	SW8260B	1	2.2	11	ND		ug/Kg	04/05/18	22:43	NP	430772
Freon 113	SW8260B	1	2.0	11	ND		ug/Kg	04/05/18	22:43	NP	430772
Methylene Chloride	SW8260B	1	7.5	11	ND		ug/Kg	04/05/18	22:43	NP	430772
trans-1,2-Dichloroethene	SW8260B	1	2.2	11	ND		ug/Kg	04/05/18	22:43	NP	430772
MTBE	SW8260B	1	2.5	11	ND		ug/Kg	04/05/18	22:43	NP	430772
tert-Butanol	SW8260B	1	12	53	**206**		ug/Kg	04/05/18	22:43	NP	430772
Diisopropyl ether (DIPE)	SW8260B	1	2.4	11	ND		ug/Kg	04/05/18	22:43	NP	430772
1,1-Dichloroethane	SW8260B	1	2.3	11	ND		ug/Kg	04/05/18	22:43	NP	430772
ETBE	SW8260B	1	2.4	11	ND		ug/Kg	04/05/18	22:43	NP	430772
cis-1,2-Dichloroethene	SW8260B	1	2.4	11	ND		ug/Kg	04/05/18	22:43	NP	430772
2,2-Dichloropropane	SW8260B	1	2.0	11	ND		ug/Kg	04/05/18	22:43	NP	430772
Bromochloromethane	SW8260B	1	2.5	11	ND		ug/Kg	04/05/18	22:43	NP	430772
Chloroform	SW8260B	1	2.5	11	ND		ug/Kg	04/05/18	22:43	NP	430772
Carbon Tetrachloride	SW8260B	1	2.2	11	ND		ug/Kg	04/05/18	22:43	NP	430772
1,1,1-Trichloroethane	SW8260B	1	2.2	11	ND		ug/Kg	04/05/18	22:43	NP	430772
1,1-Dichloropropene	SW8260B	1	2.1	11	ND		ug/Kg	04/05/18	22:43	NP	430772
Benzene	SW8260B	1	2.4	11	ND		ug/Kg	04/05/18	22:43	NP	430772
TAME	SW8260B	1	2.4	11	ND		ug/Kg	04/05/18	22:43	NP	430772
1,2-Dichloroethane	SW8260B	1	2.5	11	ND		ug/Kg	04/05/18	22:43	NP	430772
Trichloroethylene	SW8260B	1	1.9	11	ND		ug/Kg	04/05/18	22:43	NP	430772
Dibromomethane	SW8260B	1	1.9	11	ND		ug/Kg	04/05/18	22:43	NP	430772
1,2-Dichloropropane	SW8260B	1	2.0	11	ND		ug/Kg	04/05/18	22:43	NP	430772
Bromodichloromethane	SW8260B	1	2.1	11	ND		ug/Kg	04/05/18	22:43	NP	430772
cis-1,3-Dichloropropene	SW8260B	1	1.7	11	ND		ug/Kg	04/05/18	22:43	NP	430772
Toluene	SW8260B	1	1.9	11	ND		ug/Kg	04/05/18	22:43	NP	430772
Tetrachloroethylene	SW8260B	1	1.8	11	ND		ug/Kg	04/05/18	22:43	NP	430772
trans-1,3-Dichloropropene	SW8260B	1	1.7	11	ND		ug/Kg	04/05/18	22:43	NP	430772
1,1,2-Trichloroethane	SW8260B	1	1.9	11	ND		ug/Kg	04/05/18	22:43	NP	430772
Dibromochloromethane	SW8260B	1	2.0	11	ND		ug/Kg	04/05/18	22:43	NP	430772
1,3-Dichloropropane	SW8260B	1	1.9	11	ND		ug/Kg	04/05/18	22:43	NP	430772

Torrent LABORATORY, INC.

SAMPLE RESULTS

Report prepared for: Peter Langtry
Cornerstone Earth Group

Date/Time Received: 04/04/18, 4:15 pm
Date Reported: 04/09/18

Client Sample ID:	EB-16 (4.5-5)	**Lab Sample ID:**	1804038-008B
Project Name/Location:	1433-1493 El Camino Real	**Sample Matrix:**	Soil
Project Number:	958-1-5		
Date/Time Sampled:	04/04/18 / 10:48		
SDG:			

Prep Method: 5035 **Prep Batch Date/Time:** 4/5/18 12:01:00PM
Prep Batch ID: 1104009 **Prep Analyst:** BALI

Parameters:	Analysis Method	DF	MDL	PQL	Results	Q	Units	Analyzed	Time	By	Analytical Batch
1,2-Dibromoethane	SW8260B	1	1.9	11	ND		ug/Kg	04/05/18	22:43	NP	430772
Chlorobenzene	SW8260B	1	1.9	11	ND		ug/Kg	04/05/18	22:43	NP	430772
Ethyl Benzene	SW8260B	1	1.8	11	ND		ug/Kg	04/05/18	22:43	NP	430772
1,1,1,2-Tetrachloroethane	SW8260B	1	2.0	11	ND		ug/Kg	04/05/18	22:43	NP	430772
m,p-Xylene	SW8260B	1	3.4	11	ND		ug/Kg	04/05/18	22:43	NP	430772
o-Xylene	SW8260B	1	1.8	11	ND		ug/Kg	04/05/18	22:43	NP	430772
Styrene	SW8260B	1	1.7	11	ND		ug/Kg	04/05/18	22:43	NP	430772
Bromoform	SW8260B	1	1.8	11	ND		ug/Kg	04/05/18	22:43	NP	430772
Isopropyl Benzene	SW8260B	1	1.7	11	ND		ug/Kg	04/05/18	22:43	NP	430772
n-Propylbenzene	SW8260B	1	1.7	11	ND		ug/Kg	04/05/18	22:43	NP	430772
Bromobenzene	SW8260B	1	1.9	11	ND		ug/Kg	04/05/18	22:43	NP	430772
1,1,2,2-Tetrachloroethane	SW8260B	1	2.0	11	ND		ug/Kg	04/05/18	22:43	NP	430772
2-Chlorotoluene	SW8260B	1	1.9	11	ND		ug/Kg	04/05/18	22:43	NP	430772
1,3,5-Trimethylbenzene	SW8260B	1	1.7	11	ND		ug/Kg	04/05/18	22:43	NP	430772
1,2,3-Trichloropropane	SW8260B	1	2.0	11	ND		ug/Kg	04/05/18	22:43	NP	430772
4-Chlorotoluene	SW8260B	1	1.7	11	ND		ug/Kg	04/05/18	22:43	NP	430772
tert-Butylbenzene	SW8260B	1	1.7	11	ND		ug/Kg	04/05/18	22:43	NP	430772
1,2,4-Trimethylbenzene	SW8260B	1	1.4	11	ND		ug/Kg	04/05/18	22:43	NP	430772
sec-Butyl Benzene	SW8260B	1	1.7	11	ND		ug/Kg	04/05/18	22:43	NP	430772
p-Isopropyltoluene	SW8260B	1	1.6	11	ND		ug/Kg	04/05/18	22:43	NP	430772
1,3-Dichlorobenzene	SW8260B	1	1.8	11	ND		ug/Kg	04/05/18	22:43	NP	430772
1,4-Dichlorobenzene	SW8260B	1	1.8	11	ND		ug/Kg	04/05/18	22:43	NP	430772
n-Butylbenzene	SW8260B	1	1.5	11	ND		ug/Kg	04/05/18	22:43	NP	430772
1,2-Dichlorobenzene	SW8260B	1	1.9	11	ND		ug/Kg	04/05/18	22:43	NP	430772
1,2-Dibromo-3-Chloropropane	SW8260B	1	2.0	11	ND		ug/Kg	04/05/18	22:43	NP	430772
Hexachlorobutadiene	SW8260B	1	1.5	11	ND		ug/Kg	04/05/18	22:43	NP	430772
1,2,4-Trichlorobenzene	SW8260B	1	1.6	11	ND		ug/Kg	04/05/18	22:43	NP	430772
Naphthalene	SW8260B	1	1.8	11	ND		ug/Kg	04/05/18	22:43	NP	430772
1,2,3-Trichlorobenzene	SW8260B	1	1.8	11	ND		ug/Kg	04/05/18	22:43	NP	430772
2-Butanone	SW8260B	1	2.4	11	ND		ug/Kg	04/05/18	22:43	NP	430772
(S) Dibromofluoromethane	SW8260B		59.8 - 148		**89.7**		%	04/05/18	22:43	NP	430772
(S) Toluene-d8	SW8260B		55.2 - 133		**95.9**		%	04/05/18	22:43	NP	430772
(S) 4-Bromofluorobenzene	SW8260B		55.8 - 141		**116**		%	04/05/18	22:43	NP	430772

Prep Method: 5035GRO **Prep Batch Date/Time:** 4/5/18 12:47:00PM
Prep Batch ID: 1104010 **Prep Analyst:** BALI

Torrent LABORATORY, INC.

SAMPLE RESULTS

Report prepared for: Peter Langtry
Cornerstone Earth Group

Date/Time Received: 04/04/18, 4:15 pm
Date Reported: 04/09/18

Client Sample ID:	EB-16 (4.5-5)	**Lab Sample ID:**	1804038-008B
Project Name/Location:	1433-1493 El Camino Real	**Sample Matrix:**	Soil
Project Number:	958-1-5		
Date/Time Sampled:	04/04/18 / 10:48		
SDG:			

Prep Method:	5035GRO	**Prep Batch Date/Time:**	4/5/18	12:47:00PM
Prep Batch ID:	1104010	**Prep Analyst:**	BALI	

Parameters:	Analysis Method	DF	MDL	PQL	Results	Q	Units	Analyzed	Time	By	Analytical Batch
TPH(Gasoline)	8260TPH	1	46	110	ND		ug/Kg	04/05/18	22:43	NP	430772
(S) 4-Bromofluorobenzene	8260TPH		43.9 - 127		**91.1**		%	04/05/18	22:43	NP	430772

Torrent LABORATORY, INC.

SAMPLE RESULTS

Report prepared for: Peter Langtry
Cornerstone Earth Group

Date/Time Received: 04/04/18, 4:15 pm
Date Reported: 04/09/18

Client Sample ID:	EB-16 (9.5-10)	**Lab Sample ID:**	1804038-009A
Project Name/Location:	1433-1493 El Camino Real	**Sample Matrix:**	Soil
Project Number:	958-1-5		
Date/Time Sampled:	04/04/18 / 10:50		
SDG:			

Prep Method:	3546_TPH	**Prep Batch Date/Time:**	4/4/18 3:18:00PM
Prep Batch ID:	1103958	**Prep Analyst:**	SNARASIMHAN

Parameters:	Analysis Method	DF	MDL	PQL	Results	Q	Units	Analyzed	Time	By	Analytical Batch
TPH as Diesel	SW8015B	1	0.85	2.0	ND		mg/Kg	04/06/18	3:58	mk	430765
			Acceptance Limits								
Pentacosane (S)	SW8015B		59 - 129		**115**		%	04/06/18	3:58	mk	430765

Torrent LABORATORY, INC.

SAMPLE RESULTS

Report prepared for: Peter Langtry
Cornerstone Earth Group

Date/Time Received: 04/04/18, 4:15 pm
Date Reported: 04/09/18

Client Sample ID:	EB-16 (9.5-10)	**Lab Sample ID:**	1804038-009B
Project Name/Location:	1433-1493 El Camino Real	**Sample Matrix:**	Soil
Project Number:	958-1-5		
Date/Time Sampled:	04/04/18 / 10:50		
SDG:			

Prep Method:	5035	**Prep Batch Date/Time:**	4/5/18	12:01:00PM
Prep Batch ID:	1104009	**Prep Analyst:**	BALI	

Parameters:	Analysis Method	DF	MDL	PQL	Results	Q	Units	Analyzed	Time	By	Analytical Batch
Dichlorodifluoromethane	SW8260B	1	1.3	11	ND		ug/Kg	04/05/18	23:19	NP	430772
Chloromethane	SW8260B	1	1.9	11	ND		ug/Kg	04/05/18	23:19	NP	430772
Vinyl Chloride	SW8260B	1	2.2	11	ND		ug/Kg	04/05/18	23:19	NP	430772
Bromomethane	SW8260B	1	2.8	11	ND		ug/Kg	04/05/18	23:19	NP	430772
Chloroethane	SW8260B	1	3.2	11	ND		ug/Kg	04/05/18	23:19	NP	430772
Trichlorofluoromethane	SW8260B	1	2.2	11	ND		ug/Kg	04/05/18	23:19	NP	430772
1,1-Dichloroethene	SW8260B	1	2.1	11	ND		ug/Kg	04/05/18	23:19	NP	430772
Freon 113	SW8260B	1	2.0	11	ND		ug/Kg	04/05/18	23:19	NP	430772
Methylene Chloride	SW8260B	1	7.5	11	ND		ug/Kg	04/05/18	23:19	NP	430772
trans-1,2-Dichloroethene	SW8260B	1	2.2	11	ND		ug/Kg	04/05/18	23:19	NP	430772
MTBE	SW8260B	1	2.5	11	ND		ug/Kg	04/05/18	23:19	NP	430772
tert-Butanol	SW8260B	1	12	53	**215**		ug/Kg	04/05/18	23:19	NP	430772
Diisopropyl ether (DIPE)	SW8260B	1	2.4	11	ND		ug/Kg	04/05/18	23:19	NP	430772
1,1-Dichloroethane	SW8260B	1	2.3	11	ND		ug/Kg	04/05/18	23:19	NP	430772
ETBE	SW8260B	1	2.4	11	ND		ug/Kg	04/05/18	23:19	NP	430772
cis-1,2-Dichloroethene	SW8260B	1	2.4	11	ND		ug/Kg	04/05/18	23:19	NP	430772
2,2-Dichloropropane	SW8260B	1	2.0	11	ND		ug/Kg	04/05/18	23:19	NP	430772
Bromochloromethane	SW8260B	1	2.5	11	ND		ug/Kg	04/05/18	23:19	NP	430772
Chloroform	SW8260B	1	2.5	11	ND		ug/Kg	04/05/18	23:19	NP	430772
Carbon Tetrachloride	SW8260B	1	2.2	11	ND		ug/Kg	04/05/18	23:19	NP	430772
1,1,1-Trichloroethane	SW8260B	1	2.2	11	ND		ug/Kg	04/05/18	23:19	NP	430772
1,1-Dichloropropene	SW8260B	1	2.1	11	ND		ug/Kg	04/05/18	23:19	NP	430772
Benzene	SW8260B	1	2.4	11	ND		ug/Kg	04/05/18	23:19	NP	430772
TAME	SW8260B	1	2.4	11	ND		ug/Kg	04/05/18	23:19	NP	430772
1,2-Dichloroethane	SW8260B	1	2.5	11	ND		ug/Kg	04/05/18	23:19	NP	430772
Trichloroethylene	SW8260B	1	1.9	11	ND		ug/Kg	04/05/18	23:19	NP	430772
Dibromomethane	SW8260B	1	1.9	11	ND		ug/Kg	04/05/18	23:19	NP	430772
1,2-Dichloropropane	SW8260B	1	2.0	11	ND		ug/Kg	04/05/18	23:19	NP	430772
Bromodichloromethane	SW8260B	1	2.1	11	ND		ug/Kg	04/05/18	23:19	NP	430772
cis-1,3-Dichloropropene	SW8260B	1	1.7	11	ND		ug/Kg	04/05/18	23:19	NP	430772
Toluene	SW8260B	1	1.9	11	ND		ug/Kg	04/05/18	23:19	NP	430772
Tetrachloroethylene	SW8260B	1	1.8	11	ND		ug/Kg	04/05/18	23:19	NP	430772
trans-1,3-Dichloropropene	SW8260B	1	1.7	11	ND		ug/Kg	04/05/18	23:19	NP	430772
1,1,2-Trichloroethane	SW8260B	1	1.9	11	ND		ug/Kg	04/05/18	23:19	NP	430772
Dibromochloromethane	SW8260B	1	2.0	11	ND		ug/Kg	04/05/18	23:19	NP	430772
1,3-Dichloropropane	SW8260B	1	1.9	11	ND		ug/Kg	04/05/18	23:19	NP	430772

Torrent LABORATORY, INC.

SAMPLE RESULTS

Report prepared for: Peter Langtry
Cornerstone Earth Group

Date/Time Received: 04/04/18, 4:15 pm
Date Reported: 04/09/18

Client Sample ID:	EB-16 (9.5-10)	**Lab Sample ID:**	1804038-009B
Project Name/Location:	1433-1493 El Camino Real	**Sample Matrix:**	Soil
Project Number:	958-1-5		
Date/Time Sampled:	04/04/18 / 10:50		
SDG:			

Prep Method:	5035	**Prep Batch Date/Time:**	4/5/18	12:01:00PM
Prep Batch ID:	1104009	**Prep Analyst:**	BALI	

Parameters:	Analysis Method	DF	MDL	PQL	Results	Q	Units	Analyzed	Time	By	Analytical Batch
1,2-Dibromoethane	SW8260B	1	1.9	11	ND		ug/Kg	04/05/18	23:19	NP	430772
Chlorobenzene	SW8260B	1	1.9	11	ND		ug/Kg	04/05/18	23:19	NP	430772
Ethyl Benzene	SW8260B	1	1.7	11	ND		ug/Kg	04/05/18	23:19	NP	430772
1,1,1,2-Tetrachloroethane	SW8260B	1	2.0	11	ND		ug/Kg	04/05/18	23:19	NP	430772
m,p-Xylene	SW8260B	1	3.3	11	ND		ug/Kg	04/05/18	23:19	NP	430772
o-Xylene	SW8260B	1	1.8	11	ND		ug/Kg	04/05/18	23:19	NP	430772
Styrene	SW8260B	1	1.7	11	ND		ug/Kg	04/05/18	23:19	NP	430772
Bromoform	SW8260B	1	1.8	11	ND		ug/Kg	04/05/18	23:19	NP	430772
Isopropyl Benzene	SW8260B	1	1.7	11	ND		ug/Kg	04/05/18	23:19	NP	430772
n-Propylbenzene	SW8260B	1	1.7	11	ND		ug/Kg	04/05/18	23:19	NP	430772
Bromobenzene	SW8260B	1	1.9	11	ND		ug/Kg	04/05/18	23:19	NP	430772
1,1,2,2-Tetrachloroethane	SW8260B	1	2.0	11	ND		ug/Kg	04/05/18	23:19	NP	430772
2-Chlorotoluene	SW8260B	1	1.9	11	ND		ug/Kg	04/05/18	23:19	NP	430772
1,3,5-Trimethylbenzene	SW8260B	1	1.7	11	ND		ug/Kg	04/05/18	23:19	NP	430772
1,2,3-Trichloropropane	SW8260B	1	2.0	11	ND		ug/Kg	04/05/18	23:19	NP	430772
4-Chlorotoluene	SW8260B	1	1.7	11	ND		ug/Kg	04/05/18	23:19	NP	430772
tert-Butylbenzene	SW8260B	1	1.7	11	ND		ug/Kg	04/05/18	23:19	NP	430772
1,2,4-Trimethylbenzene	SW8260B	1	1.4	11	ND		ug/Kg	04/05/18	23:19	NP	430772
sec-Butyl Benzene	SW8260B	1	1.6	11	ND		ug/Kg	04/05/18	23:19	NP	430772
p-Isopropyltoluene	SW8260B	1	1.5	11	ND		ug/Kg	04/05/18	23:19	NP	430772
1,3-Dichlorobenzene	SW8260B	1	1.8	11	ND		ug/Kg	04/05/18	23:19	NP	430772
1,4-Dichlorobenzene	SW8260B	1	1.8	11	ND		ug/Kg	04/05/18	23:19	NP	430772
n-Butylbenzene	SW8260B	1	1.5	11	ND		ug/Kg	04/05/18	23:19	NP	430772
1,2-Dichlorobenzene	SW8260B	1	1.9	11	ND		ug/Kg	04/05/18	23:19	NP	430772
1,2-Dibromo-3-Chloropropane	SW8260B	1	2.0	11	ND		ug/Kg	04/05/18	23:19	NP	430772
Hexachlorobutadiene	SW8260B	1	1.4	11	ND		ug/Kg	04/05/18	23:19	NP	430772
1,2,4-Trichlorobenzene	SW8260B	1	1.6	11	ND		ug/Kg	04/05/18	23:19	NP	430772
Naphthalene	SW8260B	1	1.8	11	ND		ug/Kg	04/05/18	23:19	NP	430772
1,2,3-Trichlorobenzene	SW8260B	1	1.8	11	ND		ug/Kg	04/05/18	23:19	NP	430772
2-Butanone	SW8260B	1	2.4	11	ND		ug/Kg	04/05/18	23:19	NP	430772
(S) Dibromofluoromethane	SW8260B		59.8 - 148		**93.2**		%	04/05/18	23:19	NP	430772
(S) Toluene-d8	SW8260B		55.2 - 133		**96.4**		%	04/05/18	23:19	NP	430772
(S) 4-Bromofluorobenzene	SW8260B		55.8 - 141		**118**		%	04/05/18	23:19	NP	430772

Prep Method:	5035GRO	**Prep Batch Date/Time:**	4/5/18	12:47:00PM
Prep Batch ID:	1104010	**Prep Analyst:**	BALI	

Torrent LABORATORY, INC.

SAMPLE RESULTS

Report prepared for: Peter Langtry
Cornerstone Earth Group

Date/Time Received: 04/04/18, 4:15 pm
Date Reported: 04/09/18

Client Sample ID:	EB-16 (9.5-10)	**Lab Sample ID:**	1804038-009B
Project Name/Location:	1433-1493 El Camino Real	**Sample Matrix:**	Soil
Project Number:	958-1-5		
Date/Time Sampled:	04/04/18 / 10:50		
SDG:			

Prep Method:	5035GRO	**Prep Batch Date/Time:**	4/5/18	12:47:00PM
Prep Batch ID:	1104010	**Prep Analyst:**	BALI	

Parameters:	Analysis Method	DF	MDL	PQL	Results	Q	Units	Analyzed	Time	By	Analytical Batch
TPH(Gasoline)	8260TPH	1	46	110	ND		ug/Kg	04/05/18	23:19	NP	430772
(S) 4-Bromofluorobenzene	8260TPH		43.9 - 127		**107**		%	04/05/18	23:19	NP	430772

Torrent LABORATORY, INC.

SAMPLE RESULTS

Report prepared for: Peter Langtry
Cornerstone Earth Group

Date/Time Received: 04/04/18, 4:15 pm
Date Reported: 04/09/18

Client Sample ID:	EB-16 (14.5-15)	**Lab Sample ID:**	1804038-010A
Project Name/Location:	1433-1493 El Camino Real	**Sample Matrix:**	Soil
Project Number:	958-1-5		
Date/Time Sampled:	04/04/18 / 10:54		
SDG:			

Prep Method:	3546_TPH	**Prep Batch Date/Time:**	4/4/18 3:18:00PM
Prep Batch ID:	1103958	**Prep Analyst:**	SNARASIMHAN

Parameters:	Analysis Method	DF	MDL	PQL	Results	Q	Units	Analyzed	Time	By	Analytical Batch
TPH as Diesel	SW8015B	1	0.85	2.0	**13.8**	x	mg/Kg	04/06/18	4:22	mk	430765
			Acceptance Limits								
Pentacosane (S)	SW8015B		59 - 129		**104**		%	04/06/18	4:22	mk	430765

NOTE: x- Chromatographic pattern does not resemble typical diesel reference standard; unknown organics within diesel range lighter than diesel quantified as diesel.

Torrent LABORATORY, INC.

SAMPLE RESULTS

Report prepared for: Peter Langtry
Cornerstone Earth Group

Date/Time Received: 04/04/18, 4:15 pm
Date Reported: 04/09/18

Client Sample ID:	EB-16 (14.5-15)	**Lab Sample ID:**	1804038-010B
Project Name/Location:	1433-1493 El Camino Real	**Sample Matrix:**	Soil
Project Number:	958-1-5		
Date/Time Sampled:	04/04/18 / 10:54		
SDG:			

Prep Method:	5035	**Prep Batch Date/Time:**	4/6/18	8:22:00PM
Prep Batch ID:	1104076	**Prep Analyst:**	NPAR	

Parameters:	Analysis Method	DF	MDL	PQL	Results	Q	Units	Analyzed	Time	By	Analytical Batch
Dichlorodifluoromethane	SW8260B	1	1.1	9.0	ND		ug/Kg	04/06/18	23:23	NP	430824
Chloromethane	SW8260B	1	1.6	9.0	ND		ug/Kg	04/06/18	23:23	NP	430824
Vinyl Chloride	SW8260B	1	1.8	9.0	ND		ug/Kg	04/06/18	23:23	NP	430824
Bromomethane	SW8260B	1	2.4	9.0	ND		ug/Kg	04/06/18	23:23	NP	430824
Chloroethane	SW8260B	1	2.7	9.0	ND		ug/Kg	04/06/18	23:23	NP	430824
Trichlorofluoromethane	SW8260B	1	1.9	9.0	ND		ug/Kg	04/06/18	23:23	NP	430824
1,1-Dichloroethene	SW8260B	1	1.8	9.0	ND		ug/Kg	04/06/18	23:23	NP	430824
Freon 113	SW8260B	1	1.7	9.0	ND		ug/Kg	04/06/18	23:23	NP	430824
Methylene Chloride	SW8260B	1	6.4	9.0	ND		ug/Kg	04/06/18	23:23	NP	430824
trans-1,2-Dichloroethene	SW8260B	1	1.9	9.0	ND		ug/Kg	04/06/18	23:23	NP	430824
MTBE	SW8260B	1	2.1	9.0	ND		ug/Kg	04/06/18	23:23	NP	430824
tert-Butanol	SW8260B	1	10	45	ND		ug/Kg	04/06/18	23:23	NP	430824
Diisopropyl ether (DIPE)	SW8260B	1	2.1	9.0	ND		ug/Kg	04/06/18	23:23	NP	430824
1,1-Dichloroethane	SW8260B	1	2.0	9.0	ND		ug/Kg	04/06/18	23:23	NP	430824
ETBE	SW8260B	1	2.1	9.0	ND		ug/Kg	04/06/18	23:23	NP	430824
cis-1,2-Dichloroethene	SW8260B	1	2.0	9.0	ND		ug/Kg	04/06/18	23:23	NP	430824
2,2-Dichloropropane	SW8260B	1	1.7	9.0	ND		ug/Kg	04/06/18	23:23	NP	430824
Bromochloromethane	SW8260B	1	2.1	9.0	ND		ug/Kg	04/06/18	23:23	NP	430824
Chloroform	SW8260B	1	2.1	9.0	ND		ug/Kg	04/06/18	23:23	NP	430824
Carbon Tetrachloride	SW8260B	1	1.8	9.0	ND		ug/Kg	04/06/18	23:23	NP	430824
1,1,1-Trichloroethane	SW8260B	1	1.9	9.0	ND		ug/Kg	04/06/18	23:23	NP	430824
1,1-Dichloropropene	SW8260B	1	1.8	9.0	ND		ug/Kg	04/06/18	23:23	NP	430824
Benzene	SW8260B	1	2.0	9.0	ND		ug/Kg	04/06/18	23:23	NP	430824
TAME	SW8260B	1	2.0	9.0	ND		ug/Kg	04/06/18	23:23	NP	430824
1,2-Dichloroethane	SW8260B	1	2.1	9.0	ND		ug/Kg	04/06/18	23:23	NP	430824
Trichloroethylene	SW8260B	1	1.6	9.0	ND		ug/Kg	04/06/18	23:23	NP	430824
Dibromomethane	SW8260B	1	1.7	9.0	ND		ug/Kg	04/06/18	23:23	NP	430824
1,2-Dichloropropane	SW8260B	1	1.7	9.0	ND		ug/Kg	04/06/18	23:23	NP	430824
Bromodichloromethane	SW8260B	1	1.8	9.0	ND		ug/Kg	04/06/18	23:23	NP	430824
cis-1,3-Dichloropropene	SW8260B	1	1.4	9.0	ND		ug/Kg	04/06/18	23:23	NP	430824
Toluene	SW8260B	1	1.6	9.0	ND		ug/Kg	04/06/18	23:23	NP	430824
Tetrachloroethylene	SW8260B	1	1.5	9.0	ND		ug/Kg	04/06/18	23:23	NP	430824
trans-1,3-Dichloropropene	SW8260B	1	1.5	9.0	ND		ug/Kg	04/06/18	23:23	NP	430824
1,1,2-Trichloroethane	SW8260B	1	1.7	9.0	ND		ug/Kg	04/06/18	23:23	NP	430824
Dibromochloromethane	SW8260B	1	1.7	9.0	ND		ug/Kg	04/06/18	23:23	NP	430824
1,3-Dichloropropane	SW8260B	1	1.7	9.0	ND		ug/Kg	04/06/18	23:23	NP	430824

Torrent LABORATORY, INC.

SAMPLE RESULTS

Report prepared for: Peter Langtry
Cornerstone Earth Group

Date/Time Received: 04/04/18, 4:15 pm
Date Reported: 04/09/18

Client Sample ID:	EB-16 (14.5-15)	**Lab Sample ID:**	1804038-010B
Project Name/Location:	1433-1493 El Camino Real	**Sample Matrix:**	Soil
Project Number:	958-1-5		
Date/Time Sampled:	04/04/18 / 10:54		
SDG:			

Prep Method:	5035	**Prep Batch Date/Time:**	4/6/18	8:22:00PM
Prep Batch ID:	1104076	**Prep Analyst:**	NPAR	

Parameters:	Analysis Method	DF	MDL	PQL	Results	Q	Units	Analyzed	Time	By	Analytical Batch
1,2-Dibromoethane	SW8260B	1	1.6	9.0	ND		ug/Kg	04/06/18	23:23	NP	430824
Chlorobenzene	SW8260B	1	1.6	9.0	ND		ug/Kg	04/06/18	23:23	NP	430824
Ethyl Benzene	SW8260B	1	1.5	9.0	ND		ug/Kg	04/06/18	23:23	NP	430824
1,1,1,2-Tetrachloroethane	SW8260B	1	1.7	9.0	ND		ug/Kg	04/06/18	23:23	NP	430824
m,p-Xylene	SW8260B	1	2.8	9.0	ND		ug/Kg	04/06/18	23:23	NP	430824
o-Xylene	SW8260B	1	1.6	9.0	ND		ug/Kg	04/06/18	23:23	NP	430824
Styrene	SW8260B	1	1.5	9.0	ND		ug/Kg	04/06/18	23:23	NP	430824
Bromoform	SW8260B	1	1.5	9.0	ND		ug/Kg	04/06/18	23:23	NP	430824
Isopropyl Benzene	SW8260B	1	1.5	9.0	ND		ug/Kg	04/06/18	23:23	NP	430824
n-Propylbenzene	SW8260B	1	1.4	9.0	ND		ug/Kg	04/06/18	23:23	NP	430824
Bromobenzene	SW8260B	1	1.6	9.0	ND		ug/Kg	04/06/18	23:23	NP	430824
1,1,2,2-Tetrachloroethane	SW8260B	1	1.7	9.0	ND		ug/Kg	04/06/18	23:23	NP	430824
2-Chlorotoluene	SW8260B	1	1.6	9.0	ND		ug/Kg	04/06/18	23:23	NP	430824
1,3,5-Trimethylbenzene	SW8260B	1	1.4	9.0	ND		ug/Kg	04/06/18	23:23	NP	430824
1,2,3-Trichloropropane	SW8260B	1	1.7	9.0	ND		ug/Kg	04/06/18	23:23	NP	430824
4-Chlorotoluene	SW8260B	1	1.5	9.0	ND		ug/Kg	04/06/18	23:23	NP	430824
tert-Butylbenzene	SW8260B	1	1.5	9.0	ND		ug/Kg	04/06/18	23:23	NP	430824
1,2,4-Trimethylbenzene	SW8260B	1	1.2	9.0	ND		ug/Kg	04/06/18	23:23	NP	430824
sec-Butyl Benzene	SW8260B	1	1.4	9.0	ND		ug/Kg	04/06/18	23:23	NP	430824
p-Isopropyltoluene	SW8260B	1	1.3	9.0	ND		ug/Kg	04/06/18	23:23	NP	430824
1,3-Dichlorobenzene	SW8260B	1	1.5	9.0	ND		ug/Kg	04/06/18	23:23	NP	430824
1,4-Dichlorobenzene	SW8260B	1	1.5	9.0	ND		ug/Kg	04/06/18	23:23	NP	430824
n-Butylbenzene	SW8260B	1	1.3	9.0	ND		ug/Kg	04/06/18	23:23	NP	430824
1,2-Dichlorobenzene	SW8260B	1	1.6	9.0	ND		ug/Kg	04/06/18	23:23	NP	430824
1,2-Dibromo-3-Chloropropane	SW8260B	1	1.7	9.0	ND		ug/Kg	04/06/18	23:23	NP	430824
Hexachlorobutadiene	SW8260B	1	1.2	9.0	ND		ug/Kg	04/06/18	23:23	NP	430824
1,2,4-Trichlorobenzene	SW8260B	1	1.3	9.0	ND		ug/Kg	04/06/18	23:23	NP	430824
Naphthalene	SW8260B	1	1.5	9.0	ND		ug/Kg	04/06/18	23:23	NP	430824
1,2,3-Trichlorobenzene	SW8260B	1	1.5	9.0	ND		ug/Kg	04/06/18	23:23	NP	430824
2-Butanone	SW8260B	1	2.1	9.0	ND		ug/Kg	04/06/18	23:23	NP	430824
(S) Dibromofluoromethane	SW8260B		59.8 - 148		**113**		%	04/06/18	23:23	NP	430824
(S) Toluene-d8	SW8260B		55.2 - 133		**109**		%	04/06/18	23:23	NP	430824
(S) 4-Bromofluorobenzene	SW8260B		55.8 - 141		**118**		%	04/06/18	23:23	NP	430824

Prep Method:	5035GRO	**Prep Batch Date/Time:**	4/6/18	8:22:00PM
Prep Batch ID:	1104077	**Prep Analyst:**	NPAR	

Torrent LABORATORY, INC.

SAMPLE RESULTS

Report prepared for: Peter Langtry
Cornerstone Earth Group

Date/Time Received: 04/04/18, 4:15 pm
Date Reported: 04/09/18

Client Sample ID:	EB-16 (14.5-15)	**Lab Sample ID:**	1804038-010B
Project Name/Location:	1433-1493 El Camino Real	**Sample Matrix:**	Soil
Project Number:	958-1-5		
Date/Time Sampled:	04/04/18 / 10:54		
SDG:			

Prep Method:	5035GRO	**Prep Batch Date/Time:**	4/6/18	8:22:00PM
Prep Batch ID:	1104077	**Prep Analyst:**	NPAR	

Parameters:	Analysis Method	DF	MDL	PQL	Results	Q	Units	Analyzed	Time	By	Analytical Batch
TPH(Gasoline)	8260TPH	1	39	90	ND		ug/Kg	04/06/18	23:23	NP	430824
(S) 4-Bromofluorobenzene	8260TPH		43.9 - 127		**102**		%	04/06/18	23:23	NP	430824

Torrent LABORATORY, INC.

SAMPLE RESULTS

Report prepared for: Peter Langtry
Cornerstone Earth Group

Date/Time Received: 04/04/18, 4:15 pm
Date Reported: 04/09/18

Client Sample ID:	EB-17 (4.5-5)	**Lab Sample ID:**	1804038-012A
Project Name/Location:	1433-1493 El Camino Real	**Sample Matrix:**	Soil
Project Number:	958-1-5		
Date/Time Sampled:	04/04/18 / 11:31		
SDG:			

Prep Method:	3546_TPH	**Prep Batch Date/Time:**	4/4/18 3:18:00PM
Prep Batch ID:	1103958	**Prep Analyst:**	SNARASIMHAN

Parameters:	Analysis Method	DF	MDL	PQL	Results	Q	Units	Analyzed	Time	By	Analytical Batch
TPH as Diesel	SW8015B	1	0.85	2.0	**2.33**	x	mg/Kg	04/06/18	4:45	mk	430765
			Acceptance Limits								
Pentacosane (S)	SW8015B		59 - 129		**87.6**		%	04/06/18	4:45	mk	430765

NOTE: x-not typical of Diesel ref. std: peaks within Diesel range quantified as diesel

Torrent LABORATORY, INC.

SAMPLE RESULTS

Report prepared for: Peter Langtry
Cornerstone Earth Group

Date/Time Received: 04/04/18, 4:15 pm
Date Reported: 04/09/18

Client Sample ID:	EB-17 (4.5-5)	**Lab Sample ID:**	1804038-012B
Project Name/Location:	1433-1493 El Camino Real	**Sample Matrix:**	Soil
Project Number:	958-1-5		
Date/Time Sampled:	04/04/18 / 11:31		
SDG:			

Prep Method:	5035	**Prep Batch Date/Time:**	4/6/18	8:22:00PM
Prep Batch ID:	1104076	**Prep Analyst:**	NPAR	

Parameters:	Analysis Method	DF	MDL	PQL	Results	Q	Units	Analyzed	Time	By	Analytical Batch
Dichlorodifluoromethane	SW8260B	1	1.2	10	ND		ug/Kg	04/06/18	23:59	NP	430824
Chloromethane	SW8260B	1	1.8	10	ND		ug/Kg	04/06/18	23:59	NP	430824
Vinyl Chloride	SW8260B	1	2.1	10	ND		ug/Kg	04/06/18	23:59	NP	430824
Bromomethane	SW8260B	1	2.7	10	ND		ug/Kg	04/06/18	23:59	NP	430824
Chloroethane	SW8260B	1	3.0	10	ND		ug/Kg	04/06/18	23:59	NP	430824
Trichlorofluoromethane	SW8260B	1	2.1	10	ND		ug/Kg	04/06/18	23:59	NP	430824
1,1-Dichloroethene	SW8260B	1	2.0	10	ND		ug/Kg	04/06/18	23:59	NP	430824
Freon 113	SW8260B	1	1.9	10	ND		ug/Kg	04/06/18	23:59	NP	430824
Methylene Chloride	SW8260B	1	7.1	10	ND		ug/Kg	04/06/18	23:59	NP	430824
trans-1,2-Dichloroethene	SW8260B	1	2.1	10	ND		ug/Kg	04/06/18	23:59	NP	430824
MTBE	SW8260B	1	2.4	10	ND		ug/Kg	04/06/18	23:59	NP	430824
tert-Butanol	SW8260B	1	12	50	**498**		ug/Kg	04/06/18	23:59	NP	430824
Diisopropyl ether (DIPE)	SW8260B	1	2.3	10	ND		ug/Kg	04/06/18	23:59	NP	430824
1,1-Dichloroethane	SW8260B	1	2.2	10	ND		ug/Kg	04/06/18	23:59	NP	430824
ETBE	SW8260B	1	2.3	10	ND		ug/Kg	04/06/18	23:59	NP	430824
cis-1,2-Dichloroethene	SW8260B	1	2.2	10	ND		ug/Kg	04/06/18	23:59	NP	430824
2,2-Dichloropropane	SW8260B	1	1.9	10	ND		ug/Kg	04/06/18	23:59	NP	430824
Bromochloromethane	SW8260B	1	2.3	10	ND		ug/Kg	04/06/18	23:59	NP	430824
Chloroform	SW8260B	1	2.4	10	ND		ug/Kg	04/06/18	23:59	NP	430824
Carbon Tetrachloride	SW8260B	1	2.1	10	ND		ug/Kg	04/06/18	23:59	NP	430824
1,1,1-Trichloroethane	SW8260B	1	2.1	10	ND		ug/Kg	04/06/18	23:59	NP	430824
1,1-Dichloropropene	SW8260B	1	2.0	10	ND		ug/Kg	04/06/18	23:59	NP	430824
Benzene	SW8260B	1	2.2	10	ND		ug/Kg	04/06/18	23:59	NP	430824
TAME	SW8260B	1	2.3	10	ND		ug/Kg	04/06/18	23:59	NP	430824
1,2-Dichloroethane	SW8260B	1	2.3	10	ND		ug/Kg	04/06/18	23:59	NP	430824
Trichloroethylene	SW8260B	1	1.8	10	ND		ug/Kg	04/06/18	23:59	NP	430824
Dibromomethane	SW8260B	1	1.8	10	ND		ug/Kg	04/06/18	23:59	NP	430824
1,2-Dichloropropane	SW8260B	1	1.9	10	ND		ug/Kg	04/06/18	23:59	NP	430824
Bromodichloromethane	SW8260B	1	2.0	10	ND		ug/Kg	04/06/18	23:59	NP	430824
cis-1,3-Dichloropropene	SW8260B	1	1.6	10	ND		ug/Kg	04/06/18	23:59	NP	430824
Toluene	SW8260B	1	1.8	10	ND		ug/Kg	04/06/18	23:59	NP	430824
Tetrachloroethylene	SW8260B	1	1.7	10	ND		ug/Kg	04/06/18	23:59	NP	430824
trans-1,3-Dichloropropene	SW8260B	1	1.7	10	ND		ug/Kg	04/06/18	23:59	NP	430824
1,1,2-Trichloroethane	SW8260B	1	1.8	10	ND		ug/Kg	04/06/18	23:59	NP	430824
Dibromochloromethane	SW8260B	1	1.9	10	ND		ug/Kg	04/06/18	23:59	NP	430824
1,3-Dichloropropane	SW8260B	1	1.8	10	ND		ug/Kg	04/06/18	23:59	NP	430824

Torrent LABORATORY, INC.

SAMPLE RESULTS

Report prepared for: Peter Langtry
Cornerstone Earth Group

Date/Time Received: 04/04/18, 4:15 pm
Date Reported: 04/09/18

Client Sample ID:	EB-17 (4.5-5)	**Lab Sample ID:**	1804038-012B
Project Name/Location:	1433-1493 El Camino Real	**Sample Matrix:**	Soil
Project Number:	958-1-5		
Date/Time Sampled:	04/04/18 / 11:31		
SDG:			

Prep Method:	5035	**Prep Batch Date/Time:**	4/6/18	8:22:00PM
Prep Batch ID:	1104076	**Prep Analyst:**	NPAR	

Parameters:	Analysis Method	DF	MDL	PQL	Results	Q	Units	Analyzed	Time	By	Analytical Batch
1,2-Dibromoethane	SW8260B	1	1.8	10	ND		ug/Kg	04/06/18	23:59	NP	430824
Chlorobenzene	SW8260B	1	1.8	10	ND		ug/Kg	04/06/18	23:59	NP	430824
Ethyl Benzene	SW8260B	1	1.7	10	ND		ug/Kg	04/06/18	23:59	NP	430824
1,1,1,2-Tetrachloroethane	SW8260B	1	1.9	10	ND		ug/Kg	04/06/18	23:59	NP	430824
m,p-Xylene	SW8260B	1	3.2	10	ND		ug/Kg	04/06/18	23:59	NP	430824
o-Xylene	SW8260B	1	1.7	10	ND		ug/Kg	04/06/18	23:59	NP	430824
Styrene	SW8260B	1	1.6	10	ND		ug/Kg	04/06/18	23:59	NP	430824
Bromoform	SW8260B	1	1.7	10	ND		ug/Kg	04/06/18	23:59	NP	430824
Isopropyl Benzene	SW8260B	1	1.6	10	ND		ug/Kg	04/06/18	23:59	NP	430824
n-Propylbenzene	SW8260B	1	1.6	10	ND		ug/Kg	04/06/18	23:59	NP	430824
Bromobenzene	SW8260B	1	1.8	10	ND		ug/Kg	04/06/18	23:59	NP	430824
1,1,2,2-Tetrachloroethane	SW8260B	1	1.9	10	ND		ug/Kg	04/06/18	23:59	NP	430824
2-Chlorotoluene	SW8260B	1	1.8	10	ND		ug/Kg	04/06/18	23:59	NP	430824
1,3,5-Trimethylbenzene	SW8260B	1	1.6	10	ND		ug/Kg	04/06/18	23:59	NP	430824
1,2,3-Trichloropropane	SW8260B	1	1.9	10	ND		ug/Kg	04/06/18	23:59	NP	430824
4-Chlorotoluene	SW8260B	1	1.7	10	ND		ug/Kg	04/06/18	23:59	NP	430824
tert-Butylbenzene	SW8260B	1	1.6	10	ND		ug/Kg	04/06/18	23:59	NP	430824
1,2,4-Trimethylbenzene	SW8260B	1	1.4	10	ND		ug/Kg	04/06/18	23:59	NP	430824
sec-Butyl Benzene	SW8260B	1	1.6	10	ND		ug/Kg	04/06/18	23:59	NP	430824
p-Isopropyltoluene	SW8260B	1	1.5	10	ND		ug/Kg	04/06/18	23:59	NP	430824
1,3-Dichlorobenzene	SW8260B	1	1.7	10	ND		ug/Kg	04/06/18	23:59	NP	430824
1,4-Dichlorobenzene	SW8260B	1	1.7	10	ND		ug/Kg	04/06/18	23:59	NP	430824
n-Butylbenzene	SW8260B	1	1.5	10	ND		ug/Kg	04/06/18	23:59	NP	430824
1,2-Dichlorobenzene	SW8260B	1	1.8	10	ND		ug/Kg	04/06/18	23:59	NP	430824
1,2-Dibromo-3-Chloropropane	SW8260B	1	1.9	10	ND		ug/Kg	04/06/18	23:59	NP	430824
Hexachlorobutadiene	SW8260B	1	1.4	10	ND		ug/Kg	04/06/18	23:59	NP	430824
1,2,4-Trichlorobenzene	SW8260B	1	1.5	10	ND		ug/Kg	04/06/18	23:59	NP	430824
Naphthalene	SW8260B	1	1.7	10	ND		ug/Kg	04/06/18	23:59	NP	430824
1,2,3-Trichlorobenzene	SW8260B	1	1.7	10	ND		ug/Kg	04/06/18	23:59	NP	430824
2-Butanone	SW8260B	1	2.3	10	ND		ug/Kg	04/06/18	23:59	NP	430824
(S) Dibromofluoromethane	SW8260B		59.8 - 148		**120**		%	04/06/18	23:59	NP	430824
(S) Toluene-d8	SW8260B		55.2 - 133		**108**		%	04/06/18	23:59	NP	430824
(S) 4-Bromofluorobenzene	SW8260B		55.8 - 141		**116**		%	04/06/18	23:59	NP	430824

Prep Method:	5035GRO	**Prep Batch Date/Time:**	4/6/18	8:22:00PM
Prep Batch ID:	1104077	**Prep Analyst:**	NPAR	

Torrent LABORATORY, INC.

SAMPLE RESULTS

Report prepared for: Peter Langtry
Cornerstone Earth Group

Date/Time Received: 04/04/18, 4:15 pm
Date Reported: 04/09/18

Client Sample ID:	EB-17 (4.5-5)	**Lab Sample ID:**	1804038-012B
Project Name/Location:	1433-1493 El Camino Real	**Sample Matrix:**	Soil
Project Number:	958-1-5		
Date/Time Sampled:	04/04/18 / 11:31		
SDG:			

Prep Method:	5035GRO	**Prep Batch Date/Time:**	4/6/18	8:22:00PM
Prep Batch ID:	1104077	**Prep Analyst:**	NPAR	

Parameters:	Analysis Method	DF	MDL	PQL	Results	Q	Units	Analyzed	Time	By	Analytical Batch
TPH(Gasoline)	8260TPH	1	43	100	ND		ug/Kg	04/06/18	23:59	NP	430824
(S) 4-Bromofluorobenzene	8260TPH		43.9 - 127		**88.5**		%	04/06/18	23:59	NP	430824

Torrent LABORATORY, INC.

SAMPLE RESULTS

Report prepared for: Peter Langtry
Cornerstone Earth Group

Date/Time Received: 04/04/18, 4:15 pm
Date Reported: 04/09/18

Client Sample ID:	EB-17 (9.5-10)	**Lab Sample ID:**	1804038-013A
Project Name/Location:	1433-1493 El Camino Real	**Sample Matrix:**	Soil
Project Number:	958-1-5		
Date/Time Sampled:	04/04/18 / 11:33		
SDG:			

Prep Method:	3546_TPH	**Prep Batch Date/Time:**	4/4/18 3:18:00PM
Prep Batch ID:	1103958	**Prep Analyst:**	SNARASIMHAN

Parameters:	Analysis Method	DF	MDL	PQL	Results	Q	Units	Analyzed	Time	By	Analytical Batch
TPH as Diesel	SW8015B	1	0.85	2.0	**2.21**	x	mg/Kg	04/06/18	6:19	mk	430765
			Acceptance Limits								
Pentacosane (S)	SW8015B		59 - 129		**88.2**		%	04/06/18	6:19	mk	430765

NOTE: x-not typical of Diesel ref. std: peaks within Diesel range quantified as diesel

Torrent LABORATORY, INC.

SAMPLE RESULTS

Report prepared for: Peter Langtry
Cornerstone Earth Group

Date/Time Received: 04/04/18, 4:15 pm
Date Reported: 04/09/18

Client Sample ID:	EB-17 (9.5-10)	**Lab Sample ID:**	1804038-013B
Project Name/Location:	1433-1493 El Camino Real	**Sample Matrix:**	Soil
Project Number:	958-1-5		
Date/Time Sampled:	04/04/18 / 11:33		
SDG:			

Prep Method:	5035	**Prep Batch Date/Time:**	4/6/18	8:22:00PM
Prep Batch ID:	1104076	**Prep Analyst:**	NPAR	

Parameters:	Analysis Method	DF	MDL	PQL	Results	Q	Units	Analyzed	Time	By	Analytical Batch
Dichlorodifluoromethane	SW8260B	1	1.4	12	ND		ug/Kg	04/07/18	0:36	NP	430824
Chloromethane	SW8260B	1	2.1	12	ND		ug/Kg	04/07/18	0:36	NP	430824
Vinyl Chloride	SW8260B	1	2.4	12	ND		ug/Kg	04/07/18	0:36	NP	430824
Bromomethane	SW8260B	1	3.1	12	ND		ug/Kg	04/07/18	0:36	NP	430824
Chloroethane	SW8260B	1	3.5	12	ND		ug/Kg	04/07/18	0:36	NP	430824
Trichlorofluoromethane	SW8260B	1	2.4	12	ND		ug/Kg	04/07/18	0:36	NP	430824
1,1-Dichloroethene	SW8260B	1	2.4	12	ND		ug/Kg	04/07/18	0:36	NP	430824
Freon 113	SW8260B	1	2.2	12	ND		ug/Kg	04/07/18	0:36	NP	430824
Methylene Chloride	SW8260B	1	8.3	12	ND		ug/Kg	04/07/18	0:36	NP	430824
trans-1,2-Dichloroethene	SW8260B	1	2.4	12	ND		ug/Kg	04/07/18	0:36	NP	430824
MTBE	SW8260B	1	2.7	12	ND		ug/Kg	04/07/18	0:36	NP	430824
tert-Butanol	SW8260B	1	14	58	**174**		ug/Kg	04/07/18	0:36	NP	430824
Diisopropyl ether (DIPE)	SW8260B	1	2.7	12	ND		ug/Kg	04/07/18	0:36	NP	430824
1,1-Dichloroethane	SW8260B	1	2.6	12	ND		ug/Kg	04/07/18	0:36	NP	430824
ETBE	SW8260B	1	2.7	12	ND		ug/Kg	04/07/18	0:36	NP	430824
cis-1,2-Dichloroethene	SW8260B	1	2.6	12	ND		ug/Kg	04/07/18	0:36	NP	430824
2,2-Dichloropropane	SW8260B	1	2.2	12	ND		ug/Kg	04/07/18	0:36	NP	430824
Bromochloromethane	SW8260B	1	2.7	12	ND		ug/Kg	04/07/18	0:36	NP	430824
Chloroform	SW8260B	1	2.8	12	ND		ug/Kg	04/07/18	0:36	NP	430824
Carbon Tetrachloride	SW8260B	1	2.4	12	ND		ug/Kg	04/07/18	0:36	NP	430824
1,1,1-Trichloroethane	SW8260B	1	2.4	12	ND		ug/Kg	04/07/18	0:36	NP	430824
1,1-Dichloropropene	SW8260B	1	2.3	12	ND		ug/Kg	04/07/18	0:36	NP	430824
Benzene	SW8260B	1	2.6	12	ND		ug/Kg	04/07/18	0:36	NP	430824
TAME	SW8260B	1	2.6	12	ND		ug/Kg	04/07/18	0:36	NP	430824
1,2-Dichloroethane	SW8260B	1	2.7	12	ND		ug/Kg	04/07/18	0:36	NP	430824
Trichloroethylene	SW8260B	1	2.1	12	ND		ug/Kg	04/07/18	0:36	NP	430824
Dibromomethane	SW8260B	1	2.1	12	ND		ug/Kg	04/07/18	0:36	NP	430824
1,2-Dichloropropane	SW8260B	1	2.2	12	ND		ug/Kg	04/07/18	0:36	NP	430824
Bromodichloromethane	SW8260B	1	2.3	12	ND		ug/Kg	04/07/18	0:36	NP	430824
cis-1,3-Dichloropropene	SW8260B	1	1.9	12	ND		ug/Kg	04/07/18	0:36	NP	430824
Toluene	SW8260B	1	2.1	12	ND		ug/Kg	04/07/18	0:36	NP	430824
Tetrachloroethylene	SW8260B	1	1.9	12	ND		ug/Kg	04/07/18	0:36	NP	430824
trans-1,3-Dichloropropene	SW8260B	1	1.9	12	ND		ug/Kg	04/07/18	0:36	NP	430824
1,1,2-Trichloroethane	SW8260B	1	2.1	12	ND		ug/Kg	04/07/18	0:36	NP	430824
Dibromochloromethane	SW8260B	1	2.2	12	ND		ug/Kg	04/07/18	0:36	NP	430824
1,3-Dichloropropane	SW8260B	1	2.1	12	ND		ug/Kg	04/07/18	0:36	NP	430824

Torrent LABORATORY, INC.

SAMPLE RESULTS

Report prepared for: Peter Langtry
Cornerstone Earth Group

Date/Time Received: 04/04/18, 4:15 pm
Date Reported: 04/09/18

Client Sample ID:	EB-17 (9.5-10)	**Lab Sample ID:**	1804038-013B
Project Name/Location:	1433-1493 El Camino Real	**Sample Matrix:**	Soil
Project Number:	958-1-5		
Date/Time Sampled:	04/04/18 / 11:33		
SDG:			

Prep Method: 5035 **Prep Batch Date/Time:** 4/6/18 8:22:00PM
Prep Batch ID: 1104076 **Prep Analyst:** NPAR

Parameters:	Analysis Method	DF	MDL	PQL	Results	Q	Units	Analyzed	Time	By	Analytical Batch
1,2-Dibromoethane	SW8260B	1	2.1	12	ND		ug/Kg	04/07/18	0:36	NP	430824
Chlorobenzene	SW8260B	1	2.1	12	ND		ug/Kg	04/07/18	0:36	NP	430824
Ethyl Benzene	SW8260B	1	1.9	12	ND		ug/Kg	04/07/18	0:36	NP	430824
1,1,1,2-Tetrachloroethane	SW8260B	1	2.3	12	ND		ug/Kg	04/07/18	0:36	NP	430824
m,p-Xylene	SW8260B	1	3.7	12	ND		ug/Kg	04/07/18	0:36	NP	430824
o-Xylene	SW8260B	1	2.0	12	ND		ug/Kg	04/07/18	0:36	NP	430824
Styrene	SW8260B	1	1.9	12	ND		ug/Kg	04/07/18	0:36	NP	430824
Bromoform	SW8260B	1	2.0	12	ND		ug/Kg	04/07/18	0:36	NP	430824
Isopropyl Benzene	SW8260B	1	1.9	12	ND		ug/Kg	04/07/18	0:36	NP	430824
n-Propylbenzene	SW8260B	1	1.8	12	ND		ug/Kg	04/07/18	0:36	NP	430824
Bromobenzene	SW8260B	1	2.0	12	ND		ug/Kg	04/07/18	0:36	NP	430824
1,1,2,2-Tetrachloroethane	SW8260B	1	2.2	12	ND		ug/Kg	04/07/18	0:36	NP	430824
2-Chlorotoluene	SW8260B	1	2.1	12	ND		ug/Kg	04/07/18	0:36	NP	430824
1,3,5-Trimethylbenzene	SW8260B	1	1.8	12	ND		ug/Kg	04/07/18	0:36	NP	430824
1,2,3-Trichloropropane	SW8260B	1	2.2	12	ND		ug/Kg	04/07/18	0:36	NP	430824
4-Chlorotoluene	SW8260B	1	1.9	12	ND		ug/Kg	04/07/18	0:36	NP	430824
tert-Butylbenzene	SW8260B	1	1.9	12	ND		ug/Kg	04/07/18	0:36	NP	430824
1,2,4-Trimethylbenzene	SW8260B	1	1.6	12	ND		ug/Kg	04/07/18	0:36	NP	430824
sec-Butyl Benzene	SW8260B	1	1.8	12	ND		ug/Kg	04/07/18	0:36	NP	430824
p-Isopropyltoluene	SW8260B	1	1.7	12	ND		ug/Kg	04/07/18	0:36	NP	430824
1,3-Dichlorobenzene	SW8260B	1	1.9	12	ND		ug/Kg	04/07/18	0:36	NP	430824
1,4-Dichlorobenzene	SW8260B	1	2.0	12	ND		ug/Kg	04/07/18	0:36	NP	430824
n-Butylbenzene	SW8260B	1	1.7	12	ND		ug/Kg	04/07/18	0:36	NP	430824
1,2-Dichlorobenzene	SW8260B	1	2.1	12	ND		ug/Kg	04/07/18	0:36	NP	430824
1,2-Dibromo-3-Chloropropane	SW8260B	1	2.2	12	ND		ug/Kg	04/07/18	0:36	NP	430824
Hexachlorobutadiene	SW8260B	1	1.6	12	ND		ug/Kg	04/07/18	0:36	NP	430824
1,2,4-Trichlorobenzene	SW8260B	1	1.7	12	ND		ug/Kg	04/07/18	0:36	NP	430824
Naphthalene	SW8260B	1	2.0	12	ND		ug/Kg	04/07/18	0:36	NP	430824
1,2,3-Trichlorobenzene	SW8260B	1	2.0	12	ND		ug/Kg	04/07/18	0:36	NP	430824
2-Butanone	SW8260B	1	2.7	12	ND		ug/Kg	04/07/18	0:36	NP	430824
(S) Dibromofluoromethane	SW8260B		59.8 - 148		**113**		%	04/07/18	0:36	NP	430824
(S) Toluene-d8	SW8260B		55.2 - 133		**107**		%	04/07/18	0:36	NP	430824
(S) 4-Bromofluorobenzene	SW8260B		55.8 - 141		**113**		%	04/07/18	0:36	NP	430824

Prep Method: 5035GRO **Prep Batch Date/Time:** 4/6/18 8:22:00PM
Prep Batch ID: 1104077 **Prep Analyst:** NPAR

Torrent LABORATORY, INC.

SAMPLE RESULTS

Report prepared for: Peter Langtry
Cornerstone Earth Group

Date/Time Received: 04/04/18, 4:15 pm
Date Reported: 04/09/18

Client Sample ID:	EB-17 (9.5-10)	**Lab Sample ID:**	1804038-013B
Project Name/Location:	1433-1493 El Camino Real	**Sample Matrix:**	Soil
Project Number:	958-1-5		
Date/Time Sampled:	04/04/18 / 11:33		
SDG:			

Prep Method:	5035GRO	**Prep Batch Date/Time:**	4/6/18	8:22:00PM
Prep Batch ID:	1104077	**Prep Analyst:**	NPAR	

Parameters:	Analysis Method	DF	MDL	PQL	Results	Q	Units	Analyzed	Time	By	Analytical Batch
TPH(Gasoline)	8260TPH	1	50	120	ND		ug/Kg	04/07/18	0:36	NP	430824
(S) 4-Bromofluorobenzene	8260TPH		43.9 - 127		**115**		%	04/07/18	0:36	NP	430824

Torrent LABORATORY, INC.

SAMPLE RESULTS

Report prepared for: Peter Langtry
Cornerstone Earth Group

Date/Time Received: 04/04/18, 4:15 pm
Date Reported: 04/09/18

Client Sample ID:	EB-17 (14.5-15)	**Lab Sample ID:**	1804038-014A
Project Name/Location:	1433-1493 El Camino Real	**Sample Matrix:**	Soil
Project Number:	958-1-5		
Date/Time Sampled:	04/04/18 / 11:36		
SDG:			

Prep Method:	3546_TPH	**Prep Batch Date/Time:**	4/4/18 3:18:00PM
Prep Batch ID:	1103958	**Prep Analyst:**	SNARASIMHAN

Parameters:	Analysis Method	DF	MDL	PQL	Results	Q	Units	Analyzed	Time	By	Analytical Batch
TPH as Diesel	SW8015B	1	0.85	2.0	**35.1**	x	mg/Kg	04/06/18	6:42	mk	430765
			Acceptance Limits								
Pentacosane (S)	SW8015B		59 - 129		**95.2**		%	04/06/18	6:42	mk	430765

NOTE: x- Chromatographic pattern does not resemble typical diesel reference standard; unknown organics within diesel range lighter than diesel quantified as diesel.

Torrent LABORATORY, INC.

SAMPLE RESULTS

Report prepared for: Peter Langtry
Cornerstone Earth Group

Date/Time Received: 04/04/18, 4:15 pm
Date Reported: 04/09/18

Client Sample ID:	EB-17 (14.5-15)	**Lab Sample ID:**	1804038-014B
Project Name/Location:	1433-1493 El Camino Real	**Sample Matrix:**	Soil
Project Number:	958-1-5		
Date/Time Sampled:	04/04/18 / 11:36		
SDG:			

Prep Method:	5035	**Prep Batch Date/Time:**	4/6/18	8:22:00PM
Prep Batch ID:	1104076	**Prep Analyst:**	NPAR	

Parameters:	Analysis Method	DF	MDL	PQL	Results	Q	Units	Analyzed	Time	By	Analytical Batch
Dichlorodifluoromethane	SW8260B	1	1.3	11	ND		ug/Kg	04/07/18	1:12	NP	430824
Chloromethane	SW8260B	1	1.9	11	ND		ug/Kg	04/07/18	1:12	NP	430824
Vinyl Chloride	SW8260B	1	2.2	11	ND		ug/Kg	04/07/18	1:12	NP	430824
Bromomethane	SW8260B	1	2.9	11	ND		ug/Kg	04/07/18	1:12	NP	430824
Chloroethane	SW8260B	1	3.2	11	ND		ug/Kg	04/07/18	1:12	NP	430824
Trichlorofluoromethane	SW8260B	1	2.2	11	ND		ug/Kg	04/07/18	1:12	NP	430824
1,1-Dichloroethene	SW8260B	1	2.2	11	ND		ug/Kg	04/07/18	1:12	NP	430824
Freon 113	SW8260B	1	2.0	11	ND		ug/Kg	04/07/18	1:12	NP	430824
Methylene Chloride	SW8260B	1	7.6	11	ND		ug/Kg	04/07/18	1:12	NP	430824
trans-1,2-Dichloroethene	SW8260B	1	2.2	11	ND		ug/Kg	04/07/18	1:12	NP	430824
MTBE	SW8260B	1	2.5	11	ND		ug/Kg	04/07/18	1:12	NP	430824
tert-Butanol	SW8260B	1	12	53	**53.5**		ug/Kg	04/07/18	1:12	NP	430824
Diisopropyl ether (DIPE)	SW8260B	1	2.4	11	ND		ug/Kg	04/07/18	1:12	NP	430824
1,1-Dichloroethane	SW8260B	1	2.4	11	ND		ug/Kg	04/07/18	1:12	NP	430824
ETBE	SW8260B	1	2.4	11	ND		ug/Kg	04/07/18	1:12	NP	430824
cis-1,2-Dichloroethene	SW8260B	1	2.4	11	ND		ug/Kg	04/07/18	1:12	NP	430824
2,2-Dichloropropane	SW8260B	1	2.0	11	ND		ug/Kg	04/07/18	1:12	NP	430824
Bromochloromethane	SW8260B	1	2.5	11	ND		ug/Kg	04/07/18	1:12	NP	430824
Chloroform	SW8260B	1	2.5	11	ND		ug/Kg	04/07/18	1:12	NP	430824
Carbon Tetrachloride	SW8260B	1	2.2	11	ND		ug/Kg	04/07/18	1:12	NP	430824
1,1,1-Trichloroethane	SW8260B	1	2.2	11	ND		ug/Kg	04/07/18	1:12	NP	430824
1,1-Dichloropropene	SW8260B	1	2.1	11	ND		ug/Kg	04/07/18	1:12	NP	430824
Benzene	SW8260B	1	2.4	11	ND		ug/Kg	04/07/18	1:12	NP	430824
TAME	SW8260B	1	2.4	11	ND		ug/Kg	04/07/18	1:12	NP	430824
1,2-Dichloroethane	SW8260B	1	2.5	11	ND		ug/Kg	04/07/18	1:12	NP	430824
Trichloroethylene	SW8260B	1	1.9	11	ND		ug/Kg	04/07/18	1:12	NP	430824
Dibromomethane	SW8260B	1	2.0	11	ND		ug/Kg	04/07/18	1:12	NP	430824
1,2-Dichloropropane	SW8260B	1	2.0	11	ND		ug/Kg	04/07/18	1:12	NP	430824
Bromodichloromethane	SW8260B	1	2.1	11	ND		ug/Kg	04/07/18	1:12	NP	430824
cis-1,3-Dichloropropene	SW8260B	1	1.7	11	ND		ug/Kg	04/07/18	1:12	NP	430824
Toluene	SW8260B	1	1.9	11	ND		ug/Kg	04/07/18	1:12	NP	430824
Tetrachloroethylene	SW8260B	1	1.8	11	ND		ug/Kg	04/07/18	1:12	NP	430824
trans-1,3-Dichloropropene	SW8260B	1	1.8	11	ND		ug/Kg	04/07/18	1:12	NP	430824
1,1,2-Trichloroethane	SW8260B	1	2.0	11	ND		ug/Kg	04/07/18	1:12	NP	430824
Dibromochloromethane	SW8260B	1	2.0	11	ND		ug/Kg	04/07/18	1:12	NP	430824
1,3-Dichloropropane	SW8260B	1	2.0	11	ND		ug/Kg	04/07/18	1:12	NP	430824

Torrent LABORATORY, INC.

SAMPLE RESULTS

Report prepared for: Peter Langtry
Cornerstone Earth Group

Date/Time Received: 04/04/18, 4:15 pm
Date Reported: 04/09/18

Client Sample ID:	EB-17 (14.5-15)	**Lab Sample ID:**	1804038-014B
Project Name/Location:	1433-1493 El Camino Real	**Sample Matrix:**	Soil
Project Number:	958-1-5		
Date/Time Sampled:	04/04/18 / 11:36		
SDG:			

Prep Method:	5035	**Prep Batch Date/Time:**	4/6/18	8:22:00PM
Prep Batch ID:	1104076	**Prep Analyst:**	NPAR	

Parameters:	Analysis Method	DF	MDL	PQL	Results	Q	Units	Analyzed	Time	By	Analytical Batch
1,2-Dibromoethane	SW8260B	1	1.9	11	ND		ug/Kg	04/07/18	1:12	NP	430824
Chlorobenzene	SW8260B	1	1.9	11	ND		ug/Kg	04/07/18	1:12	NP	430824
Ethyl Benzene	SW8260B	1	1.8	11	ND		ug/Kg	04/07/18	1:12	NP	430824
1,1,1,2-Tetrachloroethane	SW8260B	1	2.1	11	ND		ug/Kg	04/07/18	1:12	NP	430824
m,p-Xylene	SW8260B	1	3.4	11	ND		ug/Kg	04/07/18	1:12	NP	430824
o-Xylene	SW8260B	1	1.8	11	ND		ug/Kg	04/07/18	1:12	NP	430824
Styrene	SW8260B	1	1.8	11	ND		ug/Kg	04/07/18	1:12	NP	430824
Bromoform	SW8260B	1	1.8	11	ND		ug/Kg	04/07/18	1:12	NP	430824
Isopropyl Benzene	SW8260B	1	1.7	11	ND		ug/Kg	04/07/18	1:12	NP	430824
n-Propylbenzene	SW8260B	1	1.7	11	ND		ug/Kg	04/07/18	1:12	NP	430824
Bromobenzene	SW8260B	1	1.9	11	ND		ug/Kg	04/07/18	1:12	NP	430824
1,1,2,2-Tetrachloroethane	SW8260B	1	2.1	11	ND		ug/Kg	04/07/18	1:12	NP	430824
2-Chlorotoluene	SW8260B	1	1.9	11	ND		ug/Kg	04/07/18	1:12	NP	430824
1,3,5-Trimethylbenzene	SW8260B	1	1.7	11	ND		ug/Kg	04/07/18	1:12	NP	430824
1,2,3-Trichloropropane	SW8260B	1	2.0	11	ND		ug/Kg	04/07/18	1:12	NP	430824
4-Chlorotoluene	SW8260B	1	1.8	11	ND		ug/Kg	04/07/18	1:12	NP	430824
tert-Butylbenzene	SW8260B	1	1.7	11	ND		ug/Kg	04/07/18	1:12	NP	430824
1,2,4-Trimethylbenzene	SW8260B	1	1.5	11	ND		ug/Kg	04/07/18	1:12	NP	430824
sec-Butyl Benzene	SW8260B	1	1.7	11	ND		ug/Kg	04/07/18	1:12	NP	430824
p-Isopropyltoluene	SW8260B	1	1.6	11	ND		ug/Kg	04/07/18	1:12	NP	430824
1,3-Dichlorobenzene	SW8260B	1	1.8	11	ND		ug/Kg	04/07/18	1:12	NP	430824
1,4-Dichlorobenzene	SW8260B	1	1.8	11	ND		ug/Kg	04/07/18	1:12	NP	430824
n-Butylbenzene	SW8260B	1	1.6	11	ND		ug/Kg	04/07/18	1:12	NP	430824
1,2-Dichlorobenzene	SW8260B	1	1.9	11	ND		ug/Kg	04/07/18	1:12	NP	430824
1,2-Dibromo-3-Chloropropane	SW8260B	1	2.0	11	ND		ug/Kg	04/07/18	1:12	NP	430824
Hexachlorobutadiene	SW8260B	1	1.5	11	ND		ug/Kg	04/07/18	1:12	NP	430824
1,2,4-Trichlorobenzene	SW8260B	1	1.6	11	ND		ug/Kg	04/07/18	1:12	NP	430824
Naphthalene	SW8260B	1	1.8	11	ND		ug/Kg	04/07/18	1:12	NP	430824
1,2,3-Trichlorobenzene	SW8260B	1	1.8	11	ND		ug/Kg	04/07/18	1:12	NP	430824
2-Butanone	SW8260B	1	2.4	11	ND		ug/Kg	04/07/18	1:12	NP	430824
(S) Dibromofluoromethane	SW8260B		59.8 - 148		**115**		%	04/07/18	1:12	NP	430824
(S) Toluene-d8	SW8260B		55.2 - 133		**112**		%	04/07/18	1:12	NP	430824
(S) 4-Bromofluorobenzene	SW8260B		55.8 - 141		**118**		%	04/07/18	1:12	NP	430824

Prep Method:	5035GRO	**Prep Batch Date/Time:**	4/6/18	8:22:00PM
Prep Batch ID:	1104077	**Prep Analyst:**	NPAR	

Torrent LABORATORY, INC.

SAMPLE RESULTS

Report prepared for: Peter Langtry
Cornerstone Earth Group

Date/Time Received: 04/04/18, 4:15 pm
Date Reported: 04/09/18

Client Sample ID:	EB-17 (14.5-15)	**Lab Sample ID:**	1804038-014B
Project Name/Location:	1433-1493 El Camino Real	**Sample Matrix:**	Soil
Project Number:	958-1-5		
Date/Time Sampled:	04/04/18 / 11:36		
SDG:			

Prep Method:	5035GRO	**Prep Batch Date/Time:**	4/6/18	8:22:00PM
Prep Batch ID:	1104077	**Prep Analyst:**	NPAR	

Parameters:	Analysis Method	DF	MDL	PQL	Results	Q	Units	Analyzed	Time	By	Analytical Batch
TPH(Gasoline)	8260TPH	1	46	110	**947**	x	ug/Kg	04/07/18	1:12	NP	430824
(S) 4-Bromofluorobenzene	8260TPH		43.9 - 127		**99.1**		%	04/07/18	1:12	NP	430824

NOTE: x - Does not match pattern of reference Gasoline standard. Reported value is the result of discrete peak (light end) of non-gasoline compounds within range of C5-C12 quantified as Gasoline.

Torrent LABORATORY, INC.

SAMPLE RESULTS

Report prepared for: Peter Langtry
Cornerstone Earth Group

Date/Time Received: 04/04/18, 4:15 pm
Date Reported: 04/09/18

Client Sample ID:	EB-19 (4.5-5)	**Lab Sample ID:**	1804038-017A
Project Name/Location:	1433-1493 El Camino Real	**Sample Matrix:**	Soil
Project Number:	958-1-5		
Date/Time Sampled:	04/04/18 / 12:03		
SDG:			

Prep Method:	3546_TPH	**Prep Batch Date/Time:**	4/4/18 3:18:00PM
Prep Batch ID:	1103958	**Prep Analyst:**	SNARASIMHAN

Parameters:	Analysis Method	DF	MDL	PQL	Results	Q	Units	Analyzed	Time	By	Analytical Batch
TPH as Diesel	SW8015B	1	0.85	2.0	ND		mg/Kg	04/06/18	7:05	mk	430765
			Acceptance Limits								
Pentacosane (S)	SW8015B		59 - 129		**102**		%	04/06/18	7:05	mk	430765

Torrent LABORATORY, INC.

SAMPLE RESULTS

Report prepared for: Peter Langtry
Cornerstone Earth Group

Date/Time Received: 04/04/18, 4:15 pm
Date Reported: 04/09/18

Client Sample ID:	EB-19 (4.5-5)	**Lab Sample ID:**	1804038-017B
Project Name/Location:	1433-1493 El Camino Real	**Sample Matrix:**	Soil
Project Number:	958-1-5		
Date/Time Sampled:	04/04/18 / 12:03		
SDG:			

Prep Method:	5035	**Prep Batch Date/Time:**	4/6/18	8:22:00PM
Prep Batch ID:	1104076	**Prep Analyst:**	NPAR	

Parameters:	Analysis Method	DF	MDL	PQL	Results	Q	Units	Analyzed	Time	By	Analytical Batch
Dichlorodifluoromethane	SW8260B	1	1.4	11	ND		ug/Kg	04/07/18	1:48	NP	430824
Chloromethane	SW8260B	1	2.1	11	ND		ug/Kg	04/07/18	1:48	NP	430824
Vinyl Chloride	SW8260B	1	2.3	11	ND		ug/Kg	04/07/18	1:48	NP	430824
Bromomethane	SW8260B	1	3.1	11	ND		ug/Kg	04/07/18	1:48	NP	430824
Chloroethane	SW8260B	1	3.4	11	ND		ug/Kg	04/07/18	1:48	NP	430824
Trichlorofluoromethane	SW8260B	1	2.3	11	ND		ug/Kg	04/07/18	1:48	NP	430824
1,1-Dichloroethene	SW8260B	1	2.3	11	ND		ug/Kg	04/07/18	1:48	NP	430824
Freon 113	SW8260B	1	2.1	11	ND		ug/Kg	04/07/18	1:48	NP	430824
Methylene Chloride	SW8260B	1	8.1	11	ND		ug/Kg	04/07/18	1:48	NP	430824
trans-1,2-Dichloroethene	SW8260B	1	2.4	11	ND		ug/Kg	04/07/18	1:48	NP	430824
MTBE	SW8260B	1	2.7	11	ND		ug/Kg	04/07/18	1:48	NP	430824
tert-Butanol	SW8260B	1	13	57	**332**		ug/Kg	04/07/18	1:48	NP	430824
Diisopropyl ether (DIPE)	SW8260B	1	2.6	11	ND		ug/Kg	04/07/18	1:48	NP	430824
1,1-Dichloroethane	SW8260B	1	2.5	11	ND		ug/Kg	04/07/18	1:48	NP	430824
ETBE	SW8260B	1	2.6	11	ND		ug/Kg	04/07/18	1:48	NP	430824
cis-1,2-Dichloroethene	SW8260B	1	2.5	11	ND		ug/Kg	04/07/18	1:48	NP	430824
2,2-Dichloropropane	SW8260B	1	2.2	11	ND		ug/Kg	04/07/18	1:48	NP	430824
Bromochloromethane	SW8260B	1	2.7	11	ND		ug/Kg	04/07/18	1:48	NP	430824
Chloroform	SW8260B	1	2.7	11	ND		ug/Kg	04/07/18	1:48	NP	430824
Carbon Tetrachloride	SW8260B	1	2.3	11	ND		ug/Kg	04/07/18	1:48	NP	430824
1,1,1-Trichloroethane	SW8260B	1	2.4	11	ND		ug/Kg	04/07/18	1:48	NP	430824
1,1-Dichloropropene	SW8260B	1	2.2	11	ND		ug/Kg	04/07/18	1:48	NP	430824
Benzene	SW8260B	1	2.5	11	ND		ug/Kg	04/07/18	1:48	NP	430824
TAME	SW8260B	1	2.6	11	ND		ug/Kg	04/07/18	1:48	NP	430824
1,2-Dichloroethane	SW8260B	1	2.6	11	ND		ug/Kg	04/07/18	1:48	NP	430824
Trichloroethylene	SW8260B	1	2.1	11	ND		ug/Kg	04/07/18	1:48	NP	430824
Dibromomethane	SW8260B	1	2.1	11	ND		ug/Kg	04/07/18	1:48	NP	430824
1,2-Dichloropropane	SW8260B	1	2.1	11	ND		ug/Kg	04/07/18	1:48	NP	430824
Bromodichloromethane	SW8260B	1	2.2	11	ND		ug/Kg	04/07/18	1:48	NP	430824
cis-1,3-Dichloropropene	SW8260B	1	1.8	11	ND		ug/Kg	04/07/18	1:48	NP	430824
Toluene	SW8260B	1	2.1	11	ND		ug/Kg	04/07/18	1:48	NP	430824
Tetrachloroethylene	SW8260B	1	1.9	11	ND		ug/Kg	04/07/18	1:48	NP	430824
trans-1,3-Dichloropropene	SW8260B	1	1.9	11	ND		ug/Kg	04/07/18	1:48	NP	430824
1,1,2-Trichloroethane	SW8260B	1	2.1	11	ND		ug/Kg	04/07/18	1:48	NP	430824
Dibromochloromethane	SW8260B	1	2.1	11	ND		ug/Kg	04/07/18	1:48	NP	430824
1,3-Dichloropropane	SW8260B	1	2.1	11	ND		ug/Kg	04/07/18	1:48	NP	430824

Torrent LABORATORY, INC.

SAMPLE RESULTS

Report prepared for: Peter Langtry
Cornerstone Earth Group

Date/Time Received: 04/04/18, 4:15 pm
Date Reported: 04/09/18

Client Sample ID:	EB-19 (4.5-5)	**Lab Sample ID:**	1804038-017B
Project Name/Location:	1433-1493 El Camino Real	**Sample Matrix:**	Soil
Project Number:	958-1-5		
Date/Time Sampled:	04/04/18 / 12:03		
SDG:			

Prep Method: 5035 **Prep Batch Date/Time:** 4/6/18 8:22:00PM
Prep Batch ID: 1104076 **Prep Analyst:** NPAR

Parameters:	Analysis Method	DF	MDL	PQL	Results	Q	Units	Analyzed	Time	By	Analytical Batch
1,2-Dibromoethane	SW8260B	1	2.1	11	ND		ug/Kg	04/07/18	1:48	NP	430824
Chlorobenzene	SW8260B	1	2.1	11	ND		ug/Kg	04/07/18	1:48	NP	430824
Ethyl Benzene	SW8260B	1	1.9	11	ND		ug/Kg	04/07/18	1:48	NP	430824
1,1,1,2-Tetrachloroethane	SW8260B	1	2.2	11	ND		ug/Kg	04/07/18	1:48	NP	430824
m,p-Xylene	SW8260B	1	3.6	11	ND		ug/Kg	04/07/18	1:48	NP	430824
o-Xylene	SW8260B	1	2.0	11	ND		ug/Kg	04/07/18	1:48	NP	430824
Styrene	SW8260B	1	1.9	11	ND		ug/Kg	04/07/18	1:48	NP	430824
Bromoform	SW8260B	1	1.9	11	ND		ug/Kg	04/07/18	1:48	NP	430824
Isopropyl Benzene	SW8260B	1	1.8	11	ND		ug/Kg	04/07/18	1:48	NP	430824
n-Propylbenzene	SW8260B	1	1.8	11	ND		ug/Kg	04/07/18	1:48	NP	430824
Bromobenzene	SW8260B	1	2.0	11	ND		ug/Kg	04/07/18	1:48	NP	430824
1,1,2,2-Tetrachloroethane	SW8260B	1	2.2	11	ND		ug/Kg	04/07/18	1:48	NP	430824
2-Chlorotoluene	SW8260B	1	2.0	11	ND		ug/Kg	04/07/18	1:48	NP	430824
1,3,5-Trimethylbenzene	SW8260B	1	1.8	11	ND		ug/Kg	04/07/18	1:48	NP	430824
1,2,3-Trichloropropane	SW8260B	1	2.2	11	ND		ug/Kg	04/07/18	1:48	NP	430824
4-Chlorotoluene	SW8260B	1	1.9	11	ND		ug/Kg	04/07/18	1:48	NP	430824
tert-Butylbenzene	SW8260B	1	1.8	11	ND		ug/Kg	04/07/18	1:48	NP	430824
1,2,4-Trimethylbenzene	SW8260B	1	1.5	11	ND		ug/Kg	04/07/18	1:48	NP	430824
sec-Butyl Benzene	SW8260B	1	1.8	11	ND		ug/Kg	04/07/18	1:48	NP	430824
p-Isopropyltoluene	SW8260B	1	1.7	11	ND		ug/Kg	04/07/18	1:48	NP	430824
1,3-Dichlorobenzene	SW8260B	1	1.9	11	ND		ug/Kg	04/07/18	1:48	NP	430824
1,4-Dichlorobenzene	SW8260B	1	1.9	11	ND		ug/Kg	04/07/18	1:48	NP	430824
n-Butylbenzene	SW8260B	1	1.7	11	ND		ug/Kg	04/07/18	1:48	NP	430824
1,2-Dichlorobenzene	SW8260B	1	2.0	11	ND		ug/Kg	04/07/18	1:48	NP	430824
1,2-Dibromo-3-Chloropropane	SW8260B	1	2.1	11	ND		ug/Kg	04/07/18	1:48	NP	430824
Hexachlorobutadiene	SW8260B	1	1.6	11	ND		ug/Kg	04/07/18	1:48	NP	430824
1,2,4-Trichlorobenzene	SW8260B	1	1.7	11	ND		ug/Kg	04/07/18	1:48	NP	430824
Naphthalene	SW8260B	1	1.9	11	ND		ug/Kg	04/07/18	1:48	NP	430824
1,2,3-Trichlorobenzene	SW8260B	1	1.9	11	ND		ug/Kg	04/07/18	1:48	NP	430824
2-Butanone	SW8260B	1	2.6	11	ND		ug/Kg	04/07/18	1:48	NP	430824
(S) Dibromofluoromethane	SW8260B		59.8 - 148		**116**		%	04/07/18	1:48	NP	430824
(S) Toluene-d8	SW8260B		55.2 - 133		**108**		%	04/07/18	1:48	NP	430824
(S) 4-Bromofluorobenzene	SW8260B		55.8 - 141		**123**		%	04/07/18	1:48	NP	430824

Prep Method: 5035GRO **Prep Batch Date/Time:** 4/6/18 8:22:00PM
Prep Batch ID: 1104077 **Prep Analyst:** NPAR

Torrent LABORATORY, INC.

SAMPLE RESULTS

Report prepared for: Peter Langtry
Cornerstone Earth Group

Date/Time Received: 04/04/18, 4:15 pm
Date Reported: 04/09/18

Client Sample ID:	EB-19 (4.5-5)	**Lab Sample ID:**	1804038-017B
Project Name/Location:	1433-1493 El Camino Real	**Sample Matrix:**	Soil
Project Number:	958-1-5		
Date/Time Sampled:	04/04/18 / 12:03		
SDG:			

Prep Method:	5035GRO	**Prep Batch Date/Time:**	4/6/18	8:22:00PM
Prep Batch ID:	1104077	**Prep Analyst:**	NPAR	

Parameters:	Analysis Method	DF	MDL	PQL	Results	Q	Units	Analyzed	Time	By	Analytical Batch
TPH(Gasoline)	8260TPH	1	49	110	ND		ug/Kg	04/07/18	1:48	NP	430824
(S) 4-Bromofluorobenzene	8260TPH		43.9 - 127		**96.4**		%	04/07/18	1:48	NP	430824

Torrent LABORATORY, INC.

SAMPLE RESULTS

Report prepared for: Peter Langtry
Cornerstone Earth Group

Date/Time Received: 04/04/18, 4:15 pm
Date Reported: 04/09/18

Client Sample ID:	EB-19 (9.5-10)	**Lab Sample ID:**	1804038-018A
Project Name/Location:	1433-1493 El Camino Real	**Sample Matrix:**	Soil
Project Number:	958-1-5		
Date/Time Sampled:	04/04/18 / 12:06		
SDG:			

Prep Method:	3546_TPH	**Prep Batch Date/Time:**	4/4/18 3:18:00PM
Prep Batch ID:	1103958	**Prep Analyst:**	SNARASIMHAN

Parameters:	Analysis Method	DF	MDL	PQL	Results	Q	Units	Analyzed	Time	By	Analytical Batch
TPH as Diesel	SW8015B	1	0.85	2.0	ND		mg/Kg	04/06/18	7:29	mk	430765
			Acceptance Limits								
Pentacosane (S)	SW8015B		59 - 129		**93.7**		%	04/06/18	7:29	mk	430765

Torrent LABORATORY, INC.

SAMPLE RESULTS

Report prepared for: Peter Langtry
Cornerstone Earth Group

Date/Time Received: 04/04/18, 4:15 pm
Date Reported: 04/09/18

Client Sample ID:	EB-19 (9.5-10)	**Lab Sample ID:**	1804038-018B
Project Name/Location:	1433-1493 El Camino Real	**Sample Matrix:**	Soil
Project Number:	958-1-5		
Date/Time Sampled:	04/04/18 / 12:06		
SDG:			

Prep Method:	5035	**Prep Batch Date/Time:**	4/9/18	9:22:00AM
Prep Batch ID:	1104109	**Prep Analyst:**	NPAR	

Parameters:	Analysis Method	DF	MDL	PQL	Results	Q	Units	Analyzed	Time	By	Analytical Batch
Dichlorodifluoromethane	SW8260B	1	1.6	13	ND		ug/Kg	04/09/18	17:25	NP	430855
Chloromethane	SW8260B	1	2.4	13	ND		ug/Kg	04/09/18	17:25	NP	430855
Vinyl Chloride	SW8260B	1	2.7	13	ND		ug/Kg	04/09/18	17:25	NP	430855
Bromomethane	SW8260B	1	3.5	13	ND		ug/Kg	04/09/18	17:25	NP	430855
Chloroethane	SW8260B	1	4.0	13	ND		ug/Kg	04/09/18	17:25	NP	430855
Trichlorofluoromethane	SW8260B	1	2.7	13	ND		ug/Kg	04/09/18	17:25	NP	430855
1,1-Dichloroethene	SW8260B	1	2.7	13	ND		ug/Kg	04/09/18	17:25	NP	430855
Freon 113	SW8260B	1	2.5	13	ND		ug/Kg	04/09/18	17:25	NP	430855
Methylene Chloride	SW8260B	1	9.3	13	ND		ug/Kg	04/09/18	17:25	NP	430855
trans-1,2-Dichloroethene	SW8260B	1	2.7	13	ND		ug/Kg	04/09/18	17:25	NP	430855
MTBE	SW8260B	1	3.1	13	ND		ug/Kg	04/09/18	17:25	NP	430855
tert-Butanol	SW8260B	1	15	66	**122**		ug/Kg	04/09/18	17:25	NP	430855
Diisopropyl ether (DIPE)	SW8260B	1	3.0	13	ND		ug/Kg	04/09/18	17:25	NP	430855
1,1-Dichloroethane	SW8260B	1	2.9	13	ND		ug/Kg	04/09/18	17:25	NP	430855
ETBE	SW8260B	1	3.0	13	ND		ug/Kg	04/09/18	17:25	NP	430855
cis-1,2-Dichloroethene	SW8260B	1	2.9	13	ND		ug/Kg	04/09/18	17:25	NP	430855
2,2-Dichloropropane	SW8260B	1	2.5	13	ND		ug/Kg	04/09/18	17:25	NP	430855
Bromochloromethane	SW8260B	1	3.1	13	ND		ug/Kg	04/09/18	17:25	NP	430855
Chloroform	SW8260B	1	3.1	13	ND		ug/Kg	04/09/18	17:25	NP	430855
Carbon Tetrachloride	SW8260B	1	2.7	13	ND		ug/Kg	04/09/18	17:25	NP	430855
1,1,1-Trichloroethane	SW8260B	1	2.8	13	ND		ug/Kg	04/09/18	17:25	NP	430855
1,1-Dichloropropene	SW8260B	1	2.6	13	ND		ug/Kg	04/09/18	17:25	NP	430855
Benzene	SW8260B	1	2.9	13	ND		ug/Kg	04/09/18	17:25	NP	430855
TAME	SW8260B	1	3.0	13	ND		ug/Kg	04/09/18	17:25	NP	430855
1,2-Dichloroethane	SW8260B	1	3.1	13	ND		ug/Kg	04/09/18	17:25	NP	430855
Trichloroethylene	SW8260B	1	2.4	13	ND		ug/Kg	04/09/18	17:25	NP	430855
Dibromomethane	SW8260B	1	2.4	13	ND		ug/Kg	04/09/18	17:25	NP	430855
1,2-Dichloropropane	SW8260B	1	2.5	13	ND		ug/Kg	04/09/18	17:25	NP	430855
Bromodichloromethane	SW8260B	1	2.6	13	ND		ug/Kg	04/09/18	17:25	NP	430855
cis-1,3-Dichloropropene	SW8260B	1	2.1	13	ND		ug/Kg	04/09/18	17:25	NP	430855
Toluene	SW8260B	1	2.4	13	ND		ug/Kg	04/09/18	17:25	NP	430855
Tetrachloroethylene	SW8260B	1	2.2	13	ND		ug/Kg	04/09/18	17:25	NP	430855
trans-1,3-Dichloropropene	SW8260B	1	2.2	13	ND		ug/Kg	04/09/18	17:25	NP	430855
1,1,2-Trichloroethane	SW8260B	1	2.4	13	ND		ug/Kg	04/09/18	17:25	NP	430855
Dibromochloromethane	SW8260B	1	2.5	13	ND		ug/Kg	04/09/18	17:25	NP	430855
1,3-Dichloropropane	SW8260B	1	2.4	13	ND		ug/Kg	04/09/18	17:25	NP	430855

Torrent LABORATORY, INC.

SAMPLE RESULTS

Report prepared for: Peter Langtry
Cornerstone Earth Group

Date/Time Received: 04/04/18, 4:15 pm
Date Reported: 04/09/18

Client Sample ID:	EB-19 (9.5-10)	**Lab Sample ID:**	1804038-018B
Project Name/Location:	1433-1493 El Camino Real	**Sample Matrix:**	Soil
Project Number:	958-1-5		
Date/Time Sampled:	04/04/18 / 12:06		
SDG:			

Prep Method:	5035	**Prep Batch Date/Time:**	4/9/18	9:22:00AM
Prep Batch ID:	1104109	**Prep Analyst:**	NPAR	

Parameters:	Analysis Method	DF	MDL	PQL	Results	Q	Units	Analyzed	Time	By	Analytical Batch
1,2-Dibromoethane	SW8260B	1	2.4	13	ND		ug/Kg	04/09/18	17:25	NP	430855
Chlorobenzene	SW8260B	1	2.4	13	ND		ug/Kg	04/09/18	17:25	NP	430855
Ethyl Benzene	SW8260B	1	2.2	13	ND		ug/Kg	04/09/18	17:25	NP	430855
1,1,1,2-Tetrachloroethane	SW8260B	1	2.5	13	ND		ug/Kg	04/09/18	17:25	NP	430855
m,p-Xylene	SW8260B	1	4.2	13	ND		ug/Kg	04/09/18	17:25	NP	430855
o-Xylene	SW8260B	1	2.3	13	ND		ug/Kg	04/09/18	17:25	NP	430855
Styrene	SW8260B	1	2.2	13	ND		ug/Kg	04/09/18	17:25	NP	430855
Bromoform	SW8260B	1	2.2	13	ND		ug/Kg	04/09/18	17:25	NP	430855
Isopropyl Benzene	SW8260B	1	2.1	13	ND		ug/Kg	04/09/18	17:25	NP	430855
n-Propylbenzene	SW8260B	1	2.1	13	ND		ug/Kg	04/09/18	17:25	NP	430855
Bromobenzene	SW8260B	1	2.3	13	ND		ug/Kg	04/09/18	17:25	NP	430855
1,1,2,2-Tetrachloroethane	SW8260B	1	2.5	13	ND		ug/Kg	04/09/18	17:25	NP	430855
2-Chlorotoluene	SW8260B	1	2.3	13	ND		ug/Kg	04/09/18	17:25	NP	430855
1,3,5-Trimethylbenzene	SW8260B	1	2.1	13	ND		ug/Kg	04/09/18	17:25	NP	430855
1,2,3-Trichloropropane	SW8260B	1	2.5	13	ND		ug/Kg	04/09/18	17:25	NP	430855
4-Chlorotoluene	SW8260B	1	2.2	13	ND		ug/Kg	04/09/18	17:25	NP	430855
tert-Butylbenzene	SW8260B	1	2.1	13	ND		ug/Kg	04/09/18	17:25	NP	430855
1,2,4-Trimethylbenzene	SW8260B	1	1.8	13	ND		ug/Kg	04/09/18	17:25	NP	430855
sec-Butyl Benzene	SW8260B	1	2.0	13	ND		ug/Kg	04/09/18	17:25	NP	430855
p-Isopropyltoluene	SW8260B	1	1.9	13	ND		ug/Kg	04/09/18	17:25	NP	430855
1,3-Dichlorobenzene	SW8260B	1	2.2	13	ND		ug/Kg	04/09/18	17:25	NP	430855
1,4-Dichlorobenzene	SW8260B	1	2.3	13	ND		ug/Kg	04/09/18	17:25	NP	430855
n-Butylbenzene	SW8260B	1	1.9	13	ND		ug/Kg	04/09/18	17:25	NP	430855
1,2-Dichlorobenzene	SW8260B	1	2.3	13	ND		ug/Kg	04/09/18	17:25	NP	430855
1,2-Dibromo-3-Chloropropane	SW8260B	1	2.4	13	ND		ug/Kg	04/09/18	17:25	NP	430855
Hexachlorobutadiene	SW8260B	1	1.8	13	ND		ug/Kg	04/09/18	17:25	NP	430855
1,2,4-Trichlorobenzene	SW8260B	1	1.9	13	ND		ug/Kg	04/09/18	17:25	NP	430855
Naphthalene	SW8260B	1	2.2	13	ND		ug/Kg	04/09/18	17:25	NP	430855
1,2,3-Trichlorobenzene	SW8260B	1	2.2	13	ND		ug/Kg	04/09/18	17:25	NP	430855
2-Butanone	SW8260B	1	3.0	13	ND		ug/Kg	04/09/18	17:25	NP	430855
(S) Dibromofluoromethane	SW8260B		59.8 - 148		**110**		%	04/09/18	17:25	NP	430855
(S) Toluene-d8	SW8260B		55.2 - 133		**105**		%	04/09/18	17:25	NP	430855
(S) 4-Bromofluorobenzene	SW8260B		55.8 - 141		**112**		%	04/09/18	17:25	NP	430855

Prep Method:	5035GRO	**Prep Batch Date/Time:**	4/6/18	8:22:00PM
Prep Batch ID:	1104077	**Prep Analyst:**	NPAR	

Torrent LABORATORY, INC.

SAMPLE RESULTS

Report prepared for: Peter Langtry
Cornerstone Earth Group

Date/Time Received: 04/04/18, 4:15 pm
Date Reported: 04/09/18

Client Sample ID:	EB-19 (9.5-10)	**Lab Sample ID:**	1804038-018B
Project Name/Location:	1433-1493 El Camino Real	**Sample Matrix:**	Soil
Project Number:	958-1-5		
Date/Time Sampled:	04/04/18 / 12:06		
SDG:			

Prep Method:	5035GRO	**Prep Batch Date/Time:**	4/6/18	8:22:00PM
Prep Batch ID:	1104077	**Prep Analyst:**	NPAR	

Parameters:	Analysis Method	DF	MDL	PQL	Results	Q	Units	Analyzed	Time	By	Analytical Batch
TPH(Gasoline)	8260TPH	1	48	110	ND		ug/Kg	04/07/18	2:25	NP	430824
(S) 4-Bromofluorobenzene	8260TPH		43.9 - 127		**70.7**		%	04/07/18	2:25	NP	430824

Torrent LABORATORY, INC.

SAMPLE RESULTS

Report prepared for: Peter Langtry
Cornerstone Earth Group

Date/Time Received: 04/04/18, 4:15 pm
Date Reported: 04/09/18

Client Sample ID:	EB-19 (16.5-17)	**Lab Sample ID:**	1804038-019A
Project Name/Location:	1433-1493 El Camino Real	**Sample Matrix:**	Soil
Project Number:	958-1-5		
Date/Time Sampled:	04/04/18 / 12:09		
SDG:			

Prep Method:	3546_TPH	**Prep Batch Date/Time:**	4/4/18 3:18:00PM
Prep Batch ID:	1103958	**Prep Analyst:**	SNARASIMHAN

Parameters:	Analysis Method	DF	MDL	PQL	Results	Q	Units	Analyzed	Time	By	Analytical Batch
TPH as Diesel	SW8015B	1	0.85	2.0	**42.5**	x	mg/Kg	04/06/18	7:52	mk	430765
			Acceptance Limits								
Pentacosane (S)	SW8015B		59 - 129		**105**		%	04/06/18	7:52	mk	430765

NOTE: x- Chromatographic pattern does not resemble typical diesel reference standard; unknown organics within diesel range lighter than diesel quantified as diesel.

Torrent LABORATORY, INC.

SAMPLE RESULTS

Report prepared for: Peter Langtry
Cornerstone Earth Group

Date/Time Received: 04/04/18, 4:15 pm
Date Reported: 04/09/18

Client Sample ID:	EB-19 (16.5-17)	**Lab Sample ID:**	1804038-019B
Project Name/Location:	1433-1493 El Camino Real	**Sample Matrix:**	Soil
Project Number:	958-1-5		
Date/Time Sampled:	04/04/18 / 12:09		
SDG:			

Prep Method:	5035	**Prep Batch Date/Time:**	4/6/18	8:22:00PM
Prep Batch ID:	1104076	**Prep Analyst:**	NPAR	

Parameters:	Analysis Method	DF	MDL	PQL	Results	Q	Units	Analyzed	Time	By	Analytical Batch
Dichlorodifluoromethane	SW8260B	100	120	950	ND		ug/Kg	04/07/18	4:50	NP	430824
Chloromethane	SW8260B	100	170	950	ND		ug/Kg	04/07/18	4:50	NP	430824
Vinyl Chloride	SW8260B	100	200	950	ND		ug/Kg	04/07/18	4:50	NP	430824
Bromomethane	SW8260B	100	260	950	ND		ug/Kg	04/07/18	4:50	NP	430824
Chloroethane	SW8260B	100	290	950	ND		ug/Kg	04/07/18	4:50	NP	430824
Trichlorofluoromethane	SW8260B	100	200	950	ND		ug/Kg	04/07/18	4:50	NP	430824
1,1-Dichloroethene	SW8260B	100	190	950	ND		ug/Kg	04/07/18	4:50	NP	430824
Freon 113	SW8260B	100	180	950	ND		ug/Kg	04/07/18	4:50	NP	430824
Methylene Chloride	SW8260B	100	680	950	ND		ug/Kg	04/07/18	4:50	NP	430824
trans-1,2-Dichloroethene	SW8260B	100	200	950	ND		ug/Kg	04/07/18	4:50	NP	430824
MTBE	SW8260B	100	220	950	ND		ug/Kg	04/07/18	4:50	NP	430824
tert-Butanol	SW8260B	100	1100	4800	ND		ug/Kg	04/07/18	4:50	NP	430824
Diisopropyl ether (DIPE)	SW8260B	100	220	950	ND		ug/Kg	04/07/18	4:50	NP	430824
1,1-Dichloroethane	SW8260B	100	210	950	ND		ug/Kg	04/07/18	4:50	NP	430824
ETBE	SW8260B	100	220	950	ND		ug/Kg	04/07/18	4:50	NP	430824
cis-1,2-Dichloroethene	SW8260B	100	210	950	ND		ug/Kg	04/07/18	4:50	NP	430824
2,2-Dichloropropane	SW8260B	100	180	950	ND		ug/Kg	04/07/18	4:50	NP	430824
Bromochloromethane	SW8260B	100	220	950	ND		ug/Kg	04/07/18	4:50	NP	430824
Chloroform	SW8260B	100	230	950	ND		ug/Kg	04/07/18	4:50	NP	430824
Carbon Tetrachloride	SW8260B	100	200	950	ND		ug/Kg	04/07/18	4:50	NP	430824
1,1,1-Trichloroethane	SW8260B	100	200	950	ND		ug/Kg	04/07/18	4:50	NP	430824
1,1-Dichloropropene	SW8260B	100	190	950	ND		ug/Kg	04/07/18	4:50	NP	430824
Benzene	SW8260B	100	210	950	ND		ug/Kg	04/07/18	4:50	NP	430824
TAME	SW8260B	100	220	950	ND		ug/Kg	04/07/18	4:50	NP	430824
1,2-Dichloroethane	SW8260B	100	220	950	ND		ug/Kg	04/07/18	4:50	NP	430824
Trichloroethylene	SW8260B	100	170	950	ND		ug/Kg	04/07/18	4:50	NP	430824
Dibromomethane	SW8260B	100	180	950	ND		ug/Kg	04/07/18	4:50	NP	430824
1,2-Dichloropropane	SW8260B	100	180	950	ND		ug/Kg	04/07/18	4:50	NP	430824
Bromodichloromethane	SW8260B	100	190	950	ND		ug/Kg	04/07/18	4:50	NP	430824
cis-1,3-Dichloropropene	SW8260B	100	150	950	ND		ug/Kg	04/07/18	4:50	NP	430824
Toluene	SW8260B	100	170	950	ND		ug/Kg	04/07/18	4:50	NP	430824
Tetrachloroethylene	SW8260B	100	160	950	ND		ug/Kg	04/07/18	4:50	NP	430824
trans-1,3-Dichloropropene	SW8260B	100	160	950	ND		ug/Kg	04/07/18	4:50	NP	430824
1,1,2-Trichloroethane	SW8260B	100	180	950	ND		ug/Kg	04/07/18	4:50	NP	430824
Dibromochloromethane	SW8260B	100	180	950	ND		ug/Kg	04/07/18	4:50	NP	430824
1,3-Dichloropropane	SW8260B	100	170	950	ND		ug/Kg	04/07/18	4:50	NP	430824

Torrent LABORATORY, INC.

SAMPLE RESULTS

Report prepared for: Peter Langtry
Cornerstone Earth Group

Date/Time Received: 04/04/18, 4:15 pm
Date Reported: 04/09/18

Client Sample ID:	EB-19 (16.5-17)	**Lab Sample ID:**	1804038-019B
Project Name/Location:	1433-1493 El Camino Real	**Sample Matrix:**	Soil
Project Number:	958-1-5		
Date/Time Sampled:	04/04/18 / 12:09		
SDG:			

Prep Method:	5035	**Prep Batch Date/Time:**	4/6/18	8:22:00PM
Prep Batch ID:	1104076	**Prep Analyst:**	NPAR	

Parameters:	Analysis Method	DF	MDL	PQL	Results	Q	Units	Analyzed	Time	By	Analytical Batch
1,2-Dibromoethane	SW8260B	100	170	950	ND		ug/Kg	04/07/18	4:50	NP	430824
Chlorobenzene	SW8260B	100	170	950	ND		ug/Kg	04/07/18	4:50	NP	430824
Ethyl Benzene	SW8260B	100	160	950	**6050**		ug/Kg	04/07/18	4:50	NP	430824
1,1,1,2-Tetrachloroethane	SW8260B	100	180	950	ND		ug/Kg	04/07/18	4:50	NP	430824
m,p-Xylene	SW8260B	100	300	950	**14300**		ug/Kg	04/07/18	4:50	NP	430824
o-Xylene	SW8260B	100	160	950	**6120**		ug/Kg	04/07/18	4:50	NP	430824
Styrene	SW8260B	100	160	950	ND		ug/Kg	04/07/18	4:50	NP	430824
Bromoform	SW8260B	100	160	950	ND		ug/Kg	04/07/18	4:50	NP	430824
Isopropyl Benzene	SW8260B	100	150	950	**1030**		ug/Kg	04/07/18	4:50	NP	430824
n-Propylbenzene	SW8260B	100	150	950	**3210**		ug/Kg	04/07/18	4:50	NP	430824
Bromobenzene	SW8260B	100	170	950	ND		ug/Kg	04/07/18	4:50	NP	430824
1,1,2,2-Tetrachloroethane	SW8260B	100	180	950	ND		ug/Kg	04/07/18	4:50	NP	430824
2-Chlorotoluene	SW8260B	100	170	950	ND		ug/Kg	04/07/18	4:50	NP	430824
1,3,5-Trimethylbenzene	SW8260B	100	150	950	**4390**		ug/Kg	04/07/18	4:50	NP	430824
1,2,3-Trichloropropane	SW8260B	100	180	950	ND		ug/Kg	04/07/18	4:50	NP	430824
4-Chlorotoluene	SW8260B	100	160	950	ND		ug/Kg	04/07/18	4:50	NP	430824
tert-Butylbenzene	SW8260B	100	150	950	ND		ug/Kg	04/07/18	4:50	NP	430824
1,2,4-Trimethylbenzene	SW8260B	100	130	950	**15500**		ug/Kg	04/07/18	4:50	NP	430824
sec-Butyl Benzene	SW8260B	100	150	950	ND		ug/Kg	04/07/18	4:50	NP	430824
p-Isopropyltoluene	SW8260B	100	140	950	ND		ug/Kg	04/07/18	4:50	NP	430824
1,3-Dichlorobenzene	SW8260B	100	160	950	ND		ug/Kg	04/07/18	4:50	NP	430824
1,4-Dichlorobenzene	SW8260B	100	160	950	ND		ug/Kg	04/07/18	4:50	NP	430824
n-Butylbenzene	SW8260B	100	140	950	ND		ug/Kg	04/07/18	4:50	NP	430824
1,2-Dichlorobenzene	SW8260B	100	170	950	ND		ug/Kg	04/07/18	4:50	NP	430824
1,2-Dibromo-3-Chloropropane	SW8260B	100	180	950	ND		ug/Kg	04/07/18	4:50	NP	430824
Hexachlorobutadiene	SW8260B	100	130	950	ND		ug/Kg	04/07/18	4:50	NP	430824
1,2,4-Trichlorobenzene	SW8260B	100	140	950	ND		ug/Kg	04/07/18	4:50	NP	430824
Naphthalene	SW8260B	100	160	950	**2710**		ug/Kg	04/07/18	4:50	NP	430824
1,2,3-Trichlorobenzene	SW8260B	100	160	950	ND		ug/Kg	04/07/18	4:50	NP	430824
2-Butanone	SW8260B	100	220	950	ND		ug/Kg	04/07/18	4:50	NP	430824
(S) Dibromofluoromethane	SW8260B		59.8 - 148		**105**		%	04/07/18	4:50	NP	430824
(S) Toluene-d8	SW8260B		55.2 - 133		**106**		%	04/07/18	4:50	NP	430824
(S) 4-Bromofluorobenzene	SW8260B		55.8 - 141		**102**		%	04/07/18	4:50	NP	430824

Prep Method:	5035GRO	**Prep Batch Date/Time:**	4/6/18	8:22:00PM
Prep Batch ID:	1104077	**Prep Analyst:**	NPAR	

Torrent LABORATORY, INC.

SAMPLE RESULTS

Report prepared for: Peter Langtry
Cornerstone Earth Group

Date/Time Received: 04/04/18, 4:15 pm
Date Reported: 04/09/18

Client Sample ID:	EB-19 (16.5-17)	**Lab Sample ID:**	1804038-019B
Project Name/Location:	1433-1493 El Camino Real	**Sample Matrix:**	Soil
Project Number:	958-1-5		
Date/Time Sampled:	04/04/18 / 12:09		
SDG:			

Prep Method:	5035GRO	**Prep Batch Date/Time:**	4/6/18	8:22:00PM
Prep Batch ID:	1104077	**Prep Analyst:**	NPAR	

Parameters:	Analysis Method	DF	MDL	PQL	Results	Q	Units	Analyzed	Time	By	Analytical Batch
TPH(Gasoline)	8260TPH	100	4100	9500	**316000**	x	ug/Kg	04/07/18	4:50	NP	430824
(S) 4-Bromofluorobenzene	8260TPH		43.9 - 127		**104**		%	04/07/18	4:50	NP	430824

NOTE: x - Although some TPH as Gasoline constituents are present, th sample pattern does not match pattern of reference Gasoline standard. Result is elevated due to contribution from heavy end hydrocarbons within C5-C12 range quantified as Gasoline.

Torrent LABORATORY, INC.

SAMPLE RESULTS

Report prepared for: Peter Langtry
Cornerstone Earth Group

Date/Time Received: 04/04/18, 4:15 pm
Date Reported: 04/09/18

Client Sample ID:	EB-19 (19.5-20)	**Lab Sample ID:**	1804038-020B
Project Name/Location:	1433-1493 El Camino Real	**Sample Matrix:**	Soil
Project Number:	958-1-5		
Date/Time Sampled:	04/04/18 / 12:12		
SDG:			

Prep Method:	5035	**Prep Batch Date/Time:**	4/12/18	4:39:00PM
Prep Batch ID:	1104235	**Prep Analyst:**	NPAR	

Parameters:	Analysis Method	DF	MDL	PQL	Results	Q	Units	Analyzed	Time	By	Analytical Batch
Dichlorodifluoromethane	SW8260B	100	160	1300	ND		ug/Kg	04/12/18	21:44	NP	430973
Chloromethane	SW8260B	100	240	1300	ND		ug/Kg	04/12/18	21:44	NP	430973
Vinyl Chloride	SW8260B	100	270	1300	ND		ug/Kg	04/12/18	21:44	NP	430973
Bromomethane	SW8260B	100	350	1300	ND		ug/Kg	04/12/18	21:44	NP	430973
Chloroethane	SW8260B	100	390	1300	ND		ug/Kg	04/12/18	21:44	NP	430973
Trichlorofluoromethane	SW8260B	100	270	1300	ND		ug/Kg	04/12/18	21:44	NP	430973
1,1-Dichloroethene	SW8260B	100	270	1300	ND		ug/Kg	04/12/18	21:44	NP	430973
Freon 113	SW8260B	100	250	1300	ND		ug/Kg	04/12/18	21:44	NP	430973
Methylene Chloride	SW8260B	100	930	1300	ND		ug/Kg	04/12/18	21:44	NP	430973
trans-1,2-Dichloroethene	SW8260B	100	270	1300	ND		ug/Kg	04/12/18	21:44	NP	430973
MTBE	SW8260B	100	310	1300	ND		ug/Kg	04/12/18	21:44	NP	430973
tert-Butanol	SW8260B	100	1500	6500	ND		ug/Kg	04/12/18	21:44	NP	430973
Diisopropyl ether (DIPE)	SW8260B	100	300	1300	ND		ug/Kg	04/12/18	21:44	NP	430973
1,1-Dichloroethane	SW8260B	100	290	1300	ND		ug/Kg	04/12/18	21:44	NP	430973
ETBE	SW8260B	100	300	1300	ND		ug/Kg	04/12/18	21:44	NP	430973
cis-1,2-Dichloroethene	SW8260B	100	290	1300	ND		ug/Kg	04/12/18	21:44	NP	430973
2,2-Dichloropropane	SW8260B	100	250	1300	ND		ug/Kg	04/12/18	21:44	NP	430973
Bromochloromethane	SW8260B	100	310	1300	ND		ug/Kg	04/12/18	21:44	NP	430973
Chloroform	SW8260B	100	310	1300	ND		ug/Kg	04/12/18	21:44	NP	430973
Carbon Tetrachloride	SW8260B	100	270	1300	ND		ug/Kg	04/12/18	21:44	NP	430973
1,1,1-Trichloroethane	SW8260B	100	270	1300	ND		ug/Kg	04/12/18	21:44	NP	430973
1,1-Dichloropropene	SW8260B	100	260	1300	ND		ug/Kg	04/12/18	21:44	NP	430973
Benzene	SW8260B	100	290	1300	ND		ug/Kg	04/12/18	21:44	NP	430973
TAME	SW8260B	100	300	1300	ND		ug/Kg	04/12/18	21:44	NP	430973
1,2-Dichloroethane	SW8260B	100	300	1300	ND		ug/Kg	04/12/18	21:44	NP	430973
Trichloroethylene	SW8260B	100	240	1300	ND		ug/Kg	04/12/18	21:44	NP	430973
Dibromomethane	SW8260B	100	240	1300	ND		ug/Kg	04/12/18	21:44	NP	430973
1,2-Dichloropropane	SW8260B	100	240	1300	ND		ug/Kg	04/12/18	21:44	NP	430973
Bromodichloromethane	SW8260B	100	260	1300	ND		ug/Kg	04/12/18	21:44	NP	430973
cis-1,3-Dichloropropene	SW8260B	100	210	1300	ND		ug/Kg	04/12/18	21:44	NP	430973
Toluene	SW8260B	100	240	1300	ND		ug/Kg	04/12/18	21:44	NP	430973
Tetrachloroethylene	SW8260B	100	220	1300	ND		ug/Kg	04/12/18	21:44	NP	430973
trans-1,3-Dichloropropene	SW8260B	100	220	1300	ND		ug/Kg	04/12/18	21:44	NP	430973
1,1,2-Trichloroethane	SW8260B	100	240	1300	ND		ug/Kg	04/12/18	21:44	NP	430973
Dibromochloromethane	SW8260B	100	250	1300	ND		ug/Kg	04/12/18	21:44	NP	430973
1,3-Dichloropropane	SW8260B	100	240	1300	ND		ug/Kg	04/12/18	21:44	NP	430973

Torrent LABORATORY, INC.

SAMPLE RESULTS

Report prepared for: Peter Langtry
Cornerstone Earth Group

Date/Time Received: 04/04/18, 4:15 pm
Date Reported: 04/09/18

Client Sample ID:	EB-19 (19.5-20)	**Lab Sample ID:**	1804038-020B
Project Name/Location:	1433-1493 El Camino Real	**Sample Matrix:**	Soil
Project Number:	958-1-5		
Date/Time Sampled:	04/04/18 / 12:12		
SDG:			

Prep Method:	5035	**Prep Batch Date/Time:**	4/12/18	4:39:00PM
Prep Batch ID:	1104235	**Prep Analyst:**	NPAR	

Parameters:	Analysis Method	DF	MDL	PQL	Results	Q	Units	Analyzed	Time	By	Analytical Batch
1,2-Dibromoethane	SW8260B	100	240	1300	ND		ug/Kg	04/12/18	21:44	NP	430973
Chlorobenzene	SW8260B	100	240	1300	ND		ug/Kg	04/12/18	21:44	NP	430973
Ethyl Benzene	SW8260B	100	220	1300	**2250**		ug/Kg	04/12/18	21:44	NP	430973
1,1,1,2-Tetrachloroethane	SW8260B	100	250	1300	ND		ug/Kg	04/12/18	21:44	NP	430973
m,p-Xylene	SW8260B	100	410	1300	**8670**		ug/Kg	04/12/18	21:44	NP	430973
o-Xylene	SW8260B	100	230	1300	**3790**		ug/Kg	04/12/18	21:44	NP	430973
Styrene	SW8260B	100	210	1300	ND		ug/Kg	04/12/18	21:44	NP	430973
Bromoform	SW8260B	100	220	1300	ND		ug/Kg	04/12/18	21:44	NP	430973
Isopropyl Benzene	SW8260B	100	210	1300	ND		ug/Kg	04/12/18	21:44	NP	430973
n-Propylbenzene	SW8260B	100	200	1300	ND		ug/Kg	04/12/18	21:44	NP	430973
Bromobenzene	SW8260B	100	230	1300	ND		ug/Kg	04/12/18	21:44	NP	430973
1,1,2,2-Tetrachloroethane	SW8260B	100	250	1300	ND		ug/Kg	04/12/18	21:44	NP	430973
2-Chlorotoluene	SW8260B	100	230	1300	ND		ug/Kg	04/12/18	21:44	NP	430973
1,3,5-Trimethylbenzene	SW8260B	100	210	1300	**1820**		ug/Kg	04/12/18	21:44	NP	430973
1,2,3-Trichloropropane	SW8260B	100	250	1300	ND		ug/Kg	04/12/18	21:44	NP	430973
4-Chlorotoluene	SW8260B	100	220	1300	ND		ug/Kg	04/12/18	21:44	NP	430973
tert-Butylbenzene	SW8260B	100	210	1300	ND		ug/Kg	04/12/18	21:44	NP	430973
1,2,4-Trimethylbenzene	SW8260B	100	180	1300	**1910**		ug/Kg	04/12/18	21:44	NP	430973
sec-Butyl Benzene	SW8260B	100	200	1300	ND		ug/Kg	04/12/18	21:44	NP	430973
p-Isopropyltoluene	SW8260B	100	190	1300	ND		ug/Kg	04/12/18	21:44	NP	430973
1,3-Dichlorobenzene	SW8260B	100	220	1300	ND		ug/Kg	04/12/18	21:44	NP	430973
1,4-Dichlorobenzene	SW8260B	100	220	1300	ND		ug/Kg	04/12/18	21:44	NP	430973
n-Butylbenzene	SW8260B	100	190	1300	ND		ug/Kg	04/12/18	21:44	NP	430973
1,2-Dichlorobenzene	SW8260B	100	230	1300	ND		ug/Kg	04/12/18	21:44	NP	430973
1,2-Dibromo-3-Chloropropane	SW8260B	100	240	1300	ND		ug/Kg	04/12/18	21:44	NP	430973
Hexachlorobutadiene	SW8260B	100	180	1300	ND		ug/Kg	04/12/18	21:44	NP	430973
1,2,4-Trichlorobenzene	SW8260B	100	190	1300	ND		ug/Kg	04/12/18	21:44	NP	430973
Naphthalene	SW8260B	100	220	1300	ND		ug/Kg	04/12/18	21:44	NP	430973
1,2,3-Trichlorobenzene	SW8260B	100	220	1300	ND		ug/Kg	04/12/18	21:44	NP	430973
2-Butanone	SW8260B	100	300	1300	ND		ug/Kg	04/12/18	21:44	NP	430973
(S) Dibromofluoromethane	SW8260B		59.8 - 148		**108**		%	04/12/18	21:44	NP	430973
(S) Toluene-d8	SW8260B		55.2 - 133		**101**		%	04/12/18	21:44	NP	430973
(S) 4-Bromofluorobenzene	SW8260B		55.8 - 141		**107**		%	04/12/18	21:44	NP	430973

Prep Method:	5035GRO	**Prep Batch Date/Time:**	4/12/18	4:39:00PM
Prep Batch ID:	1104236	**Prep Analyst:**	NPAR	

Torrent LABORATORY, INC.

SAMPLE RESULTS

Report prepared for: Peter Langtry
Cornerstone Earth Group

Date/Time Received: 04/04/18, 4:15 pm
Date Reported: 04/09/18

Client Sample ID:	EB-19 (19.5-20)	**Lab Sample ID:**	1804038-020B
Project Name/Location:	1433-1493 El Camino Real	**Sample Matrix:**	Soil
Project Number:	958-1-5		
Date/Time Sampled:	04/04/18 / 12:12		
SDG:			

Prep Method:	5035GRO	**Prep Batch Date/Time:**	4/12/18	4:39:00PM
Prep Batch ID:	1104236	**Prep Analyst:**	NPAR	

Parameters:	Analysis Method	DF	MDL	PQL	Results	Q	Units	Analyzed	Time	By	Analytical Batch
TPH(Gasoline)	8260TPH	100	5700	13000	**20200**	x	ug/Kg	04/12/18	21:44	NP	430973
(S) 4-Bromofluorobenzene	8260TPH		43.9 - 127		**78.0**		%	04/12/18	21:44	NP	430973

NOTE: x - Although some TPH as Gasoline constituents are present, th sample pattern does not match pattern of reference Gasoline standard. Result is elevated due to contribution from heavy end hydrocarbons within C5-C12 range quantified as Gasoline.

MB Summary Report

Work Order:	1804038	**Prep Method:**	3546_TPH	**Prep Date:**	04/04/18	**Prep Batch:**	1103958
Matrix:	Soil	**Analytical Method:**	SW8015B	**Analyzed Date:**	4/4/2018	**Analytical Batch:**	430738
Units:	mg/Kg						

Parameters	MDL	PQL	Method Blank Conc.	Lab Qualifier
TPH as Diesel	0.85	2.0	0.864	
TPH as Motor Oil	3.2	10	ND	
Pentacosane (S)			103	

Work Order:	1804038	**Prep Method:**	5035	**Prep Date:**	04/05/18	**Prep Batch:**	1104009
Matrix:	Soil	**Analytical Method:**	SW8260B	**Analyzed Date:**	4/5/2018	**Analytical Batch:**	430772
Units:	ug/Kg						

Parameters	MDL	PQL	Method Blank Conc.	Lab Qualifier
Dichlorodifluoromethane	1.2	10	ND	
Chloromethane	1.8	10	ND	
Vinyl Chloride	2.0	10	ND	
Bromomethane	2.7	10	ND	
Chloroethane	3.0	10	ND	
Trichlorofluoromethane	2.1	10	ND	
1,1-Dichloroethene	2.0	10	ND	
Freon 113	1.9	10	ND	
Methylene Chloride	7.1	10	ND	
trans-1,2-Dichloroethene	2.1	10	ND	
MTBE	2.3	10	ND	
tert-Butanol	12	50	ND	
Diisopropyl ether (DIPE)	2.3	10	ND	
1,1-Dichloroethane	2.2	10	ND	
ETBE	2.3	10	ND	
cis-1,2-Dichloroethene	2.2	10	ND	
2,2-Dichloropropane	1.9	10	ND	
Bromochloromethane	2.3	10	ND	
Chloroform	2.4	10	ND	
Carbon Tetrachloride	2.1	10	ND	
1,1,1-Trichloroethane	2.1	10	ND	
1,1-Dichloropropene	2.0	10	ND	
Benzene	2.2	10	ND	
TAME	2.3	10	ND	
1,2-Dichloroethane	2.3	10	ND	
Trichloroethylene	1.8	10	ND	
Dibromomethane	1.8	10	ND	
1,2-Dichloropropane	1.9	10	ND	
Bromodichloromethane	2.0	10	ND	
cis-1,3-Dichloropropene	1.6	10	ND	

MB Summary Report

Work Order:	1804038	**Prep Method:**	5035	**Prep Date:**	04/05/18	**Prep Batch:**	1104009
Matrix:	Soil	**Analytical Method:**	SW8260B	**Analyzed Date:**	4/5/2018	**Analytical Batch:**	430772
Units:	ug/Kg						

Parameters	MDL	PQL	Method Blank Conc.	Lab Qualifier
Toluene	1.8	10	ND	
Tetrachloroethylene	1.7	10	ND	
trans-1,3-Dichloropropene	1.6	10	ND	
1,1,2-Trichloroethane	1.8	10	ND	
Dibromochloromethane	1.9	10	ND	
1,3-Dichloropropane	1.8	10	ND	
1,2-Dibromoethane	1.8	10	ND	
Chlorobenzene	1.8	10	ND	
Ethyl Benzene	1.7	10	ND	
1,1,1,2-Tetrachloroethane	1.9	10	ND	
m,p-Xylene	3.2	10	ND	
o-Xylene	1.7	10	ND	
Styrene	1.6	10	ND	
Bromoform	1.7	10	ND	
Isopropyl Benzene	1.6	10	ND	
n-Propylbenzene	1.6	10	ND	
Bromobenzene	1.8	10	ND	
1,1,2,2-Tetrachloroethane	1.9	10	ND	
2-Chlorotoluene	1.8	10	ND	
1,3,5-Trimethylbenzene	1.6	10	ND	
1,2,3-Trichloropropane	1.9	10	ND	
4-Chlorotoluene	1.6	10	ND	
tert-Butylbenzene	1.6	10	ND	
1,2,4-Trimethylbenzene	1.4	10	ND	
sec-Butyl Benzene	1.6	10	ND	
p-Isopropyltoluene	1.5	10	ND	
1,3-Dichlorobenzene	1.7	10	ND	
1,4-Dichlorobenzene	1.7	10	ND	
n-Butylbenzene	1.5	10	ND	
1,2-Dichlorobenzene	1.8	10	ND	
1,2-Dibromo-3-Chloropropane	1.8	10	ND	
Hexachlorobutadiene	1.4	10	ND	
1,2,4-Trichlorobenzene	1.5	10	ND	
Naphthalene	1.7	10	1.7	
1,2,3-Trichlorobenzene	1.7	10	ND	
2-Butanone	1.7	10	ND	
(S) Dibromofluoromethane			87.6	
(S) Toluene-d8			91.2	
(S) 4-Bromofluorobenzene			113	

MB Summary Report

Work Order:	1804038	**Prep Method:**	5035GRO	**Prep Date:**	04/05/18	**Prep Batch:**	1104010
Matrix:	Soil	**Analytical Method:**	SW8260B	**Analyzed Date:**	4/5/2018	**Analytical Batch:**	430772
Units:	ug/Kg						

Parameters	**MDL**	**PQL**	**Method Blank Conc.**	**Lab Qualifier**
TPH(Gasoline)	43	100	ND	
(S) 4-Bromofluorobenzene			113	

MB Summary Report

Work Order:	1804038	**Prep Method:**	5035	**Prep Date:**	04/06/18	**Prep Batch:**	1104076
Matrix:	Soil	**Analytical Method:**	SW8260B	**Analyzed Date:**	4/6/2018	**Analytical Batch:**	430824
Units:	ug/Kg						

Parameters	MDL	PQL	Method Blank Conc.	Lab Qualifier
Dichlorodifluoromethane	1.2	10	ND	
Chloromethane	1.8	10	ND	
Vinyl Chloride	2.0	10	ND	
Bromomethane	2.7	10	ND	
Chloroethane	3.0	10	ND	
Trichlorofluoromethane	2.1	10	ND	
1,1-Dichloroethene	2.0	10	ND	
Freon 113	1.9	10	ND	
Methylene Chloride	7.1	10	ND	
trans-1,2-Dichloroethene	2.1	10	ND	
MTBE	2.3	10	ND	
tert-Butanol	12	50	ND	
Diisopropyl ether (DIPE)	2.3	10	ND	
1,1-Dichloroethane	2.2	10	ND	
ETBE	2.3	10	ND	
cis-1,2-Dichloroethene	2.2	10	ND	
2,2-Dichloropropane	1.9	10	ND	
Bromochloromethane	2.3	10	ND	
Chloroform	2.4	10	ND	
Carbon Tetrachloride	2.1	10	ND	
1,1,1-Trichloroethane	2.1	10	ND	
1,1-Dichloropropene	2.0	10	ND	
Benzene	2.2	10	ND	
TAME	2.3	10	ND	
1,2-Dichloroethane	2.3	10	ND	
Trichloroethylene	1.8	10	ND	
Dibromomethane	1.8	10	ND	
1,2-Dichloropropane	1.9	10	ND	
Bromodichloromethane	2.0	10	ND	
cis-1,3-Dichloropropene	1.6	10	ND	
Toluene	1.8	10	ND	
Tetrachloroethylene	1.7	10	ND	
trans-1,3-Dichloropropene	1.6	10	ND	
1,1,2-Trichloroethane	1.8	10	ND	
Dibromochloromethane	1.9	10	ND	
1,3-Dichloropropane	1.8	10	ND	
1,2-Dibromoethane	1.8	10	ND	
Chlorobenzene	1.8	10	ND	
Ethyl Benzene	1.7	10	ND	
1,1,1,2-Tetrachloroethane	1.9	10	ND	
m,p-Xylene	3.2	10	ND	
o-Xylene	1.7	10	ND	

MB Summary Report

Work Order:	1804038	**Prep Method:**	5035	**Prep Date:**	04/06/18	**Prep Batch:**	1104076
Matrix:	Soil	**Analytical Method:**	SW8260B	**Analyzed Date:**	4/6/2018	**Analytical Batch:**	430824
Units:	ug/Kg						

Parameters	MDL	PQL	Method Blank Conc.	Lab Qualifier
Styrene	1.6	10	2.8	
Bromoform	1.7	10	ND	
Isopropyl Benzene	1.6	10	1.8	
n-Propylbenzene	1.6	10	ND	
Bromobenzene	1.8	10	ND	
1,1,2,2-Tetrachloroethane	1.9	10	ND	
2-Chlorotoluene	1.8	10	ND	
1,3,5-Trimethylbenzene	1.6	10	1.8	
1,2,3-Trichloropropane	1.9	10	ND	
4-Chlorotoluene	1.6	10	ND	
tert-Butylbenzene	1.6	10	1.8	
1,2,4-Trimethylbenzene	1.4	10	2.2	
sec-Butyl Benzene	1.6	10	2.0	
p-Isopropyltoluene	1.5	10	2.8	
1,3-Dichlorobenzene	1.7	10	ND	
1,4-Dichlorobenzene	1.7	10	ND	
n-Butylbenzene	1.5	10	3.6	
1,2-Dichlorobenzene	1.8	10	ND	
1,2-Dibromo-3-Chloropropane	1.8	10	ND	
Hexachlorobutadiene	1.4	10	1.8	
1,2,4-Trichlorobenzene	1.5	10	3.2	
Naphthalene	1.7	10	4.3	
1,2,3-Trichlorobenzene	1.7	10	3.9	
2-Butanone	1.7	10	ND	
(S) Dibromofluoromethane			111	
(S) Toluene-d8			103	
(S) 4-Bromofluorobenzene			110	

MB Summary Report

Work Order:	1804038	**Prep Method:**	5035	**Prep Date:**	04/06/18	**Prep Batch:**	1104076
Matrix:	Soil	**Analytical Method:**	SW8260B	**Analyzed Date:**	4/6/2018	**Analytical Batch:**	430824
Units:	ug/Kg						

Parameters	MDL	PQL	Method Blank Conc.	Lab Qualifier
Dichlorodifluoromethane	120	1000	ND	
Chloromethane	180	1000	ND	
Vinyl Chloride	200	1000	ND	
Bromomethane	270	1000	ND	
Chloroethane	300	1000	ND	
Trichlorofluoromethane	210	1000	ND	
1,1-Dichloroethene	200	1000	ND	
Freon 113	190	1000	ND	
Methylene Chloride	710	1000	ND	
trans-1,2-Dichloroethene	210	1000	ND	
MTBE	230	1000	ND	
tert-Butanol	1200	5000	ND	
Diisopropyl ether (DIPE)	230	1000	ND	
1,1-Dichloroethane	220	1000	ND	
ETBE	230	1000	ND	
cis-1,2-Dichloroethene	220	1000	ND	
2,2-Dichloropropane	190	1000	ND	
Bromochloromethane	230	1000	ND	
Chloroform	240	1000	ND	
Carbon Tetrachloride	210	1000	ND	
1,1,1-Trichloroethane	210	1000	ND	
1,1-Dichloropropene	200	1000	ND	
Benzene	220	1000	ND	
TAME	230	1000	ND	
1,2-Dichloroethane	230	1000	ND	
Trichloroethylene	180	1000	ND	
Dibromomethane	180	1000	ND	
1,2-Dichloropropane	190	1000	ND	
Bromodichloromethane	200	1000	ND	
cis-1,3-Dichloropropene	160	1000	ND	
Toluene	180	1000	ND	
Tetrachloroethylene	170	1000	ND	
trans-1,3-Dichloropropene	160	1000	ND	
1,1,2-Trichloroethane	180	1000	ND	
Dibromochloromethane	190	1000	ND	
1,3-Dichloropropane	180	1000	ND	
1,2-Dibromoethane	180	1000	ND	
Chlorobenzene	180	1000	ND	
Ethyl Benzene	170	1000	ND	
1,1,1,2-Tetrachloroethane	190	1000	ND	
m,p-Xylene	320	1000	ND	
o-Xylene	170	1000	ND	

MB Summary Report

Work Order:	1804038	**Prep Method:**	5035	**Prep Date:**	04/06/18	**Prep Batch:**	1104076
Matrix:	Soil	**Analytical Method:**	SW8260B	**Analyzed Date:**	4/6/2018	**Analytical Batch:**	430824
Units:	ug/Kg						

Parameters	MDL	PQL	Method Blank Conc.	Lab Qualifier
Styrene	160	1000	ND	
Bromoform	170	1000	ND	
Isopropyl Benzene	160	1000	ND	
n-Propylbenzene	160	1000	ND	
Bromobenzene	180	1000	ND	
1,1,2,2-Tetrachloroethane	190	1000	ND	
2-Chlorotoluene	180	1000	ND	
1,3,5-Trimethylbenzene	160	1000	ND	
1,2,3-Trichloropropane	190	1000	ND	
4-Chlorotoluene	160	1000	ND	
tert-Butylbenzene	160	1000	ND	
1,2,4-Trimethylbenzene	140	1000	ND	
sec-Butyl Benzene	160	1000	ND	
p-Isopropyltoluene	150	1000	180	
1,3-Dichlorobenzene	170	1000	ND	
1,4-Dichlorobenzene	170	1000	ND	
n-Butylbenzene	150	1000	220	
1,2-Dichlorobenzene	180	1000	ND	
1,2-Dibromo-3-Chloropropane	180	1000	ND	
Hexachlorobutadiene	140	1000	ND	
1,2,4-Trichlorobenzene	150	1000	ND	
Naphthalene	170	1000	170	
1,2,3-Trichlorobenzene	170	1000	ND	
2-Butanone	170	1000	ND	
(S) Dibromofluoromethane			107	
(S) Toluene-d8			106	
(S) 4-Bromofluorobenzene			107	

Work Order:	1804038	**Prep Method:**	5035GRO	**Prep Date:**	04/06/18	**Prep Batch:**	1104077
Matrix:	Soil	**Analytical Method:**	SW8260B	**Analyzed Date:**	4/6/2018	**Analytical Batch:**	430824
Units:	ug/Kg						

Parameters	MDL	PQL	Method Blank Conc.	Lab Qualifier
TPH(Gasoline)	43	100	83	
(S) 4-Bromofluorobenzene			124	

MB Summary Report

Work Order:	1804038	**Prep Method:**	5035GRO	**Prep Date:**	04/06/18	**Prep Batch:**	1104077
Matrix:	Soil	**Analytical Method:**	SW8260B	**Analyzed Date:**	4/6/2018	**Analytical Batch:**	430824
Units:	ug/Kg						

Parameters	**MDL**	**PQL**	**Method Blank Conc.**	**Lab Qualifier**
TPH(Gasoline)	4300	10000	5200	
(S) 4-Bromofluorobenzene			114	

MB Summary Report

Work Order:	1804038	**Prep Method:**	5035	**Prep Date:**	04/08/18	**Prep Batch:**	1104088
Matrix:	Soil	**Analytical Method:**	SW8260B	**Analyzed Date:**	4/8/2018	**Analytical Batch:**	430841
Units:	ug/Kg						

Parameters	MDL	PQL	Method Blank Conc.	Lab Qualifier
Dichlorodifluoromethane	1.2	10	ND	
Chloromethane	1.8	10	ND	
Vinyl Chloride	2.0	10	ND	
Bromomethane	2.7	10	ND	
Chloroethane	3.0	10	ND	
Trichlorofluoromethane	2.1	10	ND	
1,1-Dichloroethene	2.0	10	ND	
Freon 113	1.9	10	ND	
Methylene Chloride	7.1	10	ND	
trans-1,2-Dichloroethene	2.1	10	ND	
MTBE	2.3	10	ND	
tert-Butanol	12	50	ND	
Diisopropyl ether (DIPE)	2.3	10	ND	
1,1-Dichloroethane	2.2	10	ND	
ETBE	2.3	10	ND	
cis-1,2-Dichloroethene	2.2	10	ND	
2,2-Dichloropropane	1.9	10	ND	
Bromochloromethane	2.3	10	ND	
Chloroform	2.4	10	ND	
Carbon Tetrachloride	2.1	10	ND	
1,1,1-Trichloroethane	2.1	10	ND	
1,1-Dichloropropene	2.0	10	ND	
Benzene	2.2	10	ND	
TAME	2.3	10	ND	
1,2-Dichloroethane	2.3	10	ND	
Trichloroethylene	1.8	10	ND	
Dibromomethane	1.8	10	ND	
1,2-Dichloropropane	1.9	10	ND	
Bromodichloromethane	2.0	10	ND	
cis-1,3-Dichloropropene	1.6	10	ND	
Toluene	1.8	10	ND	
Tetrachloroethylene	1.7	10	ND	
trans-1,3-Dichloropropene	1.6	10	ND	
1,1,2-Trichloroethane	1.8	10	ND	
Dibromochloromethane	1.9	10	ND	
1,3-Dichloropropane	1.8	10	ND	
1,2-Dibromoethane	1.8	10	ND	
Chlorobenzene	1.8	10	ND	
Ethyl Benzene	1.7	10	ND	
1,1,1,2-Tetrachloroethane	1.9	10	ND	
m,p-Xylene	3.2	10	ND	
o-Xylene	1.7	10	ND	

MB Summary Report

Work Order:	1804038	**Prep Method:**	5035	**Prep Date:**	04/08/18	**Prep Batch:**	1104088
Matrix:	Soil	**Analytical Method:**	SW8260B	**Analyzed Date:**	4/8/2018	**Analytical Batch:**	430841
Units:	ug/Kg						

Parameters	MDL	PQL	Method Blank Conc.	Lab Qualifier
Styrene	1.6	10	ND	
Bromoform	1.7	10	ND	
Isopropyl Benzene	1.6	10	ND	
n-Propylbenzene	1.6	10	ND	
Bromobenzene	1.8	10	ND	
1,1,2,2-Tetrachloroethane	1.9	10	ND	
2-Chlorotoluene	1.8	10	ND	
1,3,5-Trimethylbenzene	1.6	10	ND	
1,2,3-Trichloropropane	1.9	10	ND	
4-Chlorotoluene	1.6	10	ND	
tert-Butylbenzene	1.6	10	ND	
1,2,4-Trimethylbenzene	1.4	10	ND	
sec-Butyl Benzene	1.6	10	ND	
p-Isopropyltoluene	1.5	10	1.5	
1,3-Dichlorobenzene	1.7	10	ND	
1,4-Dichlorobenzene	1.7	10	ND	
n-Butylbenzene	1.5	10	1.7	
1,2-Dichlorobenzene	1.8	10	ND	
1,2-Dibromo-3-Chloropropane	1.8	10	ND	
Hexachlorobutadiene	1.4	10	ND	
1,2,4-Trichlorobenzene	1.5	10	ND	
Naphthalene	1.7	10	ND	
1,2,3-Trichlorobenzene	1.7	10	ND	
2-Butanone	1.7	10	ND	
(S) Dibromofluoromethane			107	
(S) Toluene-d8			101	
(S) 4-Bromofluorobenzene			103	

MB Summary Report

Work Order:	1804038	**Prep Method:**	5035	**Prep Date:**	04/09/18	**Prep Batch:**	1104109
Matrix:	Soil	**Analytical Method:**	SW8260B	**Analyzed Date:**	4/9/2018	**Analytical Batch:**	430855
Units:	ug/Kg						

Parameters	MDL	PQL	Method Blank Conc.	Lab Qualifier
Dichlorodifluoromethane	1.2	10	ND	
Chloromethane	1.8	10	ND	
Vinyl Chloride	2.0	10	ND	
Bromomethane	2.7	10	ND	
Chloroethane	3.0	10	ND	
Trichlorofluoromethane	2.1	10	ND	
1,1-Dichloroethene	2.0	10	ND	
Freon 113	1.9	10	ND	
Methylene Chloride	7.1	10	ND	
trans-1,2-Dichloroethene	2.1	10	ND	
MTBE	2.3	10	ND	
tert-Butanol	12	50	ND	
Diisopropyl ether (DIPE)	2.3	10	ND	
1,1-Dichloroethane	2.2	10	ND	
ETBE	2.3	10	ND	
cis-1,2-Dichloroethene	2.2	10	ND	
2,2-Dichloropropane	1.9	10	ND	
Bromochloromethane	2.3	10	ND	
Chloroform	2.4	10	ND	
Carbon Tetrachloride	2.1	10	ND	
1,1,1-Trichloroethane	2.1	10	ND	
1,1-Dichloropropene	2.0	10	ND	
Benzene	2.2	10	ND	
TAME	2.3	10	ND	
1,2-Dichloroethane	2.3	10	ND	
Trichloroethylene	1.8	10	ND	
Dibromomethane	1.8	10	ND	
1,2-Dichloropropane	1.9	10	ND	
Bromodichloromethane	2.0	10	ND	
cis-1,3-Dichloropropene	1.6	10	ND	
Toluene	1.8	10	ND	
Tetrachloroethylene	1.7	10	ND	
trans-1,3-Dichloropropene	1.6	10	ND	
1,1,2-Trichloroethane	1.8	10	ND	
Dibromochloromethane	1.9	10	ND	
1,3-Dichloropropane	1.8	10	ND	
1,2-Dibromoethane	1.8	10	ND	
Chlorobenzene	1.8	10	ND	
Ethyl Benzene	1.7	10	ND	
1,1,1,2-Tetrachloroethane	1.9	10	ND	
m,p-Xylene	3.2	10	ND	
o-Xylene	1.7	10	ND	

MB Summary Report

Work Order:	1804038	**Prep Method:**	5035	**Prep Date:**	04/09/18	**Prep Batch:**	1104109
Matrix:	Soil	**Analytical Method:**	SW8260B	**Analyzed Date:**	4/9/2018	**Analytical Batch:**	430855
Units:	ug/Kg						

Parameters	MDL	PQL	Method Blank Conc.	Lab Qualifier
Styrene	1.6	10	ND	
Bromoform	1.7	10	ND	
Isopropyl Benzene	1.6	10	ND	
n-Propylbenzene	1.6	10	ND	
Bromobenzene	1.8	10	ND	
1,1,2,2-Tetrachloroethane	1.9	10	ND	
2-Chlorotoluene	1.8	10	ND	
1,3,5-Trimethylbenzene	1.6	10	ND	
1,2,3-Trichloropropane	1.9	10	ND	
4-Chlorotoluene	1.6	10	ND	
tert-Butylbenzene	1.6	10	ND	
1,2,4-Trimethylbenzene	1.4	10	ND	
sec-Butyl Benzene	1.6	10	ND	
p-Isopropyltoluene	1.5	10	ND	
1,3-Dichlorobenzene	1.7	10	ND	
1,4-Dichlorobenzene	1.7	10	ND	
n-Butylbenzene	1.5	10	ND	
1,2-Dichlorobenzene	1.8	10	ND	
1,2-Dibromo-3-Chloropropane	1.8	10	ND	
Hexachlorobutadiene	1.4	10	ND	
1,2,4-Trichlorobenzene	1.5	10	ND	
Naphthalene	1.7	10	ND	
1,2,3-Trichlorobenzene	1.7	10	ND	
2-Butanone	1.7	10	ND	
(S) Dibromofluoromethane			107	
(S) Toluene-d8			106	
(S) 4-Bromofluorobenzene			110	

MB Summary Report

Work Order:	1804038	**Prep Method:**	5035	**Prep Date:**	04/09/18	**Prep Batch:**	1104109
Matrix:	Soil	**Analytical Method:**	SW8260B	**Analyzed Date:**	4/9/2018	**Analytical Batch:**	430855
Units:	ug/Kg						

Parameters	MDL	PQL	Method Blank Conc.	Lab Qualifier
Dichlorodifluoromethane	120	1000	ND	
Chloromethane	180	1000	ND	
Vinyl Chloride	200	1000	ND	
Bromomethane	270	1000	ND	
Chloroethane	300	1000	ND	
Trichlorofluoromethane	210	1000	ND	
1,1-Dichloroethene	200	1000	ND	
Freon 113	190	1000	ND	
Methylene Chloride	710	1000	ND	
trans-1,2-Dichloroethene	210	1000	ND	
MTBE	230	1000	ND	
tert-Butanol	1200	5000	ND	
Diisopropyl ether (DIPE)	230	1000	ND	
1,1-Dichloroethane	220	1000	ND	
ETBE	230	1000	ND	
cis-1,2-Dichloroethene	220	1000	ND	
2,2-Dichloropropane	190	1000	ND	
Bromochloromethane	230	1000	ND	
Chloroform	240	1000	ND	
Carbon Tetrachloride	210	1000	ND	
1,1,1-Trichloroethane	210	1000	ND	
1,1-Dichloropropene	200	1000	ND	
Benzene	220	1000	ND	
TAME	230	1000	ND	
1,2-Dichloroethane	230	1000	ND	
Trichloroethylene	180	1000	ND	
Dibromomethane	180	1000	ND	
1,2-Dichloropropane	190	1000	ND	
Bromodichloromethane	200	1000	ND	
cis-1,3-Dichloropropene	160	1000	ND	
Toluene	180	1000	ND	
Tetrachloroethylene	170	1000	ND	
trans-1,3-Dichloropropene	160	1000	ND	
1,1,2-Trichloroethane	180	1000	ND	
Dibromochloromethane	190	1000	ND	
1,3-Dichloropropane	180	1000	ND	
1,2-Dibromoethane	180	1000	ND	
Chlorobenzene	180	1000	ND	
Ethyl Benzene	170	1000	ND	
1,1,1,2-Tetrachloroethane	190	1000	ND	
m,p-Xylene	320	1000	ND	
o-Xylene	170	1000	ND	

MB Summary Report

Work Order:	1804038	**Prep Method:**	5035	**Prep Date:**	04/09/18	**Prep Batch:**	1104109
Matrix:	Soil	**Analytical Method:**	SW8260B	**Analyzed Date:**	4/9/2018	**Analytical Batch:**	430855
Units:	ug/Kg						

Parameters	MDL	PQL	Method Blank Conc.	Lab Qualifier
Styrene	160	1000	ND	
Bromoform	170	1000	ND	
Isopropyl Benzene	160	1000	ND	
n-Propylbenzene	160	1000	ND	
Bromobenzene	180	1000	ND	
1,1,2,2-Tetrachloroethane	190	1000	ND	
2-Chlorotoluene	180	1000	ND	
1,3,5-Trimethylbenzene	160	1000	ND	
1,2,3-Trichloropropane	190	1000	ND	
4-Chlorotoluene	160	1000	ND	
tert-Butylbenzene	160	1000	ND	
1,2,4-Trimethylbenzene	140	1000	210	
sec-Butyl Benzene	160	1000	ND	
p-Isopropyltoluene	150	1000	ND	
1,3-Dichlorobenzene	170	1000	ND	
1,4-Dichlorobenzene	170	1000	ND	
n-Butylbenzene	150	1000	150	
1,2-Dichlorobenzene	180	1000	ND	
1,2-Dibromo-3-Chloropropane	180	1000	ND	
Hexachlorobutadiene	140	1000	ND	
1,2,4-Trichlorobenzene	150	1000	ND	
Naphthalene	170	1000	ND	
1,2,3-Trichlorobenzene	170	1000	ND	
2-Butanone	170	1000	ND	
(S) Dibromofluoromethane			100	
(S) Toluene-d8			105	
(S) 4-Bromofluorobenzene			106	

Work Order:	1804038	**Prep Method:**	5035GRO	**Prep Date:**	04/09/18	**Prep Batch:**	1104111
Matrix:	Soil	**Analytical Method:**	SW8260B	**Analyzed Date:**	4/9/2018	**Analytical Batch:**	430855
Units:	ug/Kg						

Parameters	MDL	PQL	Method Blank Conc.	Lab Qualifier
TPH(Gasoline)	43	100	ND	
(S) 4-Bromofluorobenzene			117	

MB Summary Report

Work Order:	1804038	**Prep Method:**	5035GRO	**Prep Date:**	04/09/18	**Prep Batch:**	1104111
Matrix:	Soil	**Analytical Method:**	SW8260B	**Analyzed Date:**	4/9/2018	**Analytical Batch:**	430855
Units:	ug/Kg						

Parameters	**MDL**	**PQL**	**Method Blank Conc.**	**Lab Qualifier**
TPH(Gasoline)	4300	10000	ND	
(S) 4-Bromofluorobenzene			111	

MB Summary Report

Work Order:	1804038	**Prep Method:**	5035	**Prep Date:**	04/12/18	**Prep Batch:**	1104235
Matrix:	Soil	**Analytical Method:**	SW8260B	**Analyzed Date:**	4/12/2018	**Analytical Batch:**	430973
Units:	ug/Kg						

Parameters	MDL	PQL	Method Blank Conc.	Lab Qualifier
Dichlorodifluoromethane	1.2	10	ND	
Chloromethane	1.8	10	ND	
Vinyl Chloride	2.0	10	ND	
Bromomethane	2.7	10	ND	
Chloroethane	3.0	10	ND	
Trichlorofluoromethane	2.1	10	ND	
1,1-Dichloroethene	2.0	10	ND	
Freon 113	1.9	10	ND	
Methylene Chloride	7.1	10	ND	
trans-1,2-Dichloroethene	2.1	10	ND	
MTBE	2.3	10	ND	
tert-Butanol	12	50	ND	
Diisopropyl ether (DIPE)	2.3	10	ND	
1,1-Dichloroethane	2.2	10	ND	
ETBE	2.3	10	5.5	
cis-1,2-Dichloroethene	2.2	10	ND	
2,2-Dichloropropane	1.9	10	ND	
Bromochloromethane	2.3	10	ND	
Chloroform	2.4	10	ND	
Carbon Tetrachloride	2.1	10	ND	
1,1,1-Trichloroethane	2.1	10	ND	
1,1-Dichloropropene	2.0	10	ND	
Benzene	2.2	10	ND	
TAME	2.3	10	5.7	
1,2-Dichloroethane	2.3	10	ND	
Trichloroethylene	1.8	10	ND	
Dibromomethane	1.8	10	ND	
1,2-Dichloropropane	1.9	10	ND	
Bromodichloromethane	2.0	10	ND	
cis-1,3-Dichloropropene	1.6	10	ND	
Toluene	1.8	10	ND	
Tetrachloroethylene	1.7	10	ND	
trans-1,3-Dichloropropene	1.6	10	ND	
1,1,2-Trichloroethane	1.8	10	ND	
Dibromochloromethane	1.9	10	ND	
1,3-Dichloropropane	1.8	10	ND	
1,2-Dibromoethane	1.8	10	ND	
Chlorobenzene	1.8	10	ND	
Ethyl Benzene	1.7	10	ND	
1,1,1,2-Tetrachloroethane	1.9	10	ND	
m,p-Xylene	3.2	10	ND	
o-Xylene	1.7	10	ND	

MB Summary Report

Work Order:	1804038	**Prep Method:**	5035	**Prep Date:**	04/12/18	**Prep Batch:**	1104235
Matrix:	Soil	**Analytical Method:**	SW8260B	**Analyzed Date:**	4/12/2018	**Analytical Batch:**	430973
Units:	ug/Kg						

Parameters	MDL	PQL	Method Blank Conc.	Lab Qualifier
Styrene	1.6	10	ND	
Bromoform	1.7	10	ND	
Isopropyl Benzene	1.6	10	ND	
n-Propylbenzene	1.6	10	ND	
Bromobenzene	1.8	10	ND	
1,1,2,2-Tetrachloroethane	1.9	10	ND	
2-Chlorotoluene	1.8	10	ND	
1,3,5-Trimethylbenzene	1.6	10	ND	
1,2,3-Trichloropropane	1.9	10	ND	
4-Chlorotoluene	1.6	10	ND	
tert-Butylbenzene	1.6	10	ND	
1,2,4-Trimethylbenzene	1.4	10	ND	
sec-Butyl Benzene	1.6	10	ND	
p-Isopropyltoluene	1.5	10	ND	
1,3-Dichlorobenzene	1.7	10	ND	
1,4-Dichlorobenzene	1.7	10	ND	
n-Butylbenzene	1.5	10	ND	
1,2-Dichlorobenzene	1.8	10	ND	
1,2-Dibromo-3-Chloropropane	1.8	10	ND	
Hexachlorobutadiene	1.4	10	1.5	
1,2,4-Trichlorobenzene	1.5	10	2.1	
Naphthalene	1.7	10	6.5	
1,2,3-Trichlorobenzene	1.7	10	2.7	
2-Butanone	1.7	10	5.0	
(S) Dibromofluoromethane			106	
(S) Toluene-d8			104	
(S) 4-Bromofluorobenzene			107	

MB Summary Report

Work Order:	1804038	**Prep Method:**	5035	**Prep Date:**	04/12/18	**Prep Batch:**	1104235
Matrix:	Soil	**Analytical Method:**	SW8260B	**Analyzed Date:**	4/12/2018	**Analytical Batch:**	430973
Units:	ug/Kg						

Parameters	MDL	PQL	Method Blank Conc.	Lab Qualifier
Dichlorodifluoromethane	120	1000	ND	
Chloromethane	180	1000	ND	
Vinyl Chloride	200	1000	ND	
Bromomethane	270	1000	ND	
Chloroethane	300	1000	ND	
Trichlorofluoromethane	210	1000	ND	
1,1-Dichloroethene	200	1000	ND	
Freon 113	190	1000	ND	
Methylene Chloride	710	1000	ND	
trans-1,2-Dichloroethene	210	1000	ND	
MTBE	230	1000	ND	
tert-Butanol	1200	5000	ND	
Diisopropyl ether (DIPE)	230	1000	ND	
1,1-Dichloroethane	220	1000	ND	
ETBE	230	1000	550	
cis-1,2-Dichloroethene	220	1000	ND	
2,2-Dichloropropane	190	1000	ND	
Bromochloromethane	230	1000	ND	
Chloroform	240	1000	ND	
Carbon Tetrachloride	210	1000	ND	
1,1,1-Trichloroethane	210	1000	ND	
1,1-Dichloropropene	200	1000	ND	
Benzene	220	1000	ND	
TAME	230	1000	560	
1,2-Dichloroethane	230	1000	ND	
Trichloroethylene	180	1000	ND	
Dibromomethane	180	1000	ND	
1,2-Dichloropropane	190	1000	ND	
Bromodichloromethane	200	1000	ND	
cis-1,3-Dichloropropene	160	1000	ND	
Toluene	180	1000	ND	
Tetrachloroethylene	170	1000	ND	
trans-1,3-Dichloropropene	160	1000	ND	
1,1,2-Trichloroethane	180	1000	ND	
Dibromochloromethane	190	1000	ND	
1,3-Dichloropropane	180	1000	ND	
1,2-Dibromoethane	180	1000	ND	
Chlorobenzene	180	1000	ND	
Ethyl Benzene	170	1000	ND	
1,1,1,2-Tetrachloroethane	190	1000	ND	
m,p-Xylene	320	1000	ND	
o-Xylene	170	1000	ND	

MB Summary Report

Work Order:	1804038	**Prep Method:**	5035	**Prep Date:**	04/12/18	**Prep Batch:**	1104235
Matrix:	Soil	**Analytical Method:**	SW8260B	**Analyzed Date:**	4/12/2018	**Analytical Batch:**	430973
Units:	ug/Kg						

Parameters	MDL	PQL	Method Blank Conc.	Lab Qualifier
Styrene	160	1000	ND	
Bromoform	170	1000	ND	
Isopropyl Benzene	160	1000	ND	
n-Propylbenzene	160	1000	ND	
Bromobenzene	180	1000	ND	
1,1,2,2-Tetrachloroethane	190	1000	ND	
2-Chlorotoluene	180	1000	ND	
1,3,5-Trimethylbenzene	160	1000	ND	
1,2,3-Trichloropropane	190	1000	ND	
4-Chlorotoluene	160	1000	ND	
tert-Butylbenzene	160	1000	ND	
1,2,4-Trimethylbenzene	140	1000	ND	
sec-Butyl Benzene	160	1000	ND	
p-Isopropyltoluene	150	1000	ND	
1,3-Dichlorobenzene	170	1000	ND	
1,4-Dichlorobenzene	170	1000	ND	
n-Butylbenzene	150	1000	ND	
1,2-Dichlorobenzene	180	1000	ND	
1,2-Dibromo-3-Chloropropane	180	1000	ND	
Hexachlorobutadiene	140	1000	ND	
1,2,4-Trichlorobenzene	150	1000	ND	
Naphthalene	170	1000	490	
1,2,3-Trichlorobenzene	170	1000	ND	
2-Butanone	170	1000	610	
(S) Dibromofluoromethane			106	
(S) Toluene-d8			102	
(S) 4-Bromofluorobenzene			105	

Work Order:	1804038	**Prep Method:**	5035GRO	**Prep Date:**	04/12/18	**Prep Batch:**	1104236
Matrix:	Soil	**Analytical Method:**	SW8260B	**Analyzed Date:**	4/12/2018	**Analytical Batch:**	430973
Units:	ug/Kg						

Parameters	MDL	PQL	Method Blank Conc.	Lab Qualifier
TPH(Gasoline)	43	100	ND	
(S) 4-Bromofluorobenzene			82.2	

MB Summary Report

Work Order:	1804038	**Prep Method:**	5035GRO	**Prep Date:**	04/12/18	**Prep Batch:**	1104236
Matrix:	Soil	**Analytical Method:**	SW8260B	**Analyzed Date:**	4/12/2018	**Analytical Batch:**	430973
Units:	ug/Kg						

Parameters	**MDL**	**PQL**	**Method Blank Conc.**	**Lab Qualifier**
TPH(Gasoline)	4300	10000	ND	
(S) 4-Bromofluorobenzene			84.6	

LCS/LCSD Summary Report

Raw values are used in quality control assessment.

Work Order:	1804038	**Prep Method:**	3546_TPH	**Prep Date:**	04/04/18	**Prep Batch:**	1103958
Matrix:	Soil	**Analytical Method:**	SW8015B	**Analyzed Date:**	4/4/2018	**Analytical Batch:**	430738
Units:	mg/Kg						

Parameters	MDL	PQL	Method Blank Conc.	Spike Conc.	LCS % Recovery	LCSD % Recovery	LCS/LCSD % RPD	% Recovery Limits	% RPD Limits	Lab Qualifier
TPH as Diesel	0.85	2.0	0.864	25.0	82.3	66.2	21.5	52 - 115	30	
Pentacosane (S)				200	124	83.8		59 - 129		

Work Order:	1804038	**Prep Method:**	5035	**Prep Date:**	04/05/18	**Prep Batch:**	1104009
Matrix:	Soil	**Analytical Method:**	SW8260B	**Analyzed Date:**	4/5/2018	**Analytical Batch:**	430772
Units:	ug/Kg						

Parameters	MDL	PQL	Method Blank Conc.	Spike Conc.	LCS % Recovery	LCSD % Recovery	LCS/LCSD % RPD	% Recovery Limits	% RPD Limits	Lab Qualifier
1,1-Dichloroethene	2.0	10	ND	50.0	70.5	79.4	12.0	53.7 - 139	30	
Benzene	2.2	10	ND	50.0	72.5	82.6	13.2	66.5 - 135	30	
Trichloroethylene	1.8	10	ND	50.0	73.2	84.6	14.4	57.5 - 150	30	
Toluene	1.8	10	ND	50.0	81.5	92.1	12.4	56.8 - 134	30	
Chlorobenzene	1.8	10	ND	50.0	77.5	89.2	13.9	57.4 - 134	30	
(S) Dibromofluoromethane				50.0	71.1	82.2		59.8 - 148		
(S) Toluene-d8				50.0	80.0	90.0		55.2 - 133		
(S) 4-Bromofluorobenzene				50.0	85.2	96.6		55.8 - 141		

Work Order:	1804038	**Prep Method:**	5035GRO	**Prep Date:**	04/05/18	**Prep Batch:**	1104010
Matrix:	Soil	**Analytical Method:**	SW8260B	**Analyzed Date:**	4/5/2018	**Analytical Batch:**	430772
Units:	ug/Kg						

Parameters	MDL	PQL	Method Blank Conc.	Spike Conc.	LCS % Recovery	LCSD % Recovery	LCS/LCSD % RPD	% Recovery Limits	% RPD Limits	Lab Qualifier
TPH(Gasoline)	43	100	ND	1000	114	113	0.881	48.2 - 132	30	
(S) 4-Bromofluorobenzene				50	114	123		43.9 - 127		

LCS/LCSD Summary Report

Raw values are used in quality control assessment.

Work Order:	1804038	**Prep Method:**	5035	**Prep Date:**	04/06/18	**Prep Batch:**	1104076
Matrix:	Soil	**Analytical Method:**	SW8260B	**Analyzed Date:**	4/7/2018	**Analytical Batch:**	430824
Units:	ug/Kg						

Parameters	MDL	PQL	Method Blank Conc.	Spike Conc.	LCS % Recovery	LCSD % Recovery	LCS/LCSD % RPD	% Recovery Limits	% RPD Limits	Lab Qualifier
1,1-Dichloroethene	2.0	10	ND	50.0	112	104	7.23	53.7 - 139	30	
Benzene	2.2	10	ND	50.0	108	102	5.51	66.5 - 135	30	
Trichloroethylene	1.8	10	ND	50.0	106	114	6.73	57.5 - 150	30	
Toluene	1.8	10	ND	50.0	106	113	6.58	56.8 - 134	30	
Chlorobenzene	1.8	10	ND	50.0	106	109	3.35	57.4 - 134	30	
(S) Dibromofluoromethane				50.0	111	104		59.8 - 148		
(S) Toluene-d8				50.0	109	119		55.2 - 133		
(S) 4-Bromofluorobenzene				50.0	111	110		55.8 - 141		

Work Order:	1804038	**Prep Method:**	5035GRO	**Prep Date:**	04/06/18	**Prep Batch:**	1104077
Matrix:	Soil	**Analytical Method:**	SW8260B	**Analyzed Date:**	4/7/2018	**Analytical Batch:**	430824
Units:	ug/Kg						

Parameters	MDL	PQL	Method Blank Conc.	Spike Conc.	LCS % Recovery	LCSD % Recovery	LCS/LCSD % RPD	% Recovery Limits	% RPD Limits	Lab Qualifier
TPH(Gasoline)	43	100	83	1000	112	99.6	11.7	48.2 - 132	30	
(S) 4-Bromofluorobenzene				50	126	116		43.9 - 127		

Work Order:	1804038	**Prep Method:**	5035	**Prep Date:**	04/08/18	**Prep Batch:**	1104088
Matrix:	Soil	**Analytical Method:**	SW8260B	**Analyzed Date:**	4/8/2018	**Analytical Batch:**	430841
Units:	ug/Kg						

Parameters	MDL	PQL	Method Blank Conc.	Spike Conc.	LCS % Recovery	LCSD % Recovery	LCS/LCSD % RPD	% Recovery Limits	% RPD Limits	Lab Qualifier
1,1-Dichloroethene	2.0	10	ND	50.0	92.6	89.2	3.74	53.7 - 139	30	
Benzene	2.2	10	ND	50.0	106	104	1.53	66.5 - 135	30	
Trichloroethylene	1.8	10	ND	50.0	107	107	0.560	57.5 - 150	30	
Toluene	1.8	10	ND	50.0	107	106	0.750	56.8 - 134	30	
Chlorobenzene	1.8	10	ND	50.0	107	107	0.187	57.4 - 134	30	
(S) Dibromofluoromethane				50.0	108	107		59.8 - 148		
(S) Toluene-d8				50.0	106	106		55.2 - 133		
(S) 4-Bromofluorobenzene				50.0	108	108		55.8 - 141		

LCS/LCSD Summary Report

Raw values are used in quality control assessment.

Work Order:	1804038	**Prep Method:**	5035	**Prep Date:**	04/09/18	**Prep Batch:**	1104109
Matrix:	Soil	**Analytical Method:**	SW8260B	**Analyzed Date:**	4/9/2018	**Analytical Batch:**	430855
Units:	ug/Kg						

Parameters	MDL	PQL	Method Blank Conc.	Spike Conc.	LCS % Recovery	LCSD % Recovery	LCS/LCSD % RPD	% Recovery Limits	% RPD Limits	Lab Qualifier
1,1-Dichloroethene	2.0	10	ND	50.0	89.2	89.1	0.000	53.7 - 139	30	
Benzene	2.2	10	ND	50.0	108	109	0.922	66.5 - 135	30	
Trichloroethylene	1.8	10	ND	50.0	105	105	0.382	57.5 - 150	30	
Toluene	1.8	10	ND	50.0	108	109	0.739	56.8 - 134	30	
Chlorobenzene	1.8	10	ND	50.0	108	110	1.83	57.4 - 134	30	
(S) Dibromofluoromethane				50.0	111	112		59.8 - 148		
(S) Toluene-d8				50.0	108	108		55.2 - 133		
(S) 4-Bromofluorobenzene				50.0	109	110		55.8 - 141		

Work Order:	1804038	**Prep Method:**	5035GRO	**Prep Date:**	04/09/18	**Prep Batch:**	1104111
Matrix:	Soil	**Analytical Method:**	SW8260B	**Analyzed Date:**	4/9/2018	**Analytical Batch:**	430855
Units:	ug/Kg						

Parameters	MDL	PQL	Method Blank Conc.	Spike Conc.	LCS % Recovery	LCSD % Recovery	LCS/LCSD % RPD	% Recovery Limits	% RPD Limits	Lab Qualifier
TPH(Gasoline)	43	100	ND	1000	107	104	2.84	48.2 - 132	30	
(S) 4-Bromofluorobenzene				50	121	124		43.9 - 127		

Work Order:	1804038	**Prep Method:**	5035	**Prep Date:**	04/12/18	**Prep Batch:**	1104235
Matrix:	Soil	**Analytical Method:**	SW8260B	**Analyzed Date:**	4/12/2018	**Analytical Batch:**	430973
Units:	ug/Kg						

Parameters	MDL	PQL	Method Blank Conc.	Spike Conc.	LCS % Recovery	LCSD % Recovery	LCS/LCSD % RPD	% Recovery Limits	% RPD Limits	Lab Qualifier
1,1-Dichloroethene	2.0	10	ND	50.0	107	102	4.77	53.7 - 139	30	
Benzene	2.2	10	ND	50.0	117	116	1.03	66.5 - 135	30	
Trichloroethylene	1.8	10	ND	50.0	113	111	1.97	57.5 - 150	30	
Toluene	1.8	10	ND	50.0	118	119	1.02	56.8 - 134	30	
Chlorobenzene	1.8	10	ND	50.0	116	114	2.26	57.4 - 134	30	
(S) Dibromofluoromethane				50.0	109	112		59.8 - 148		
(S) Toluene-d8				50.0	112	111		55.2 - 133		
(S) 4-Bromofluorobenzene				50.0	116	118		55.8 - 141		

LCS/LCSD Summary Report

Raw values are used in quality control assessment.

Work Order:	1804038	**Prep Method:**	5035GRO	**Prep Date:**	04/12/18	**Prep Batch:**	1104236
Matrix:	Soil	**Analytical Method:**	SW8260B	**Analyzed Date:**	4/13/2018	**Analytical Batch:**	430973
Units:	ug/Kg						

Parameters	MDL	PQL	Method Blank Conc.	Spike Conc.	LCS % Recovery	LCSD % Recovery	LCS/LCSD % RPD	% Recovery Limits	% RPD Limits	Lab Qualifier
TPH(Gasoline)	43	100	ND	1000	88.4	88.0	0.454	48.2 - 132	30	
(S) 4-Bromofluorobenzene				50	81.9	88.4		43.9 - 127		

Laboratory Qualifiers and Definitions

DEFINITIONS:

Accuracy/Bias (% Recovery) - The closeness of agreement between an observed value and an accepted reference value.
Blank (Method/Preparation Blank) -MB/PB - An analyte-free matrix to which all reagents are added in the same volumes/proportions as used in sample processing. The method blank is used to document contamination resulting from the analytical process.
Duplicate - a field sample and/or laboratory QC sample prepared in duplicate following all of the same processes and procedures used on the original sample (sample duplicate, LCSD, MSD)
Laboratory Control Sample (LCS ad LCSD) - A known matrix spiked with compounds representative of the target analyte(s). This is used to document laboratory performance.
Matrix - the component or substrate that contains the analyte of interest (e.g., - groundwater, sediment, soil, waste water, etc)
Matrix Spike (MS/MSD) - Client sample spiked with identical concentrations of target analyte (s). The spiking occurs prior to the sample preparation and analysis. They are used to document the precision and bias of a method in a given sample matrix.
Method Detection Limit (MDL) - the minimum concentration of a substance that can be measured and reported with a 99% confidence that the analyte concentration is greater than zero
Practical Quantitation Limit/Reporting Limit/Limit of Quantitation (PQL/RL/LOQ) - a laboratory determined value at 2 to 5 times above the MDL that can be reproduced in a manner that results in a 99% confidence level that the result is both accurate and precise. PQLs/RLs/LODs reflect all preparation factors and/or dilution factors that have been applied to the sample during the preparation and/or analytical processes.
Precision (%RPD) - The agreement among a set of replicate/duplicate measurements without regard to known value of the replicates
Surrogate (S) or (Surr) - An organic compound which is similar to the target analyte(s) in chemical composition and behavior in the analytical process, but which is not normally found in environmental samples. Surrogates are used in most organic analysis to demonstrate matrix compatibility with the chosen method of analysis
Tentatively Identified Compound (TIC) - A compound not contained within the analytical calibration standards but present in the GCMS library of defined compounds. When the library is searched for an unknown compound, it can frequently give a tentative identification to the compound based on retention time and primary and secondary ion match. TICs are reported as estimates and are candidates for further investigation.
Units: the unit of measure used to express the reported result - **mg/L** and ***mg/Kg*** (equivalent to PPM - parts per million in **liquid** and ***solid***), **ug/L** and ***ug/Kg*** (equivalent to PPB - parts per billion in **liquid** and ***solid***), **ug/m3**, ***mg/m3***, **ppbv** and ***ppmv*** (all units of measure for reporting concentrations in air), **%** (equivalent to 10000 ppm or 1,000,000 ppb), **ug/Wipe** (concentration found on the surface of a single Wipe usually taken over a 100cm2 surface)

LABORATORY QUALIFIERS:

B - Indicates when the analyte is found in the associated method or preparation blank
D - Surrogate is not recoverable due to the necessary dilution of the sample
E - Indicates the reportable value is outside of the calibration range of the instrument but within the linear range of the instrument (unless otherwise noted) Values reported with an E qualifier should be considered as estimated.
H- Indicates that the recommended holding time for the analyte or compound has been exceeded
J- Indicates a value between the method MDL and PQL and that the reported concentration should be considered as estimated rather the quantitative
NA - Not Analyzed
N/A - Not Applicable
ND - Not Detected at a concentration greater than the PQL/RL or, if reported to the MDL, at greater than the MDL.
NR - Not recoverable - a matrix spike concentration is not recoverable due to a concentration within the original sample that is greater than four times the spike concentration added
R- The % RPD between a duplicate set of samples is outside of the absolute values established by laboratory control charts
S- Spike recovery is outside of established method and/or laboratory control limits. Further explanation of the use of this qualifier should be included within a case narrative
X -Used to indicate that a value based on pattern identification is within the pattern range but not typical of the pattern found in standards. Further explanation may or may not be provided within the sample footnote and/or the case narrative.

Sample Receipt Checklist

Client Name: Cornerstone Earth Group

Project Name: 1433-1493 El Camino Real

Work Order No.: 1804038

Date and Time Received: 4/4/2018 4:15:00PM

Received By: Kathie Evans

Physically Logged By: Helena Ueng

Checklist Completed By: Helena Ueng

Carrier Name: Client Drop Off

Chain of Custody (COC) Information

Chain of custody present?	Yes
Chain of custody signed when relinquished and received?	Yes
Chain of custody agrees with sample labels?	Yes
Custody seals intact on sample bottles?	Not Present

Sample Receipt Information

Custody seals intact on shipping container/cooler?	Not Present
Shipping Container/Cooler In Good Condition?	Yes
Samples in proper container/bottle?	Yes
Samples containers intact?	Yes
Sufficient sample volume for indicated test?	Yes

Sample Preservation and Hold Time (HT) Information

All samples received within holding time?	Yes			
Container/Temp Blank temperature in compliance?	Yes	Temperature:	2.0	°C
Water-VOA vials have zero headspace?	No VOA vials submitted			
Water-pH acceptable upon receipt?	N/A			

pH Checked by: N/A

pH Adjusted by: N/A

Comments:

Login Summary Report

Client ID:	TL5119	Cornerstone Earth Group	**QC Level:**	II
Project Name:	1433-1493 El Camino Real		**TAT Requested:**	3 Day Std:3
Project # :	958-1-5		**Date Received:**	4/4/2018
Report Due Date:	4/13/2018		**Time Received:**	4:15 pm

Comments:

Work Order # : ***1804038***

WO Sample ID	Client Sample ID	Collection Date/Time	Matrix	Scheduled Disposal	Sample On Hold	Test On Hold	Requested Tests	Subbed
1804038-001A	EB-14 (20-20.5)	04/04/18 8:57	Soil	10/01/18			TPHDO_S_8015(Mod)	
Sample Note:	TPH-D							
1804038-001B	EB-14 (20-20.5)	04/04/18 8:57	Soil	10/01/18			EN_VOC_8260B VOC_S_GRO	
Sample Note:	Encores							
1804038-002A	EB-14 (25.5-26)	04/04/18 9:01	Soil	10/01/18			TPHDO_S_8015(Mod)	
1804038-002B	EB-14 (25.5-26)	04/04/18 9:01	Soil	10/01/18			VOC_S_GRO EN_VOC_8260B	
1804038-003A	EB-14 (29.5-30)	04/04/18 9:05	Soil	10/01/18			TPHDO_S_8015(Mod)	
1804038-003B	EB-14 (29.5-30)	04/04/18 9:05	Soil	10/01/18			EN_VOC_8260B VOC_S_GRO	
1804038-004A	EB-15 (4.5-5)	04/04/18 9:54	Soil	10/01/18			TPHDO_S_8015(Mod)	
1804038-004B	EB-15 (4.5-5)	04/04/18 9:54	Soil	10/01/18			EN_VOC_8260B VOC_S_GRO	
1804038-005A	EB-15 (9.5-10)	04/04/18 9:48	Soil	10/01/18			TPHDO_S_8015(Mod)	
1804038-005B	EB-15 (9.5-10)	04/04/18 9:48	Soil	10/01/18			VOC_S_GRO EN_VOC_8260B	
1804038-006A	EB-15 (14.5-15)	04/04/18 9:50	Soil	10/01/18			TPHDO_S_8015(Mod)	
1804038-006B	EB-15 (14.5-15)	04/04/18 9:50	Soil	10/01/18			EN_VOC_8260B VOC_S_GRO	

Login Summary Report

Client ID:	TL5119	Cornerstone Earth Group	**QC Level:**	II
Project Name:	1433-1493 El Camino Real		**TAT Requested:**	3 Day Std:3
Project # :	958-1-5		**Date Received:**	4/4/2018
Report Due Date:	4/13/2018		**Time Received:**	4:15 pm

Comments:

Work Order # : ***1804038***

WO Sample ID	Client Sample ID	Collection Date/Time	Matrix	Scheduled Disposal	Sample On Hold	Test On Hold	Requested Tests	Subbed
1804038-007A	EB-15 (19.5-20)	04/04/18 9:55	Soil	10/01/18			Hold Samples	
1804038-007B	EB-15 (19.5-20)	04/04/18 9:55	Soil	10/01/18			Hold Samples	
1804038-008A	EB-16 (4.5-5)	04/04/18 10:48	Soil	10/01/18			TPHDO_S_8015(Mod)	
1804038-008B	EB-16 (4.5-5)	04/04/18 10:48	Soil	10/01/18			EN_VOC_8260B VOC_S_GRO	
1804038-009A	EB-16 (9.5-10)	04/04/18 10:50	Soil	10/01/18			TPHDO_S_8015(Mod)	
1804038-009B	EB-16 (9.5-10)	04/04/18 10:50	Soil	10/01/18			EN_VOC_8260B VOC_S_GRO	
1804038-010A	EB-16 (14.5-15)	04/04/18 10:54	Soil	10/01/18			TPHDO_S_8015(Mod)	
1804038-010B	EB-16 (14.5-15)	04/04/18 10:54	Soil	10/01/18			VOC_S_GRO EN_VOC_8260B	
1804038-011A	EB-16 (19.5-20)	04/04/18 10:57	Soil	10/01/18			Hold Samples	
1804038-011B	EB-16 (19.5-20)	04/04/18 10:57	Soil	10/01/18			Hold Samples	
1804038-012A	EB-17 (4.5-5)	04/04/18 11:31	Soil	10/01/18			TPHDO_S_8015(Mod)	
1804038-012B	EB-17 (4.5-5)	04/04/18 11:31	Soil	10/01/18			VOC_S_GRO EN_VOC_8260B	
1804038-013A	EB-17 (9.5-10)	04/04/18 11:33	Soil	10/01/18			TPHDO_S_8015(Mod)	
1804038-013B	EB-17 (9.5-10)	04/04/18 11:33	Soil	10/01/18			VOC_S_GRO EN_VOC_8260B	

Login Summary Report

Client ID: TL5119 Cornerstone Earth Group

Project Name: 1433-1493 El Camino Real

Project # : 958-1-5

Report Due Date: 4/13/2018

QC Level: II

TAT Requested: 3 Day Std:3

Date Received: 4/4/2018

Time Received: 4:15 pm

Comments:

Work Order # : ***1804038***

WO Sample ID	Client Sample ID	Collection Date/Time	Matrix	Scheduled Disposal	Sample On Hold	Test On Hold	Requested Tests	Subbed
1804038-014A	EB-17 (14.5-15)	04/04/18 11:36	Soil	10/01/18			TPHDO_S_8015(Mod)	
1804038-014B	EB-17 (14.5-15)	04/04/18 11:36	Soil	10/01/18			VOC_S_GRO EN_VOC_8260B	
1804038-015A	EB-17 (16.5-17)	04/04/18 11:41	Soil	10/01/18			Hold Samples	
1804038-015B	EB-17 (16.5-17)	04/04/18 11:41	Soil	10/01/18			Hold Samples	
1804038-016A	EB-17 (19.5-20)	04/04/18 11:38	Soil	10/01/18			Hold Samples	
1804038-016B	EB-17 (19.5-20)	04/04/18 11:38	Soil	10/01/18			Hold Samples	
1804038-017A	EB-19 (4.5-5)	04/04/18 12:03	Soil	10/01/18			TPHDO_S_8015(Mod)	
1804038-017B	EB-19 (4.5-5)	04/04/18 12:03	Soil	10/01/18			VOC_S_GRO EN_VOC_8260B	
1804038-018A	EB-19 (9.5-10)	04/04/18 12:06	Soil	10/01/18			TPHDO_S_8015(Mod)	
1804038-018B	EB-19 (9.5-10)	04/04/18 12:06	Soil	10/01/18			VOC_S_GRO EN_VOC_8260B	
1804038-019A	EB-19 (16.5-17)	04/04/18 12:09	Soil	10/01/18			TPHDO_S_8015(Mod)	
1804038-019B	EB-19 (16.5-17)	04/04/18 12:09	Soil	10/01/18			EN_VOC_8260B VOC_S_GRO	
1804038-020A	EB-19 (19.5-20)	04/04/18 12:12	Soil	10/01/18			Hold Samples	
1804038-020B	EB-19 (19.5-20)	04/04/18 12:12	Soil	10/01/18			Hold Samples EN_VOC_8260B VOC_S_GRO	

Torrent LABORATORY, INC.

CORNERSTONE EARTH GROUP

Chain of Custody Record

1804038

Cornerstone Earth Group, Inc.	Project Manager: Peter Langtry	Site Sampler: Sarah Kuehn	Date: 4/4/18
	Tel/Fax: 408-245-4600 ext. 101	Lab Contact: Kathie	Lab: Torrent
1259 Oakmead Pkwy	Analysis Turnaround Time		
Sunnyvale, California 94085			
(408) 245-4600 Phone	TAT if different from Below _____		
(408) 245-4620 FAX	☐ 1 week		
Project Name: 1433-1493 El Camino Real	■ 3 days		
Site: Santa Clara, California	☐ 2 days		
Project Number: 958-1-5	☐ 1 day		

COC No: 1 of 4 COCs

Laboratory's Job No.

	Sample Identification	Sample Date	Sample Time	Sample Type	Matrix	# of Cont.	Filtered Sample	TPHd EPA 8015B	VOCs + TPHg EPA 8260	Hold	Laboratory's Sample Specific Notes:
-001A/B	EB-14 (20-20.5)	4/4/18	8:57	Liner + CNOC	soil	4		X	X		
-002A/B	EB-14 (25.5-26)		9:01					X	X		
-003A/B	EB-14 (29.5-30)		9:05					X	X		
-004A/B	EB-15 (4.5-5)		9:54					X	X		
-005A/B	EB-15 (9.5-10)		9:48					X	X		
-006A/B	EB-15 (14.5-15)		9:50					X	X		
-007A/B	EB-15 (19.5-20)		9:55							X	
-008A/B	EB-16 (4.5-5)		10:48					X	X		
-009A/B	EB-16 (9.5-10)		10:50					X	X		
-010A/B	EB-16 (14.5-15)		10:54					X	X		
-011A/B	EB-16 (19.5-20)		10:57							X	

Preservation Used: 1= Ice, 2= HCl; 3= H2SO4; 4=HNO3; 5=NaOH; 6= Other _____

Possible Hazard Identification
☐ *Non-Hazard* ☐ *Flammable* ☐ *Skin Irritant* ☐ *Poison B* ☐ *Unknown*

Sample Disposal
☐ *Return To Client* ☐ *Disposal By Lab* ☐ *Archive For* _____ *Months*

Special Instructions/QC Requirements & Comments: If additional sample is needed, please use the liner.

Relinquished by:	Company:	Date/Time:	Received by:	Company:	Date/Time:
[signature]	Cornerstone Earth Group	4/4 16:15	Kathie [signature]	Torrent	4-4-18 16:15
Relinquished by:	Company:	Date/Time:	Received by:	Company:	Date/Time:
Relinquished by:	Company:	Date/Time:	Received by:	Company:	Date/Time:

2°C #2 D/off

Torrent LABORATORY, INC.

CORNERSTONE EARTH GROUP

Chain of Custody Record

1804038

	Project Manager: Peter Langtry	Site Sampler: Sarah Kuehn	Date: 4/4/18
Cornerstone Earth Group, Inc.	Tel/Fax: 408-245-4600 ext. 101	Lab Contact: Kathie	Lab: Torrent
1259 Oakmead Pkwy	Analysis Turnaround Time		
Sunnyvale, California 94085			
(408) 245-4600 Phone	TAT if different from Below _____		
(408) 245-4620 FAX	☐ 1 week		
Project Name: 1433-1493 El Camino Real	☐ 3 days		
Site: Santa Clara, California	☐ 2 days		
Project Number: 958-1-5	☐ 1 day		

COC No: 2 of 4 COCs

Laboratory's Job No.

	Sample Identification	Sample Date	Sample Time	Sample Type	Matrix	# of Cont.	Filtered Sample	TPHd EPA 8015B	VOCs + TPHg EPA 8260	Hold	Laboratory's Sample Specific Notes:
-012A/B	EB-17 (4.5-5)	4/4/18	11:31	Liner Encor	soil	4		X	X		
-013A/B	EB-17 (9.5-10)	↓	11:33	↓	↓	↓		X	X		
-014A/B	EB-17 (14.5-15)		11:36					X	X		
-015A/B	EB-17 (16.5-17)		11:41							X	
-016A/B	EB-17 (19.5-20)		11:38							X	
-017A/B	EB-19 (4.5-5)		12:03					X	X		
-018A/B	EB-19 (9.5-10)		12:06					X	X		
-019A/B	EB-19 (16.5-17)		12:09					X	X		
-020A/B	EB-19 (19.5-20)	↓	12:12	↓	↓	↓				X	

Preservation Used: 1= Ice, 2= HCl; 3= H2SO4; 4=HNO3; 5=NaOH; 6= Other _____

Possible Hazard Identification
☐ *Non-Hazard* ☐ *Flammable* ☐ *Skin Irritant* ☐ *Poison B* ☐ *Unknown*

Sample Disposal
☐ *Return To Client* ☐ *Disposal By Lab* ☐ *Archive For* _____ *Months*

Special Instructions/QC Requirements & Comments: If additional sample is needed, please use the liner.

Relinquished by:	Company:	Date/Time:	Received by:	Company:	Date/Time:
[signature]	Cornerstone Earth Group	16:15 4/4	Latrice Ellis	Torrent	4-4-18 16:15

20°C #2 D/O

Torrent LABORATORY, INC.

Torrent LABORATORY, INC.

Change Order

Work Order: 1804038 **Serial #:** CO18-0163 **Print Date:** 4/10/2018

Project Name: 1433-1493 El Camino Real

Client: Cornerstone Earth Group **Requested By:** Peter Langtry

	Requested Date	Requested Time	Extended Price
Samples Off Hold--Analyze 020B for TPHg/VOCs; 3 day STD TAT	4/10/2018	11:30:00AM	

Page 1 of 1

483 Sinclair Frontage Rd., Milpitas, CA 95035 | tel: 408.263.5258 | fax: 408.263.8293 | www.torrentlab.com

Cornerstone Earth Group
1259 Oakmead Parkway
Sunnyvale, California 94035
Tel: (408) 245-4600
Fax: (408) 245-4620

RE: 1433 El Camino Real, Santa Clara

Work Order No.: 1804065

Dear Peter Langtry:

Torrent Laboratory, Inc. received 5 sample(s) on April 06, 2018 for the analyses presented in the following Report.

All data for associated QC met EPA or laboratory specification(s) except where noted in the case narrative.

Torrent Laboratory, Inc. is certified by the State of California, ELAP #1991 If you have any questions regarding these test results, please feel free to contact the Project Management Team at (408)263-5258; ext 204.

Patti L Sandrock
QA Officer

April 11, 2018
Date

Date: 4/11/2018

Client: Cornerstone Earth Group

Project: 1433 El Camino Real, Santa Clara

Work Order: 1804065

CASE NARRATIVE

No issues encountered with the receiving, preparation, analysis or reporting of the results associated with this work order.

Unless otherwise indicated in the following narrative, no results have been method and/or field blank corrected.

Reported results relate only to the items/samples tested by the laboratory.

This report shall not be reproduced, except in full, without the written approval of Torrent Analytical, Inc.

REVISIONS

Report revised to include TPH gasoline data.

Rev. 1 (4/23/18)

Sample Result Summary

Report prepared for: Peter Langtry
Cornerstone Earth Group

Date Received: 04/06/18
Date Reported: 04/11/18

SV-1 1804065-001

Parameters:	Analysis Method	DF	MDL	PQL	Results ug/m3
Dichlorodifluoromethane	ETO15	1	1.6	2.5	2.5
2-Propanol (Isopropyl Alcohol)	ETO15	1	1.3	12	17
2-Butanone (MEK)	ETO15	1	0.39	1.5	1.8
Toluene	ETO15	1	0.75	1.9	3.8
Tetrachloroethylene	ETO15	1	1.5	3.4	7.5
m,p-Xylene	ETO15	1	0.98	2.2	3.4
TPH-Gasoline	TO-15	1	40	180	851

SV-2 1804065-002

Parameters:	Analysis Method	DF	MDL	PQL	Results ug/m3
1,1,1-Trichloroethane	ETO15	1	0.79	2.7	28
Tetrachloroethylene	ETO15	1	1.5	3.4	16
TPH-Gasoline	TO-15	1	40	180	283

SV-4 1804065-003

Parameters:	Analysis Method	DF	MDL	PQL	Results ug/m3
1,1,1-Trichloroethane	ETO15	1	0.79	2.7	4.7
2-Butanone (MEK)	ETO15	1	0.39	1.5	1.6
Tetrachloroethylene	ETO15	1	1.5	3.4	6.0
TPH-Gasoline	TO-15	1	40	180	829

SV-3 1804065-004

Parameters:	Analysis Method	DF	MDL	PQL	Results ug/m3
1,1,1-Trichloroethane	ETO15	1	0.79	2.7	17
2-Butanone (MEK)	ETO15	1	0.39	1.5	1.5
Tetrachloroethylene	ETO15	1	1.5	3.4	18
TPH-Gasoline	TO-15	1	40	180	264

SV-3(IPA) 1804065-005

Parameters:	Analysis Method	DF	MDL	PQL	Results ug/m3
2-Propanol (Isopropyl Alcohol)	ETO15	2000	2600	25000	110000

Torrent LABORATORY, INC.

SAMPLE RESULTS

Report prepared for: Peter Langtry
Cornerstone Earth Group

Date/Time Received: 04/06/18, 4:30 pm
Date Reported: 04/11/18

Client Sample ID:	SV-1	**Lab Sample ID:**	1804065-001A
Project Name/Location:	1433 El Camino Real, Santa Clara	**Sample Matrix:**	Soil Vapor
Project Number:	P 7454		
Date/Time Sampled:	04/06/18 / 12:24	**Certified Clean WO # :**	
Canister/Tube ID:	N1424	**Received PSI :**	12.5
Collection Volume (L):		**Corrected PSI :**	
SDG:			

Prep Method:	TO15-P	**Prep Batch Date/Time:**	4/9/18	8:04:00PM
Prep Batch ID:	1104133	**Prep Analyst:**	BALI	

Parameters:	Analysis Method	DF	MDL ug/m3	PQL ug/m3	Results ug/m3	Results ppbv	Q	Analyzed	Time	By	Analytical Batch
Dichlorodifluoromethane	ETO15	1.00	1.6	2.5	2.5	0.51		04/09/18	23:32	BA	430884
1,1-Difluoroethane	ETO15	1.00	0.35	14	ND	ND		04/09/18	23:32	BA	430884
1,2-Dichlorotetrafluoroethane	ETO15	1.00	28	56	ND	ND		04/09/18	23:32	BA	430884
Chloromethane	ETO15	1.00	2.0	4.1	ND	ND		04/09/18	23:32	BA	430884
Vinyl Chloride	ETO15	1.00	0.23	1.3	ND	ND		04/09/18	23:32	BA	430884
1,3-Butadiene	ETO15	1.00	0.34	1.1	ND	ND		04/09/18	23:32	BA	430884
Bromomethane	ETO15	1.00	0.66	1.9	ND	ND		04/09/18	23:32	BA	430884
Chloroethane	ETO15	1.00	0.81	1.3	ND	ND		04/09/18	23:32	BA	430884
Trichlorofluoromethane	ETO15	1.00	0.56	2.8	ND	ND		04/09/18	23:32	BA	430884
1,1-Dichloroethene	ETO15	1.00	0.83	2.0	ND	ND		04/09/18	23:32	BA	430884
Freon 113	ETO15	1.00	1.0	3.8	ND	ND		04/09/18	23:32	BA	430884
Carbon Disulfide	ETO15	1.00	0.37	1.6	ND	ND		04/09/18	23:32	BA	430884
2-Propanol (Isopropyl Alcohol)	ETO15	1.00	1.3	12	17	6.91		04/09/18	23:32	BA	430884
Methylene Chloride	ETO15	1.00	0.70	10	ND	ND		04/09/18	23:32	BA	430884
Acetone	ETO15	1.00	0.40	12	ND	ND		04/09/18	23:32	BA	430884
trans-1,2-Dichloroethene	ETO15	1.00	0.48	2.0	ND	ND		04/09/18	23:32	BA	430884
Hexane	ETO15	1.00	0.46	1.8	ND	ND		04/09/18	23:32	BA	430884
MTBE	ETO15	1.00	0.44	1.8	ND	ND		04/09/18	23:32	BA	430884
tert-Butanol	ETO15	1.00	0.62	1.5	ND	ND		04/09/18	23:32	BA	430884
Diisopropyl ether (DIPE)	ETO15	1.00	0.74	2.1	ND	ND		04/09/18	23:32	BA	430884
1,1-Dichloroethane	ETO15	1.00	0.54	2.0	ND	ND		04/09/18	23:32	BA	430884
ETBE	ETO15	1.00	0.33	2.1	ND	ND		04/09/18	23:32	BA	430884
cis-1,2-Dichloroethene	ETO15	1.00	0.83	2.0	ND	ND		04/09/18	23:32	BA	430884
Chloroform	ETO15	1.00	0.97	2.4	ND	ND		04/09/18	23:32	BA	430884
Vinyl Acetate	ETO15	1.00	0.76	1.8	ND	ND		04/09/18	23:32	BA	430884
Carbon Tetrachloride	ETO15	1.00	1.1	3.1	ND	ND		04/09/18	23:32	BA	430884
1,1,1-Trichloroethane	ETO15	1.00	0.79	2.7	ND	ND		04/09/18	23:32	BA	430884
2-Butanone (MEK)	ETO15	1.00	0.39	1.5	1.8	0.61		04/09/18	23:32	BA	430884
Ethyl Acetate	ETO15	1.00	0.48	1.8	ND	ND		04/09/18	23:32	BA	430884
Tetrahydrofuran	ETO15	1.00	0.45	1.5	ND	ND		04/09/18	23:32	BA	430884
Benzene	ETO15	1.00	0.44	1.6	ND	ND		04/09/18	23:32	BA	430884
TAME	ETO15	1.00	0.67	2.1	ND	ND		04/09/18	23:32	BA	430884
1,2-Dichloroethane (EDC)	ETO15	1.00	0.42	2.0	ND	ND		04/09/18	23:32	BA	430884

Torrent LABORATORY, INC.

SAMPLE RESULTS

Report prepared for: Peter Langtry
Cornerstone Earth Group

Date/Time Received: 04/06/18, 4:30 pm
Date Reported: 04/11/18

Client Sample ID:	SV-1	**Lab Sample ID:**	1804065-001A
Project Name/Location:	1433 El Camino Real, Santa Clara	**Sample Matrix:**	Soil Vapor
Project Number:	P 7454		
Date/Time Sampled:	04/06/18 / 12:24	**Certified Clean WO # :**	
Canister/Tube ID:	N1424	**Received PSI :**	12.5
Collection Volume (L):		**Corrected PSI :**	
SDG:			

Prep Method:	TO15-P	**Prep Batch Date/Time:**	4/9/18	8:04:00PM
Prep Batch ID:	1104133	**Prep Analyst:**	BALI	

Parameters:	Analysis Method	DF	MDL ug/m3	PQL ug/m3	Results ug/m3	Results ppbv	Q	Analyzed	Time	By	Analytical Batch
Trichloroethylene	ETO15	1.00	0.81	2.7	ND	ND		04/09/18	23:32	BA	430884
1,2-Dichloropropane	ETO15	1.00	0.76	2.3	ND	ND		04/09/18	23:32	BA	430884
Bromodichloromethane	ETO15	1.00	0.74	3.4	ND	ND		04/09/18	23:32	BA	430884
1,4-Dioxane	ETO15	1.00	1.8	3.6	ND	ND		04/09/18	23:32	BA	430884
trans-1,3-Dichloropropene	ETO15	1.00	1.1	2.3	ND	ND		04/09/18	23:32	BA	430884
Toluene	ETO15	1.00	0.75	1.9	3.8	1.01		04/09/18	23:32	BA	430884
4-Methyl-2-Pentanone (MIBK)	ETO15	1.00	0.75	2.1	ND	ND		04/09/18	23:32	BA	430884
cis-1,3-Dichloropropene	ETO15	1.00	0.42	2.3	ND	ND		04/09/18	23:32	BA	430884
Tetrachloroethylene	ETO15	1.00	1.5	3.4	7.5	1.11		04/09/18	23:32	BA	430884
1,1,2-Trichloroethane	ETO15	1.00	0.58	2.7	ND	ND		04/09/18	23:32	BA	430884
Dibromochloromethane	ETO15	1.00	1.1	4.3	ND	ND		04/09/18	23:32	BA	430884
1,2-Dibromoethane (EDB)	ETO15	1.00	0.74	3.8	ND	ND		04/09/18	23:32	BA	430884
2-Hexanone	ETO15	1.00	0.65	2.1	ND	ND		04/09/18	23:32	BA	430884
Ethyl Benzene	ETO15	1.00	0.63	2.2	ND	ND		04/09/18	23:32	BA	430884
Chlorobenzene	ETO15	1.00	0.60	2.3	ND	ND		04/09/18	23:32	BA	430884
1,1,1,2-Tetrachloroethane	ETO15	1.00	0.84	3.4	ND	ND		04/09/18	23:32	BA	430884
m,p-Xylene	ETO15	1.00	0.98	2.2	3.4	0.78		04/09/18	23:32	BA	430884
o-Xylene	ETO15	1.00	0.30	2.2	ND	ND		04/09/18	23:32	BA	430884
Styrene	ETO15	1.00	0.46	2.1	ND	ND		04/09/18	23:32	BA	430884
Bromoform	ETO15	1.00	1.3	5.2	ND	ND		04/09/18	23:32	BA	430884
1,1,2,2-Tetrachloroethane	ETO15	1.00	0.82	3.4	ND	ND		04/09/18	23:32	BA	430884
4-Ethyl Toluene	ETO15	1.00	0.55	2.5	ND	ND		04/09/18	23:32	BA	430884
1,3,5-Trimethylbenzene	ETO15	1.00	0.30	2.5	ND	ND		04/09/18	23:32	BA	430884
1,2,4-Trimethylbenzene	ETO15	1.00	0.60	2.5	ND	ND		04/09/18	23:32	BA	430884
1,4-Dichlorobenzene	ETO15	1.00	0.75	3.0	ND	ND		04/09/18	23:32	BA	430884
1,3-Dichlorobenzene	ETO15	1.00	1.3	3.0	ND	ND		04/09/18	23:32	BA	430884
1,2-Dichlorobenzene	ETO15	1.00	1.1	3.0	ND	ND		04/09/18	23:32	BA	430884
Hexachlorobutadiene	ETO15	1.00	1.9	5.3	ND	ND		04/09/18	23:32	BA	430884
1,2,4-Trichlorobenzene	ETO15	1.00	2.2	3.7	ND	ND		04/09/18	23:32	BA	430884
Naphthalene	ETO15	1.00	1.3	2.6	ND	ND		04/09/18	23:32	BA	430884
(S) 4-Bromofluorobenzene	ETO15	1.00	50	150	110 %			04/09/18	23:32	BA	430884

SAMPLE RESULTS

Report prepared for: Peter Langtry
Cornerstone Earth Group

Date/Time Received: 04/06/18, 4:30 pm
Date Reported: 04/11/18

Client Sample ID:	SV-1	**Lab Sample ID:**	1804065-001A
Project Name/Location:	1433 El Camino Real, Santa Clara	**Sample Matrix:**	Soil Vapor
Project Number:	P 7454		
Date/Time Sampled:	04/06/18 / 12:24	**Certified Clean WO # :**	
Canister/Tube ID:	N1424	**Received PSI :**	12.5
Collection Volume (L):		**Corrected PSI :**	
SDG:			

Prep Method:	TO15-GRO	**Prep Batch Date/Time:**	4/8/18	10:16:00PM
Prep Batch ID:	1104485	**Prep Analyst:**	BALI	

Parameters:	Analysis Method	DF	MDL ug/m3	PQL ug/m3	Results ug/m3	Results ppbv	Q	Analyzed	Time	By	Analytical Batch
TPH-Gasoline	TO-15	1.00	40	180	851	241.76	x	04/09/18	23:32	BA	430884

NOTE: x - Does not match typical gasoline pattern. TPH value includes amount of non-target compounds within gasoline quantitative range.

Torrent LABORATORY, INC.

SAMPLE RESULTS

Report prepared for: Peter Langtry
Cornerstone Earth Group

Date/Time Received: 04/06/18, 4:30 pm
Date Reported: 04/11/18

Client Sample ID:	SV-2	**Lab Sample ID:**	1804065-002A
Project Name/Location:	1433 El Camino Real, Santa Clara	**Sample Matrix:**	Soil Vapor
Project Number:	P 7454		
Date/Time Sampled:	04/06/18 / 13:06	**Certified Clean WO # :**	
Canister/Tube ID:	A7562	**Received PSI :**	12.4
Collection Volume (L):		**Corrected PSI :**	
SDG:			

Prep Method:	TO15-P	**Prep Batch Date/Time:**	4/9/18	8:04:00PM
Prep Batch ID:	1104133	**Prep Analyst:**	BALI	

Parameters:	Analysis Method	DF	MDL ug/m3	PQL ug/m3	Results ug/m3	Results ppbv	Q	Analyzed	Time	By	Analytical Batch
Dichlorodifluoromethane	ETO15	1.00	1.6	2.5	ND	ND		04/10/18	0:03	BA	430884
1,1-Difluoroethane	ETO15	1.00	0.35	14	ND	ND		04/10/18	0:03	BA	430884
1,2-Dichlorotetrafluoroethane	ETO15	1.00	28	56	ND	ND		04/10/18	0:03	BA	430884
Chloromethane	ETO15	1.00	2.0	4.1	ND	ND		04/10/18	0:03	BA	430884
Vinyl Chloride	ETO15	1.00	0.23	1.3	ND	ND		04/10/18	0:03	BA	430884
1,3-Butadiene	ETO15	1.00	0.34	1.1	ND	ND		04/10/18	0:03	BA	430884
Bromomethane	ETO15	1.00	0.66	1.9	ND	ND		04/10/18	0:03	BA	430884
Chloroethane	ETO15	1.00	0.81	1.3	ND	ND		04/10/18	0:03	BA	430884
Trichlorofluoromethane	ETO15	1.00	0.56	2.8	ND	ND		04/10/18	0:03	BA	430884
1,1-Dichloroethene	ETO15	1.00	0.83	2.0	ND	ND		04/10/18	0:03	BA	430884
Freon 113	ETO15	1.00	1.0	3.8	ND	ND		04/10/18	0:03	BA	430884
Carbon Disulfide	ETO15	1.00	0.37	1.6	ND	ND		04/10/18	0:03	BA	430884
2-Propanol (Isopropyl Alcohol)	ETO15	1.00	1.3	12	ND	ND		04/10/18	0:03	BA	430884
Methylene Chloride	ETO15	1.00	0.70	10	ND	ND		04/10/18	0:03	BA	430884
Acetone	ETO15	1.00	0.40	12	ND	ND		04/10/18	0:03	BA	430884
trans-1,2-Dichloroethene	ETO15	1.00	0.48	2.0	ND	ND		04/10/18	0:03	BA	430884
Hexane	ETO15	1.00	0.46	1.8	ND	ND		04/10/18	0:03	BA	430884
MTBE	ETO15	1.00	0.44	1.8	ND	ND		04/10/18	0:03	BA	430884
tert-Butanol	ETO15	1.00	0.62	1.5	ND	ND		04/10/18	0:03	BA	430884
Diisopropyl ether (DIPE)	ETO15	1.00	0.74	2.1	ND	ND		04/10/18	0:03	BA	430884
1,1-Dichloroethane	ETO15	1.00	0.54	2.0	ND	ND		04/10/18	0:03	BA	430884
ETBE	ETO15	1.00	0.33	2.1	ND	ND		04/10/18	0:03	BA	430884
cis-1,2-Dichloroethene	ETO15	1.00	0.83	2.0	ND	ND		04/10/18	0:03	BA	430884
Chloroform	ETO15	1.00	0.97	2.4	ND	ND		04/10/18	0:03	BA	430884
Vinyl Acetate	ETO15	1.00	0.76	1.8	ND	ND		04/10/18	0:03	BA	430884
Carbon Tetrachloride	ETO15	1.00	1.1	3.1	ND	ND		04/10/18	0:03	BA	430884
1,1,1-Trichloroethane	ETO15	1.00	0.79	2.7	28	5.13		04/10/18	0:03	BA	430884
2-Butanone (MEK)	ETO15	1.00	0.39	1.5	ND	ND		04/10/18	0:03	BA	430884
Ethyl Acetate	ETO15	1.00	0.48	1.8	ND	ND		04/10/18	0:03	BA	430884
Tetrahydrofuran	ETO15	1.00	0.45	1.5	ND	ND		04/10/18	0:03	BA	430884
Benzene	ETO15	1.00	0.44	1.6	ND	ND		04/10/18	0:03	BA	430884
TAME	ETO15	1.00	0.67	2.1	ND	ND		04/10/18	0:03	BA	430884
1,2-Dichloroethane (EDC)	ETO15	1.00	0.42	2.0	ND	ND		04/10/18	0:03	BA	430884

Torrent LABORATORY, INC.

SAMPLE RESULTS

Report prepared for: Peter Langtry
Cornerstone Earth Group

Date/Time Received: 04/06/18, 4:30 pm
Date Reported: 04/11/18

Client Sample ID:	SV-2	**Lab Sample ID:**	1804065-002A
Project Name/Location:	1433 El Camino Real, Santa Clara	**Sample Matrix:**	Soil Vapor
Project Number:	P 7454		
Date/Time Sampled:	04/06/18 / 13:06	**Certified Clean WO # :**	
Canister/Tube ID:	A7562	**Received PSI :**	12.4
Collection Volume (L):		**Corrected PSI :**	
SDG:			

Prep Method:	TO15-P	**Prep Batch Date/Time:**	4/9/18	8:04:00PM
Prep Batch ID:	1104133	**Prep Analyst:**	BALI	

Parameters:	Analysis Method	DF	MDL ug/m3	PQL ug/m3	Results ug/m3	Results ppbv	Q	Analyzed	Time	By	Analytical Batch
Trichloroethylene	ETO15	1.00	0.81	2.7	ND	ND		04/10/18	0:03	BA	430884
1,2-Dichloropropane	ETO15	1.00	0.76	2.3	ND	ND		04/10/18	0:03	BA	430884
Bromodichloromethane	ETO15	1.00	0.74	3.4	ND	ND		04/10/18	0:03	BA	430884
1,4-Dioxane	ETO15	1.00	1.8	3.6	ND	ND		04/10/18	0:03	BA	430884
trans-1,3-Dichloropropene	ETO15	1.00	1.1	2.3	ND	ND		04/10/18	0:03	BA	430884
Toluene	ETO15	1.00	0.75	1.9	ND	ND		04/10/18	0:03	BA	430884
4-Methyl-2-Pentanone (MIBK)	ETO15	1.00	0.75	2.1	ND	ND		04/10/18	0:03	BA	430884
cis-1,3-Dichloropropene	ETO15	1.00	0.42	2.3	ND	ND		04/10/18	0:03	BA	430884
Tetrachloroethylene	ETO15	1.00	1.5	3.4	16	2.36		04/10/18	0:03	BA	430884
1,1,2-Trichloroethane	ETO15	1.00	0.58	2.7	ND	ND		04/10/18	0:03	BA	430884
Dibromochloromethane	ETO15	1.00	1.1	4.3	ND	ND		04/10/18	0:03	BA	430884
1,2-Dibromoethane (EDB)	ETO15	1.00	0.74	3.8	ND	ND		04/10/18	0:03	BA	430884
2-Hexanone	ETO15	1.00	0.65	2.1	ND	ND		04/10/18	0:03	BA	430884
Ethyl Benzene	ETO15	1.00	0.63	2.2	ND	ND		04/10/18	0:03	BA	430884
Chlorobenzene	ETO15	1.00	0.60	2.3	ND	ND		04/10/18	0:03	BA	430884
1,1,1,2-Tetrachloroethane	ETO15	1.00	0.84	3.4	ND	ND		04/10/18	0:03	BA	430884
m,p-Xylene	ETO15	1.00	0.98	2.2	ND	ND		04/10/18	0:03	BA	430884
o-Xylene	ETO15	1.00	0.30	2.2	ND	ND		04/10/18	0:03	BA	430884
Styrene	ETO15	1.00	0.46	2.1	ND	ND		04/10/18	0:03	BA	430884
Bromoform	ETO15	1.00	1.3	5.2	ND	ND		04/10/18	0:03	BA	430884
1,1,2,2-Tetrachloroethane	ETO15	1.00	0.82	3.4	ND	ND		04/10/18	0:03	BA	430884
4-Ethyl Toluene	ETO15	1.00	0.55	2.5	ND	ND		04/10/18	0:03	BA	430884
1,3,5-Trimethylbenzene	ETO15	1.00	0.30	2.5	ND	ND		04/10/18	0:03	BA	430884
1,2,4-Trimethylbenzene	ETO15	1.00	0.60	2.5	ND	ND		04/10/18	0:03	BA	430884
1,4-Dichlorobenzene	ETO15	1.00	0.75	3.0	ND	ND		04/10/18	0:03	BA	430884
1,3-Dichlorobenzene	ETO15	1.00	1.3	3.0	ND	ND		04/10/18	0:03	BA	430884
1,2-Dichlorobenzene	ETO15	1.00	1.1	3.0	ND	ND		04/10/18	0:03	BA	430884
Hexachlorobutadiene	ETO15	1.00	1.9	5.3	ND	ND		04/10/18	0:03	BA	430884
1,2,4-Trichlorobenzene	ETO15	1.00	2.2	3.7	ND	ND		04/10/18	0:03	BA	430884
Naphthalene	ETO15	1.00	1.3	2.6	ND	ND		04/10/18	0:03	BA	430884
(S) 4-Bromofluorobenzene	ETO15	1.00	50	150	110 %			04/10/18	0:03	BA	430884

Torrent LABORATORY, INC.

SAMPLE RESULTS

Report prepared for: Peter Langtry
Cornerstone Earth Group

Date/Time Received: 04/06/18, 4:30 pm
Date Reported: 04/11/18

Client Sample ID:	SV-2	**Lab Sample ID:**	1804065-002A
Project Name/Location:	1433 El Camino Real, Santa Clara	**Sample Matrix:**	Soil Vapor
Project Number:	P 7454		
Date/Time Sampled:	04/06/18 / 13:06	**Certified Clean WO # :**	
Canister/Tube ID:	A7562	**Received PSI :**	12.4
Collection Volume (L):		**Corrected PSI :**	
SDG:			

Prep Method:	TO15-GRO	**Prep Batch Date/Time:**	4/8/18	10:16:00PM
Prep Batch ID:	1104485	**Prep Analyst:**	BALI	

Parameters:	Analysis Method	DF	MDL ug/m3	PQL ug/m3	Results ug/m3	Results ppbv	Q	Analyzed	Time	By	Analytical Batch
TPH-Gasoline	TO-15	1.00	40	180	283	80.40	x	04/10/18	0:03	BA	430884

NOTE: x - Does not match typical gasoline pattern. TPH value includes amount of non-target compounds within gasoline quantitative range.

Torrent LABORATORY, INC.

SAMPLE RESULTS

Report prepared for: Peter Langtry
Cornerstone Earth Group

Date/Time Received: 04/06/18, 4:30 pm
Date Reported: 04/11/18

Client Sample ID:	SV-4	**Lab Sample ID:**	1804065-003A
Project Name/Location:	1433 El Camino Real, Santa Clara	**Sample Matrix:**	Soil Vapor
Project Number:	P 7454		
Date/Time Sampled:	04/06/18 / 13:44	**Certified Clean WO # :**	
Canister/Tube ID:	A7474	**Received PSI :**	13.5
Collection Volume (L):		**Corrected PSI :**	
SDG:			

Prep Method:	TO15-P	**Prep Batch Date/Time:**	4/9/18	8:04:00PM
Prep Batch ID:	1104133	**Prep Analyst:**	BALI	

Parameters:	Analysis Method	DF	MDL ug/m3	PQL ug/m3	Results ug/m3	Results ppbv	Q	Analyzed	Time	By	Analytical Batch
Dichlorodifluoromethane	ETO15	1.00	1.6	2.5	ND	ND		04/10/18	0:32	BA	430884
1,1-Difluoroethane	ETO15	1.00	0.35	14	ND	ND		04/10/18	0:32	BA	430884
1,2-Dichlorotetrafluoroethane	ETO15	1.00	28	56	ND	ND		04/10/18	0:32	BA	430884
Chloromethane	ETO15	1.00	2.0	4.1	ND	ND		04/10/18	0:32	BA	430884
Vinyl Chloride	ETO15	1.00	0.23	1.3	ND	ND		04/10/18	0:32	BA	430884
1,3-Butadiene	ETO15	1.00	0.34	1.1	ND	ND		04/10/18	0:32	BA	430884
Bromomethane	ETO15	1.00	0.66	1.9	ND	ND		04/10/18	0:32	BA	430884
Chloroethane	ETO15	1.00	0.81	1.3	ND	ND		04/10/18	0:32	BA	430884
Trichlorofluoromethane	ETO15	1.00	0.56	2.8	ND	ND		04/10/18	0:32	BA	430884
1,1-Dichloroethene	ETO15	1.00	0.83	2.0	ND	ND		04/10/18	0:32	BA	430884
Freon 113	ETO15	1.00	1.0	3.8	ND	ND		04/10/18	0:32	BA	430884
Carbon Disulfide	ETO15	1.00	0.37	1.6	ND	ND		04/10/18	0:32	BA	430884
2-Propanol (Isopropyl Alcohol)	ETO15	1.00	1.3	12	ND	ND		04/10/18	0:32	BA	430884
Methylene Chloride	ETO15	1.00	0.70	10	ND	ND		04/10/18	0:32	BA	430884
Acetone	ETO15	1.00	0.40	12	ND	ND		04/10/18	0:32	BA	430884
trans-1,2-Dichloroethene	ETO15	1.00	0.48	2.0	ND	ND		04/10/18	0:32	BA	430884
Hexane	ETO15	1.00	0.46	1.8	ND	ND		04/10/18	0:32	BA	430884
MTBE	ETO15	1.00	0.44	1.8	ND	ND		04/10/18	0:32	BA	430884
tert-Butanol	ETO15	1.00	0.62	1.5	ND	ND		04/10/18	0:32	BA	430884
Diisopropyl ether (DIPE)	ETO15	1.00	0.74	2.1	ND	ND		04/10/18	0:32	BA	430884
1,1-Dichloroethane	ETO15	1.00	0.54	2.0	ND	ND		04/10/18	0:32	BA	430884
ETBE	ETO15	1.00	0.33	2.1	ND	ND		04/10/18	0:32	BA	430884
cis-1,2-Dichloroethene	ETO15	1.00	0.83	2.0	ND	ND		04/10/18	0:32	BA	430884
Chloroform	ETO15	1.00	0.97	2.4	ND	ND		04/10/18	0:32	BA	430884
Vinyl Acetate	ETO15	1.00	0.76	1.8	ND	ND		04/10/18	0:32	BA	430884
Carbon Tetrachloride	ETO15	1.00	1.1	3.1	ND	ND		04/10/18	0:32	BA	430884
1,1,1-Trichloroethane	ETO15	1.00	0.79	2.7	4.7	0.86		04/10/18	0:32	BA	430884
2-Butanone (MEK)	ETO15	1.00	0.39	1.5	1.6	0.54		04/10/18	0:32	BA	430884
Ethyl Acetate	ETO15	1.00	0.48	1.8	ND	ND		04/10/18	0:32	BA	430884
Tetrahydrofuran	ETO15	1.00	0.45	1.5	ND	ND		04/10/18	0:32	BA	430884
Benzene	ETO15	1.00	0.44	1.6	ND	ND		04/10/18	0:32	BA	430884
TAME	ETO15	1.00	0.67	2.1	ND	ND		04/10/18	0:32	BA	430884
1,2-Dichloroethane (EDC)	ETO15	1.00	0.42	2.0	ND	ND		04/10/18	0:32	BA	430884

Torrent LABORATORY, INC.

SAMPLE RESULTS

Report prepared for: Peter Langtry
Cornerstone Earth Group

Date/Time Received: 04/06/18, 4:30 pm
Date Reported: 04/11/18

Client Sample ID:	SV-4	**Lab Sample ID:**	1804065-003A
Project Name/Location:	1433 El Camino Real, Santa Clara	**Sample Matrix:**	Soil Vapor
Project Number:	P 7454		
Date/Time Sampled:	04/06/18 / 13:44	**Certified Clean WO # :**	
Canister/Tube ID:	A7474	**Received PSI :**	13.5
Collection Volume (L):		**Corrected PSI :**	
SDG:			

Prep Method:	TO15-P	**Prep Batch Date/Time:**	4/9/18	8:04:00PM
Prep Batch ID:	1104133	**Prep Analyst:**	BALI	

Parameters:	Analysis Method	DF	MDL ug/m3	PQL ug/m3	Results ug/m3	Results ppbv	Q	Analyzed	Time	By	Analytical Batch
Trichloroethylene	ETO15	1.00	0.81	2.7	ND	ND		04/10/18	0:32	BA	430884
1,2-Dichloropropane	ETO15	1.00	0.76	2.3	ND	ND		04/10/18	0:32	BA	430884
Bromodichloromethane	ETO15	1.00	0.74	3.4	ND	ND		04/10/18	0:32	BA	430884
1,4-Dioxane	ETO15	1.00	1.8	3.6	ND	ND		04/10/18	0:32	BA	430884
trans-1,3-Dichloropropene	ETO15	1.00	1.1	2.3	ND	ND		04/10/18	0:32	BA	430884
Toluene	ETO15	1.00	0.75	1.9	ND	ND		04/10/18	0:32	BA	430884
4-Methyl-2-Pentanone (MIBK)	ETO15	1.00	0.75	2.1	ND	ND		04/10/18	0:32	BA	430884
cis-1,3-Dichloropropene	ETO15	1.00	0.42	2.3	ND	ND		04/10/18	0:32	BA	430884
Tetrachloroethylene	ETO15	1.00	1.5	3.4	6.0	0.88		04/10/18	0:32	BA	430884
1,1,2-Trichloroethane	ETO15	1.00	0.58	2.7	ND	ND		04/10/18	0:32	BA	430884
Dibromochloromethane	ETO15	1.00	1.1	4.3	ND	ND		04/10/18	0:32	BA	430884
1,2-Dibromoethane (EDB)	ETO15	1.00	0.74	3.8	ND	ND		04/10/18	0:32	BA	430884
2-Hexanone	ETO15	1.00	0.65	2.1	ND	ND		04/10/18	0:32	BA	430884
Ethyl Benzene	ETO15	1.00	0.63	2.2	ND	ND		04/10/18	0:32	BA	430884
Chlorobenzene	ETO15	1.00	0.60	2.3	ND	ND		04/10/18	0:32	BA	430884
1,1,1,2-Tetrachloroethane	ETO15	1.00	0.84	3.4	ND	ND		04/10/18	0:32	BA	430884
m,p-Xylene	ETO15	1.00	0.98	2.2	ND	ND		04/10/18	0:32	BA	430884
o-Xylene	ETO15	1.00	0.30	2.2	ND	ND		04/10/18	0:32	BA	430884
Styrene	ETO15	1.00	0.46	2.1	ND	ND		04/10/18	0:32	BA	430884
Bromoform	ETO15	1.00	1.3	5.2	ND	ND		04/10/18	0:32	BA	430884
1,1,2,2-Tetrachloroethane	ETO15	1.00	0.82	3.4	ND	ND		04/10/18	0:32	BA	430884
4-Ethyl Toluene	ETO15	1.00	0.55	2.5	ND	ND		04/10/18	0:32	BA	430884
1,3,5-Trimethylbenzene	ETO15	1.00	0.30	2.5	ND	ND		04/10/18	0:32	BA	430884
1,2,4-Trimethylbenzene	ETO15	1.00	0.60	2.5	ND	ND		04/10/18	0:32	BA	430884
1,4-Dichlorobenzene	ETO15	1.00	0.75	3.0	ND	ND		04/10/18	0:32	BA	430884
1,3-Dichlorobenzene	ETO15	1.00	1.3	3.0	ND	ND		04/10/18	0:32	BA	430884
1,2-Dichlorobenzene	ETO15	1.00	1.1	3.0	ND	ND		04/10/18	0:32	BA	430884
Hexachlorobutadiene	ETO15	1.00	1.9	5.3	ND	ND		04/10/18	0:32	BA	430884
1,2,4-Trichlorobenzene	ETO15	1.00	2.2	3.7	ND	ND		04/10/18	0:32	BA	430884
Naphthalene	ETO15	1.00	1.3	2.6	ND	ND		04/10/18	0:32	BA	430884
(S) 4-Bromofluorobenzene	ETO15	1.00	50	150	110 %			04/10/18	0:32	BA	430884

Torrent LABORATORY, INC.

SAMPLE RESULTS

Report prepared for: Peter Langtry
Cornerstone Earth Group

Date/Time Received: 04/06/18, 4:30 pm
Date Reported: 04/11/18

Client Sample ID:	SV-4	**Lab Sample ID:**	1804065-003A
Project Name/Location:	1433 El Camino Real, Santa Clara	**Sample Matrix:**	Soil Vapor
Project Number:	P 7454		
Date/Time Sampled:	04/06/18 / 13:44	**Certified Clean WO # :**	
Canister/Tube ID:	A7474	**Received PSI :**	13.5
Collection Volume (L):		**Corrected PSI :**	
SDG:			

Prep Method:	TO15-GRO	**Prep Batch Date/Time:**	4/8/18	10:16:00PM
Prep Batch ID:	1104485	**Prep Analyst:**	BALI	

Parameters:	Analysis Method	DF	MDL ug/m3	PQL ug/m3	Results ug/m3	Results ppbv	Q	Analyzed	Time	By	Analytical Batch
TPH-Gasoline	TO-15	1.00	40	180	829	235.51	x	04/10/18	0:32	BA	430884

NOTE: x - Does not match typical gasoline pattern. TPH value includes amount of non-target compounds within gasoline quantitative range.

Torrent LABORATORY, INC.

SAMPLE RESULTS

Report prepared for: Peter Langtry
Cornerstone Earth Group

Date/Time Received: 04/06/18, 4:30 pm
Date Reported: 04/11/18

Client Sample ID:	SV-3	**Lab Sample ID:**	1804065-004A
Project Name/Location:	1433 El Camino Real, Santa Clara	**Sample Matrix:**	Soil Vapor
Project Number:	P 7454		
Date/Time Sampled:	04/06/18 / 14:27	**Certified Clean WO # :**	
Canister/Tube ID:	A7473	**Received PSI :**	12.9
Collection Volume (L):		**Corrected PSI :**	
SDG:			

Prep Method:	TO15-P	**Prep Batch Date/Time:**	4/9/18	8:04:00PM
Prep Batch ID:	1104133	**Prep Analyst:**	BALI	

Parameters:	Analysis Method	DF	MDL ug/m3	PQL ug/m3	Results ug/m3	Results ppbv	Q	Analyzed	Time	By	Analytical Batch
Dichlorodifluoromethane	ETO15	1.00	1.6	2.5	ND	ND		04/10/18	1:02	BA	430884
1,1-Difluoroethane	ETO15	1.00	0.35	14	ND	ND		04/10/18	1:02	BA	430884
1,2-Dichlorotetrafluoroethane	ETO15	1.00	28	56	ND	ND		04/10/18	1:02	BA	430884
Chloromethane	ETO15	1.00	2.0	4.1	ND	ND		04/10/18	1:02	BA	430884
Vinyl Chloride	ETO15	1.00	0.23	1.3	ND	ND		04/10/18	1:02	BA	430884
1,3-Butadiene	ETO15	1.00	0.34	1.1	ND	ND		04/10/18	1:02	BA	430884
Bromomethane	ETO15	1.00	0.66	1.9	ND	ND		04/10/18	1:02	BA	430884
Chloroethane	ETO15	1.00	0.81	1.3	ND	ND		04/10/18	1:02	BA	430884
Trichlorofluoromethane	ETO15	1.00	0.56	2.8	ND	ND		04/10/18	1:02	BA	430884
1,1-Dichloroethene	ETO15	1.00	0.83	2.0	ND	ND		04/10/18	1:02	BA	430884
Freon 113	ETO15	1.00	1.0	3.8	ND	ND		04/10/18	1:02	BA	430884
Carbon Disulfide	ETO15	1.00	0.37	1.6	ND	ND		04/10/18	1:02	BA	430884
2-Propanol (Isopropyl Alcohol)	ETO15	1.00	1.3	12	ND	ND		04/10/18	1:02	BA	430884
Methylene Chloride	ETO15	1.00	0.70	10	ND	ND		04/10/18	1:02	BA	430884
Acetone	ETO15	1.00	0.40	12	ND	ND		04/10/18	1:02	BA	430884
trans-1,2-Dichloroethene	ETO15	1.00	0.48	2.0	ND	ND		04/10/18	1:02	BA	430884
Hexane	ETO15	1.00	0.46	1.8	ND	ND		04/10/18	1:02	BA	430884
MTBE	ETO15	1.00	0.44	1.8	ND	ND		04/10/18	1:02	BA	430884
tert-Butanol	ETO15	1.00	0.62	1.5	ND	ND		04/10/18	1:02	BA	430884
Diisopropyl ether (DIPE)	ETO15	1.00	0.74	2.1	ND	ND		04/10/18	1:02	BA	430884
1,1-Dichloroethane	ETO15	1.00	0.54	2.0	ND	ND		04/10/18	1:02	BA	430884
ETBE	ETO15	1.00	0.33	2.1	ND	ND		04/10/18	1:02	BA	430884
cis-1,2-Dichloroethene	ETO15	1.00	0.83	2.0	ND	ND		04/10/18	1:02	BA	430884
Chloroform	ETO15	1.00	0.97	2.4	ND	ND		04/10/18	1:02	BA	430884
Vinyl Acetate	ETO15	1.00	0.76	1.8	ND	ND		04/10/18	1:02	BA	430884
Carbon Tetrachloride	ETO15	1.00	1.1	3.1	ND	ND		04/10/18	1:02	BA	430884
1,1,1-Trichloroethane	ETO15	1.00	0.79	2.7	17	3.11		04/10/18	1:02	BA	430884
2-Butanone (MEK)	ETO15	1.00	0.39	1.5	1.5	0.51		04/10/18	1:02	BA	430884
Ethyl Acetate	ETO15	1.00	0.48	1.8	ND	ND		04/10/18	1:02	BA	430884
Tetrahydrofuran	ETO15	1.00	0.45	1.5	ND	ND		04/10/18	1:02	BA	430884
Benzene	ETO15	1.00	0.44	1.6	ND	ND		04/10/18	1:02	BA	430884
TAME	ETO15	1.00	0.67	2.1	ND	ND		04/10/18	1:02	BA	430884
1,2-Dichloroethane (EDC)	ETO15	1.00	0.42	2.0	ND	ND		04/10/18	1:02	BA	430884

Torrent LABORATORY, INC.

SAMPLE RESULTS

Report prepared for: Peter Langtry
Cornerstone Earth Group

Date/Time Received: 04/06/18, 4:30 pm
Date Reported: 04/11/18

Client Sample ID:	SV-3	**Lab Sample ID:**	1804065-004A
Project Name/Location:	1433 El Camino Real, Santa Clara	**Sample Matrix:**	Soil Vapor
Project Number:	P 7454		
Date/Time Sampled:	04/06/18 / 14:27	**Certified Clean WO # :**	
Canister/Tube ID:	A7473	**Received PSI :**	12.9
Collection Volume (L):		**Corrected PSI :**	
SDG:			

Prep Method:	TO15-P	**Prep Batch Date/Time:**	4/9/18	8:04:00PM
Prep Batch ID:	1104133	**Prep Analyst:**	BALI	

Parameters:	Analysis Method	DF	MDL ug/m3	PQL ug/m3	Results ug/m3	Results ppbv	Q	Analyzed	Time	By	Analytical Batch
Trichloroethylene	ETO15	1.00	0.81	2.7	ND	ND		04/10/18	1:02	BA	430884
1,2-Dichloropropane	ETO15	1.00	0.76	2.3	ND	ND		04/10/18	1:02	BA	430884
Bromodichloromethane	ETO15	1.00	0.74	3.4	ND	ND		04/10/18	1:02	BA	430884
1,4-Dioxane	ETO15	1.00	1.8	3.6	ND	ND		04/10/18	1:02	BA	430884
trans-1,3-Dichloropropene	ETO15	1.00	1.1	2.3	ND	ND		04/10/18	1:02	BA	430884
Toluene	ETO15	1.00	0.75	1.9	ND	ND		04/10/18	1:02	BA	430884
4-Methyl-2-Pentanone (MIBK)	ETO15	1.00	0.75	2.1	ND	ND		04/10/18	1:02	BA	430884
cis-1,3-Dichloropropene	ETO15	1.00	0.42	2.3	ND	ND		04/10/18	1:02	BA	430884
Tetrachloroethylene	ETO15	1.00	1.5	3.4	18	2.65		04/10/18	1:02	BA	430884
1,1,2-Trichloroethane	ETO15	1.00	0.58	2.7	ND	ND		04/10/18	1:02	BA	430884
Dibromochloromethane	ETO15	1.00	1.1	4.3	ND	ND		04/10/18	1:02	BA	430884
1,2-Dibromoethane (EDB)	ETO15	1.00	0.74	3.8	ND	ND		04/10/18	1:02	BA	430884
2-Hexanone	ETO15	1.00	0.65	2.1	ND	ND		04/10/18	1:02	BA	430884
Ethyl Benzene	ETO15	1.00	0.63	2.2	ND	ND		04/10/18	1:02	BA	430884
Chlorobenzene	ETO15	1.00	0.60	2.3	ND	ND		04/10/18	1:02	BA	430884
1,1,1,2-Tetrachloroethane	ETO15	1.00	0.84	3.4	ND	ND		04/10/18	1:02	BA	430884
m,p-Xylene	ETO15	1.00	0.98	2.2	ND	ND		04/10/18	1:02	BA	430884
o-Xylene	ETO15	1.00	0.30	2.2	ND	ND		04/10/18	1:02	BA	430884
Styrene	ETO15	1.00	0.46	2.1	ND	ND		04/10/18	1:02	BA	430884
Bromoform	ETO15	1.00	1.3	5.2	ND	ND		04/10/18	1:02	BA	430884
1,1,2,2-Tetrachloroethane	ETO15	1.00	0.82	3.4	ND	ND		04/10/18	1:02	BA	430884
4-Ethyl Toluene	ETO15	1.00	0.55	2.5	ND	ND		04/10/18	1:02	BA	430884
1,3,5-Trimethylbenzene	ETO15	1.00	0.30	2.5	ND	ND		04/10/18	1:02	BA	430884
1,2,4-Trimethylbenzene	ETO15	1.00	0.60	2.5	ND	ND		04/10/18	1:02	BA	430884
1,4-Dichlorobenzene	ETO15	1.00	0.75	3.0	ND	ND		04/10/18	1:02	BA	430884
1,3-Dichlorobenzene	ETO15	1.00	1.3	3.0	ND	ND		04/10/18	1:02	BA	430884
1,2-Dichlorobenzene	ETO15	1.00	1.1	3.0	ND	ND		04/10/18	1:02	BA	430884
Hexachlorobutadiene	ETO15	1.00	1.9	5.3	ND	ND		04/10/18	1:02	BA	430884
1,2,4-Trichlorobenzene	ETO15	1.00	2.2	3.7	ND	ND		04/10/18	1:02	BA	430884
Naphthalene	ETO15	1.00	1.3	2.6	ND	ND		04/10/18	1:02	BA	430884
(S) 4-Bromofluorobenzene	ETO15	1.00	50	150	110 %			04/10/18	1:02	BA	430884

Torrent LABORATORY, INC.

SAMPLE RESULTS

Report prepared for: Peter Langtry
Cornerstone Earth Group

Date/Time Received: 04/06/18, 4:30 pm
Date Reported: 04/11/18

Client Sample ID:	SV-3	**Lab Sample ID:**	1804065-004A
Project Name/Location:	1433 El Camino Real, Santa Clara	**Sample Matrix:**	Soil Vapor
Project Number:	P 7454		
Date/Time Sampled:	04/06/18 / 14:27	**Certified Clean WO # :**	
Canister/Tube ID:	A7473	**Received PSI :**	12.9
Collection Volume (L):		**Corrected PSI :**	
SDG:			

Prep Method:	TO15-GRO	**Prep Batch Date/Time:**	4/8/18	10:16:00PM
Prep Batch ID:	1104485	**Prep Analyst:**	BALI	

Parameters:	Analysis Method	DF	MDL ug/m3	PQL ug/m3	Results ug/m3	Results ppbv	Q	Analyzed	Time	By	Analytical Batch
TPH-Gasoline	TO-15	1.00	40	180	264	75.00	x	04/10/18	1:02	BA	430884

NOTE: x - Does not match typical gasoline pattern. TPH value includes amount of non-target compounds within gasoline quantitative range.

Torrent LABORATORY, INC.

SAMPLE RESULTS

Report prepared for: Peter Langtry
Cornerstone Earth Group

Date/Time Received: 04/06/18, 4:30 pm
Date Reported: 04/11/18

Client Sample ID:	SV-3(IPA)	**Lab Sample ID:**	1804065-005A
Project Name/Location:	1433 El Camino Real, Santa Clara	**Sample Matrix:**	Soil Vapor
Project Number:	P 7454		
Date/Time Sampled:	04/06/18 / 14:27	**Certified Clean WO # :**	
Canister/Tube ID:	6323	**Received PSI :**	11.8
Collection Volume (L):		**Corrected PSI :**	
SDG:			

Prep Method:	TO15-P	**Prep Batch Date/Time:**	4/9/18	8:04:00PM
Prep Batch ID:	1104133	**Prep Analyst:**	BALI	

Parameters:	Analysis Method	DF	MDL ug/m3	PQL ug/m3	Results ug/m3	Results ppbv	Q	Analyzed	Time	By	Analytical Batch
2-Propanol (Isopropyl Alcohol)	ETO15	2,000	2600	25000	110000	44,715.45		04/10/18	12:58	BA	430884
(S) 4-Bromofluorobenzene	ETO15	2,000	50	150	92 %			04/10/18	12:58	BA	430884

MB Summary Report

Work Order:	1804065	**Prep Method:**	TO15-P	**Prep Date:**	04/09/18	**Prep Batch:**	1104133
Matrix:	Air	**Analytical Method:**	ETO15	**Analyzed Date:**	4/9/2018	**Analytical Batch:**	430884
Units:	ppbv						

Parameters	MDL	PQL	Method Blank Conc.	Lab Qualifier
Dichlorodifluoromethane	0.32	0.50	ND	
1,1-Difluoroethane	0.13	5.0	ND	
1,2-Dichlorotetrafluoroethane	4.0	8.0	ND	
Chloromethane	0.99	2.0	ND	
Vinyl Chloride	0.088	0.50	ND	
1,3-Butadiene	0.15	0.50	ND	
Bromomethane	0.17	0.50	0.17	
Chloroethane	0.31	0.50	ND	
Trichlorofluoromethane	0.099	0.50	ND	
1,1-Dichloroethene	0.21	0.50	ND	
Freon 113	0.13	0.50	ND	
Carbon Disulfide	0.12	0.50	ND	
2-Propanol (Isopropyl Alcohol)	0.52	5.0	ND	
Methylene Chloride	0.20	3.0	ND	
Acetone	0.17	5.0	ND	
trans-1,2-Dichloroethene	0.12	0.50	ND	
Hexane	0.13	0.50	ND	
MTBE	0.12	0.50	ND	
tert-Butanol	0.20	0.50	ND	
Diisopropyl ether (DIPE)	0.18	0.50	ND	
1,1-Dichloroethane	0.13	0.50	ND	
ETBE	0.078	0.50	ND	
cis-1,2-Dichloroethene	0.21	0.50	ND	
Chloroform	0.20	0.50	ND	
Vinyl Acetate	0.22	0.50	ND	
Carbon Tetrachloride	0.18	0.50	ND	
1,1,1-Trichloroethane	0.15	0.50	ND	
2-Butanone (MEK)	0.13	0.50	ND	
Ethyl Acetate	0.13	0.50	ND	
Tetrahydrofuran	0.15	0.50	ND	
Benzene	0.14	0.50	ND	
TAME	0.16	0.50	ND	
1,2-Dichloroethane (EDC)	0.10	0.50	ND	
Trichloroethylene	0.15	0.50	ND	
1,2-Dichloropropane	0.17	0.50	ND	
Bromodichloromethane	0.11	0.50	ND	
1,4-Dioxane	0.50	1.0	ND	
trans-1,3-Dichloropropene	0.23	0.50	ND	
Toluene	0.20	0.50	ND	
4-Methyl-2-Pentanone (MIBK)	0.18	0.50	ND	
cis-1,3-Dichloropropene	0.093	0.50	ND	
Tetrachloroethylene	0.22	0.50	ND	

MB Summary Report

Work Order:	1804065	**Prep Method:**	TO15-P	**Prep Date:**	04/09/18	**Prep Batch:**	1104133
Matrix:	Air	**Analytical Method:**	ETO15	**Analyzed Date:**	4/9/2018	**Analytical Batch:**	430884
Units:	ppbv						

Parameters	MDL	PQL	Method Blank Conc.	Lab Qualifier
1,1,2-Trichloroethane	0.11	0.50	ND	
Dibromochloromethane	0.13	0.50	ND	
1,2-Dibromoethane (EDB)	0.096	0.50	ND	
2-Hexanone	0.16	0.50	ND	
Ethyl Benzene	0.15	0.50	ND	
Chlorobenzene	0.13	0.50	ND	
1,1,1,2-Tetrachloroethane	0.12	0.50	ND	
m,p-Xylene	0.23	0.50	ND	
o-Xylene	0.070	0.50	ND	
Styrene	0.11	0.50	ND	
Bromoform	0.13	0.50	ND	
1,1,2,2-Tetrachloroethane	0.12	0.50	ND	
4-Ethyl Toluene	0.11	0.50	ND	
1,3,5-Trimethylbenzene	0.061	0.50	ND	
1,2,4-Trimethylbenzene	0.12	0.50	ND	
1,4-Dichlorobenzene	0.12	0.50	ND	
1,3-Dichlorobenzene	0.22	0.50	ND	
1,2-Dichlorobenzene	0.18	0.50	ND	
Hexachlorobutadiene	0.17	0.50	ND	
1,2,4-Trichlorobenzene	0.29	0.50	ND	
Naphthalene	0.24	0.50	ND	
(S) 4-Bromofluorobenzene			100	

Work Order:	1804065	**Prep Method:**	TO15-GRO	**Prep Date:**	04/08/18	**Prep Batch:**	1104485
Matrix:	Air	**Analytical Method:**	ETO15	**Analyzed Date:**	4/9/2018	**Analytical Batch:**	430884
Units:	ppbv						

Parameters	MDL	PQL	Method Blank Conc.	Lab Qualifier
TPH-Gasoline	11	50	26	

LCS/LCSD Summary Report

Raw values are used in quality control assessment.

Work Order:	1804065	**Prep Method:**	TO15-P	**Prep Date:**	04/09/18	**Prep Batch:**	1104133
Matrix:	Air	**Analytical Method:**	ETO15	**Analyzed Date:**	4/9/2018	**Analytical Batch:**	430884
Units:	ppbv						

Parameters	MDL	PQL	Method Blank Conc.	Spike Conc.	LCS % Recovery	LCSD % Recovery	LCS/LCSD % RPD	% Recovery Limits	% RPD Limits	Lab Qualifier
1,1-Dichloroethene	0.21	0.50	ND	8.00	114	108	4.85	65 - 135	30	
Benzene	0.14	0.50	ND	8.00	101	95.7	5.09	65 - 135	30	
Trichloroethylene	0.15	0.50	ND	8.00	92.1	90.5	1.78	65 - 135	30	
Toluene	0.20	0.50	ND	8.00	97.6	94.7	2.99	65 - 135	30	
Chlorobenzene	0.13	0.50	ND	8.00	96.8	92.3	4.89	65 - 135	30	
(S) 4-Bromofluorobenzene				20.0	99.5	99.9		50 - 150		

Work Order:	1804065	**Prep Method:**	TO15-GRO	**Prep Date:**	04/08/18	**Prep Batch:**	1104485
Matrix:	Air	**Analytical Method:**	ETO15	**Analyzed Date:**	4/10/2018	**Analytical Batch:**	430884
Units:	ppbv						

Parameters	MDL	PQL	Method Blank Conc.	Spike Conc.	LCS % Recovery	LCSD % Recovery	LCS/LCSD % RPD	% Recovery Limits	% RPD Limits	Lab Qualifier
TPH-Gasoline	11	50	26	500	100	100.	0.000	65 - 135	30	

Laboratory Qualifiers and Definitions

DEFINITIONS:

Accuracy/Bias (% Recovery) - The closeness of agreement between an observed value and an accepted reference value.
Blank (Method/Preparation Blank) -MB/PB - An analyte-free matrix to which all reagents are added in the same volumes/proportions as used in sample processing. The method blank is used to document contamination resulting from the analytical process.
Duplicate - a field sample and/or laboratory QC sample prepared in duplicate following all of the same processes and procedures used on the original sample (sample duplicate, LCSD, MSD)
Laboratory Control Sample (LCS ad LCSD) - A known matrix spiked with compounds representative of the target analyte(s). This is used to document laboratory performance.
Matrix - the component or substrate that contains the analyte of interest (e.g., - groundwater, sediment, soil, waste water, etc)
Matrix Spike (MS/MSD) - Client sample spiked with identical concentrations of target analyte (s). The spiking occurs prior to the sample preparation and analysis. They are used to document the precision and bias of a method in a given sample matrix.
Method Detection Limit (MDL) - the minimum concentration of a substance that can be measured and reported with a 99% confidence that the analyte concentration is greater than zero
Practical Quantitation Limit/Reporting Limit/Limit of Quantitation (PQL/RL/LOQ) - a laboratory determined value at 2 to 5 times above the MDL that can be reproduced in a manner that results in a 99% confidence level that the result is both accurate and precise. PQLs/RLs/LODs reflect all preparation factors and/or dilution factors that have been applied to the sample during the preparation and/or analytical processes.
Precision (%RPD) - The agreement among a set of replicate/duplicate measurements without regard to known value of the replicates
Surrogate (S) or (Surr) - An organic compound which is similar to the target analyte(s) in chemical composition and behavior in the analytical process, but which is not normally found in environmental samples. Surrogates are used in most organic analysis to demonstrate matrix compatibility with the chosen method of analysis
Tentatively Identified Compound (TIC) - A compound not contained within the analytical calibration standards but present in the GCMS library of defined compounds. When the library is searched for an unknown compound, it can frequently give a tentative identification to the compound based on retention time and primary and secondary ion match. TICs are reported as estimates and are candidates for further investigation.
Units: the unit of measure used to express the reported result - **mg/L** and ***mg/Kg*** (equivalent to PPM - parts per million in **liquid** and ***solid***), **ug/L** and ***ug/Kg*** (equivalent to PPB - parts per billion in **liquid** and ***solid***), **ug/m3**, ***mg/m3***, **ppbv** and ***ppmv*** (all units of measure for reporting concentrations in air), **%** (equivalent to 10000 ppm or 1,000,000 ppb), **ug/Wipe** (concentration found on the surface of a single Wipe usually taken over a 100cm2 surface)

LABORATORY QUALIFIERS:

B - Indicates when the analyte is found in the associated method or preparation blank
D - Surrogate is not recoverable due to the necessary dilution of the sample
E - Indicates the reportable value is outside of the calibration range of the instrument but within the linear range of the instrument (unless otherwise noted) Values reported with an E qualifier should be considered as estimated.
H- Indicates that the recommended holding time for the analyte or compound has been exceeded
J- Indicates a value between the method MDL and PQL and that the reported concentration should be considered as estimated rather the quantitative
NA - Not Analyzed
N/A - Not Applicable
ND - Not Detected at a concentration greater than the PQL/RL or, if reported to the MDL, at greater than the MDL.
NR - Not recoverable - a matrix spike concentration is not recoverable due to a concentration within the original sample that is greater than four times the spike concentration added
R- The % RPD between a duplicate set of samples is outside of the absolute values established by laboratory control charts
S- Spike recovery is outside of established method and/or laboratory control limits. Further explanation of the use of this qualifier should be included within a case narrative
X -Used to indicate that a value based on pattern identification is within the pattern range but not typical of the pattern found in standards. Further explanation may or may not be provided within the sample footnote and/or the case narrative.

Sample Receipt Checklist

Client Name: Cornerstone Earth Group

Project Name: 1433 El Camino Real, Santa Clara

Work Order No.: 1804065

Date and Time Received: 4/6/2018 4:30:00PM

Received By: Navin Ghodasara

Physically Logged By: Navin Ghodasara

Checklist Completed By: Navin Ghodasara

Carrier Name: Client Drop Off

Chain of Custody (COC) Information

Chain of custody present?	Yes
Chain of custody signed when relinquished and received?	Yes
Chain of custody agrees with sample labels?	Yes
Custody seals intact on sample bottles?	Not Present

Sample Receipt Information

Custody seals intact on shipping container/cooler?	Not Present
Shipping Container/Cooler In Good Condition?	Yes
Samples in proper container/bottle?	Yes
Samples containers intact?	Yes
Sufficient sample volume for indicated test?	Yes

Sample Preservation and Hold Time (HT) Information

All samples received within holding time?	Yes	
Container/Temp Blank temperature in compliance?	Temperature:	°C
Water-VOA vials have zero headspace?	No VOA vials submitted	
Water-pH acceptable upon receipt?	N/A	

pH Checked by: na

pH Adjusted by: na

Comments:

Login Summary Report

Client ID: TL5119 Cornerstone Earth Group

Project Name: 1433 El Camino Real, Santa Clara

Project # : P 7454

Report Due Date: 4/24/2018

QC Level: II

TAT Requested: 3 Day Std:3

Date Received: 4/6/2018

Time Received: 4:30 pm

Comments:

Work Order # : ***1804065***

WO Sample ID	Client Sample ID	Collection Date/Time	Matrix	Scheduled Disposal	Sample On Hold	Test On Hold	Requested Tests	Subbed
1804065-001A	SV-1	04/06/18 12:24	Air				VOC_A_TO15 VOC_A_TO15GRO	
1804065-002A	SV-2	04/06/18 13:06	Air				VOC_A_TO15 VOC_A_TO15GRO	
1804065-003A	SV-4	04/06/18 13:44	Air				VOC_A_TO15 VOC_A_TO15GRO	
1804065-004A	SV-3	04/06/18 14:27	Air				VOC_A_TO15 VOC_A_TO15GRO	
1804065-005A	SV-3(IPA)	04/06/18 14:27	Air				VOC_A_TO15	

Sample Note: IPA only (shroud)

Torrent LABORATORY, INC.

Torrent LABORATORY, INC.
483 Sinclair Frontage Road
Milpitas, CA 95035
Phone: 408.263.5258
Fax: 408.263.8293
www.torrentlab.com

CHAIN OF CUSTODY

• NOTE: SHADED AREAS ARE FOR TORRENT LAB USE ONLY •

LAB WORK ORDER NO: 1804065

Company Name: Cornerstone Earth Group ☐ Env. ☐ Special
Address: 1259 Oakmead Pky
City: Sunnyvale State: CA Zip Code: 94089
Telephone: 925 988 9500 Cell:
REPORT TO: Peter Langtry ~~BILL TO~~: cc. Sarah Kuehn

Project #: P7454 PO#:
Project Name: 1433 El Camino Real, Santa Clara
Comments:
SAMPLER: Ross Tinline
EMAIL: plangtry@cornerstoneearth.com skuehn@cornerstoneearth.com

TURNAROUND TIME: ☐ 10 Work Days ☐ 4 Work Days ☐ 1 Work Day ☐ 7 Work Days ☒ 3 Work Days ☐ Noon - Nxt Day ☐ 5 Work Days ☐ 2 Work Days ☐ 2 - 8 Hours

SAMPLE TYPE: SV ☒ Air ☐ Storm Water ☐ Waste Water ☐ Wipe ☐ Ground Water ☐ Other ☐ Soil ☐ Product / Bulk

REPORT FORMAT: ☐ Level II - Std. ☐ Excel - EDD ☐ EDF ☐ Std.-EDD ☐ QC Level III ☐ QC Level IV

ANALYSIS REQUESTED

LAB ID	CANISTER I.D.	CLIENT'S SAMPLE I.D.	DATE / TIME SAMPLED	MATRIX	# OF CONT	CONT TYPE	TPHgt VOCs by TO15	2 Propanol only (TO15)				Initial Vac "Hg	Final Vac "Hg	Flow Controller #	REMARKS
001A	N1424	SV-1	4-6-18 1218-1224	SV	1	1L summa	X					28.5	4.5	E29	
002A	A7562	SV-2	4-6-18 1300-1306	SV	1	1L summa	X					28.5	3.0	E13	
003A	A7474	SV-4	4-6-18 1337-1344	SV	1	1L summa	X					29.8	4.0	—	
004A	A7473	SV-3	4-6-18 1421-1427	SV	1	1L summa	X					29.5	4.0	E15	
005A	6323	SV-3 (IPA)	4-6-18 1422-1427	Shroud Atm	1	1L summa		X				28.5	6.0	—	

	Relinquished By:	Print:	Date:	Time:	Received By:	Print:	Date:	Time:
1	[signature]	4-6-18	4-6-18	1630	[signature]	NAVIN G	4-6-18	1630
2								

Were Samples Received in Good Condition? ☒ Yes ☐ NO Samples on Ice? ☐ Yes ☒ NO Method of Shipment D/O Sample seals intact? ☐ Yes ☐ NO ☒ N/A

NOTE: Samples are discarded by the laboratory 30 days from date of receipt unless other arrangements are made.

Log In By: [signature] Date: 4-6-18 Labeled By: [signature] Date: 4-6-18 Temp Ambient Temp. °C Page 1 of 1 Rev. 3